FLUIDRA

# POOL & SPA

GENERAL CATALOGUE
**RESIDENTIAL**
**2024**

ASTRALPOOL® CEPEX® ZODIAC® ctx® pro

FLUIDRA

THE PERFECT POOL EXPERIENCE

We are a leader in the global pool industry. Our portfolio includes some of the most trusted brands, including Jandy®, AstralPool®, Polaris®, Cepex®, Zodiac®, CTX Professional® and Gre®. We offer our customers an expansive array of products across both the residential and commercial pool and wellness markets, and we have a strong geographical footprint with operations in 47 countries.

We have over 6,500 employees and the necessary resources to accelerate innovation in critical areas like energy-efficiency, robotics and the Internet of Things.

Recently, we introduced our **2020-2026 Environmental, Social and Governance (ESG)** Plan, our Responsibility Blueprint. This plan aims to integrate principles of sustainability, social fairness and responsible corporate governance into the way we conduct our business globally as well as in the local communities we operate within. We are convinced that a company with high ESG standards is a more economically sustainable company and one that is more highly valued by its customers, employees and shareholders.

To reflect our ESG focus, we have made an important change to our company mission, as well as added a new vision.

Our mission, which is what drives us every morning we come to work, is: **To create the perfect pool experience responsibly**.

And our vision, which is the motivating reason why we do what we do every day, is: **To enhance lives through innovative and sustainable solutions that transform the way people enjoy water for recreation and health**.

As part of our ambitious **strategic plan**, we are looking forward with the goal to drive the evolution of the pool and wellness space. This plan puts focus on leveraging our **IT infrastructure** as a competitive advantage; advancing **digital solutions** to make owning and working on a pool easier and more enjoyable; utilizing and commercializing our **data** to generate business opportunities; and simplifying our **internal processes** to make us easier to do business with. By meeting these objectives, we will not only enhance the pool experience for our customers, but also reinforce our dynamic company culture and position our organization for future growth.

# Key figures

€2,389MM

Sales

€512MM

EBITDA

+6,500

Employees

47

Countries

+135

Sales branches

+40

Production centers

# A global powerhouse

| 40% | 44% | 16% |
|---|---|---|
| Europe | US | Rest of the world |

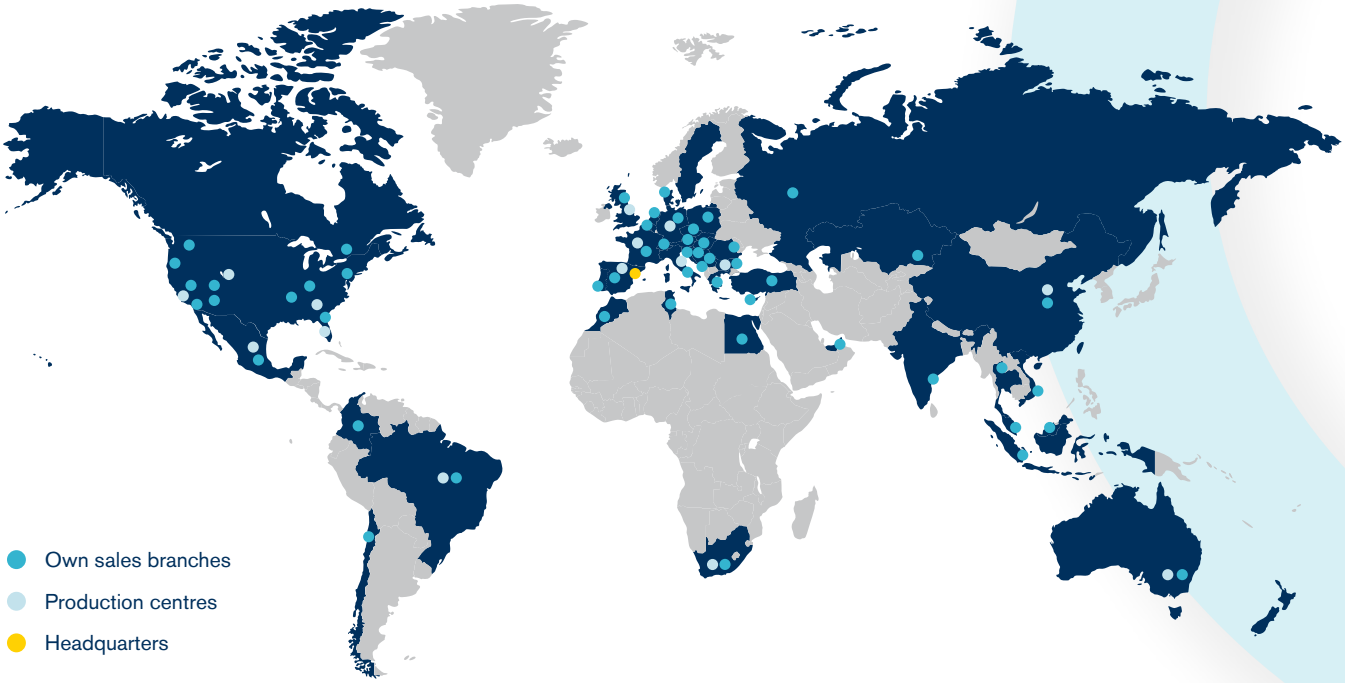


# Highly recognized brands

Jandy
ASTRALPOOL
Polaris
ZODIAC
BARACUDA
Gre
AQUA PRODUCTS
COVER POOLS
CEPEX
ctx pro
SR Smith
AQUA FORTE
GRAND EFFECTS
FLUIDRA POOL
PISCINE LAGHETTO
taylor

# NEW PRODUCTS 2024

## iQBridge RS

FLUIDRA POOL

+ Plug & Play Wi-Fi gateway.
+ Compatible with a selection of AstralPool & Zodiac heat pumps and salt water clhorinators.
+ Get remote control using the Fluidra Pool app.

See page 22

## iQBridge ZB

FLUIDRA POOL

+ Wireless gateway solution.
+ Transforms Bluetooth connected products into cloud-connected products.
+ Seamless app control.

See page 23

## Smart Plug

FLUIDRA POOL

+ Watertight Smart Plug.
+ Plug & Play control over Bluetooth.
+ Designed for filter pumps, lighting, or salt-water chlorinator control.

See page 23

## Command Connect Compact & Advance

ASTRALPOOL

+ Connected filtration cabinets.
+ Built-in dual channel smart relay to control the filter pump and lighting.
+ Controlled using the Fluidra Pool app over Bluetooth.

See page 26

## Easycolor skimmer STD sheats

ASTRALPOOL

+ Latest launch to complete Easycolor range.
+ 4 colors available.
+ Easy installation.

See page 110

## Nozzles (Wall and bottom)

ASTRALPOOL

+ 4 colors available.
+ Wall: Fast and easy replacement for installed nozzles.
+ Bottom: Improved performance.

See page 131 and 135

# NEW PRODUCTS 2024

## LumiPlus Connect

ASTRALPOOL

+ Simple: Empower your lighting experience.
+ Smart: Absolute control wherever you are.
+ Efficient: We put the focus on efficiency.

See page 161

## LumiPlus Plug&Play

ASTRALPOOL

+ Simple: Easy pool light control.
+ Smart: Lighting under control.
+ Efficient: The most reliable remote control.

See page 163

## Ronda Pro

ASTRALPOOL

+ Rapid installation.
+ Easy maintenance.
+ Premium quality.

See page 201

## Verdon VS

ASTRALPOOL

+ Energy savings.
+ Silent.
+ Full control anywhere and anytime.

See page 250

## Senext XP

ASTRALPOOL

+ Small-sized to fit everywhere.
+ Big performance.
+ Easy installation and maintenance.

See page 253

## AstralPool Spa Collection

ASTRALPOOL

+ A complete range for the care and maintenance of SPAS.
+ Look&Feel linked to SPA World.

See page 330

## Water testing strips

ctx pro ASTRALPOOL

+ A complete professional range to measure key water parameters to maintain water in optimal conditions.
+ Under CTX and AstralPool brands.
+ Made in USA.

See page 321 and 342

# NEW PRODUCTS 2024

## Elite Connect

ASTRALPOOL

+ Controls the water quality and the pool equipment through one single interface.
+ Unrivalled upgradeability.
+ Integrated connectivity.

See page 358

## Energy Connect

ASTRALPOOL

+ Connected, unconditionally.
+ Designed to last and adapt to every situation.
+ Easy to install, simple to use.
+ Optimal bathing comfort without any chemical adjustment.

See page 360

## Neolysis Connect

ASTRALPOOL

+ Exclusive hybrid UV + salt water treatment.
+ Total pool control.
+ Exists in Low Salinity Version.
+ Integrated connectivity.

See page 364

## Control Connect All-in-One

ASTRALPOOL

+ All inclusive multiparameter solution.
+ Ready-to-install pool control.
+ Premium grade.
+ Easy to use.

See page 369

## SWY 3500 - SWEEPY®

ZODIAC®

+ Designed for simple pool needs.
+ Cyclonic suction.
+ Easy to use.

See page 421

## OP-Li 2100 - PIXEL™

ZODIAC®

+ Cordless freedom.
+ Efficient cleaning.
+ Effortless handling: easy maintenance and lightweight.

See page 440

# NEW PRODUCTS 2024

## RF 5200 iQ - FREERIDER™

ZODIAC

+ Cordless freedom.
+ Cyclonic performance.
+ Easy to use and simple water retrieval.

See page 443

## RF 5600 iQ - FREERIDER™

ZODIAC

+ Cordless freedom.
+ Cyclonic performance.
+ Easy to use: Patented Lift System with the Lifi remote control.

See page 445

## Z260iQ

ZODIAC

+ R290 refrigerant greener gas.
+ Simple & Efficient.
+ Suits most pools.
+ Embedded connectivity.

See page 481

## Z250iQ

ZODIAC

+ Simple & Efficient.
+ Wide range of powers.
+ Embedded connectivity.

See page 482

## DF2 DUCTED

ZODIAC

+ Horizontal ducted installation.
+ Available in 5 capacities.
+ Titanium condenser version & Air heating options.

See page 534

## DF2 THROUGH THE WALL

ZODIAC

+ Hidden installation without ducts.
+ Available in 5 capacities.
+ Titanium condenser version & Air heating option.

See page 540

## Origins Spa Range

ASTRALPOOL

+ The desired simplicity.
+ The best cost-price ratio range.
+ With all the AstralPool quality.

See page 623

FLUIDRA

# *Creating* A MORE SUSTAINABLE POOL

From the cars they drive to the products they buy, consumers are increasingly looking to invest in more efficient and cost-saving technologies.

Fluidra® offers a complete pool product system that helps prevent water loss, offers greater energy efficiency and significantly reduces the need for chemicals. Practical solutions that also bring down a pool's operating costs.

# Start With the Core Four

Four product solutions that increase a pool's overall efficiency while reducing operating costs.

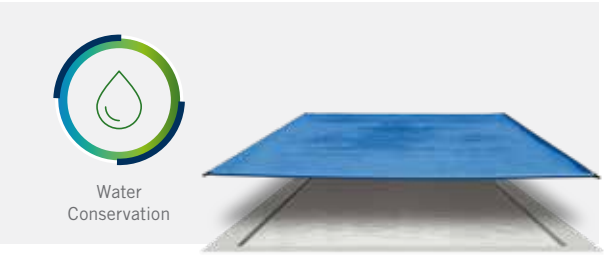


Pool Covers

## Prevent up to 90% of Water Loss

Pool Cover prevents around 90% of water loss due to water evaporation* saving up to 4000L of water per month**

*During season (122 days) pool is covered when it is not used (we assume 70% of the time using an Automatic Pool Cover). Out of season, we considered the pool is covered all the time
**Calculation based on a 8x4m pool with a surface area of 32 $m^2$ evaporating at 4.2 cm per week.

Variable-Speed Pumps

## 60% Greater Efficiency

Variable-speed pumps are 60% more efficient when compared to traditional single-speed pumps, saving more than 700 kW / year*.

* Average saving with AstralPool & Zodiac variable speed pumps on a 50 $m^3$ pool with a 6 months bathing season, compared to the same pool equipped with a 1 HP single speed pump. Refer to energy savings calculators available on www.astralpool.com & www.zodiac-poolcare.com

Salt Water Chlorinators

## Reduce Chlorine use by 100%

Salt Water Chlorinators are self-generating chlorine dispensers which can cut the need for any disinfection chemicals by 100%* as they naturally generate it from the small amount of salt present in pool's water.

* What we avoid is the use of chlorine-based chemicals or any other disinfection chemicals in normal conditions, chemicals for water balance or shock treatment may still be required (eg. pH minus, algaecides, etc.) like for any pool.

Cartridge Filters

## 600L of Water Savings

When it comes to pool filtration, cartridge filters are the most water-efficient because they do not require backwashing.
Cartridge filters can save more than 600 liters of water per cleaning compared to media filters*.

* For a 50 $m^3$ pool using a 14 $m^3$/h filtration system : 700 L of water used for a 3min complete media filter backwashing procedure (as per EN16713-1 standard) vs. 60 L for a 3 min cartridge cleaning using a garden hose (around 20 L/min).

## General diagram of installation of swimming pool equipment

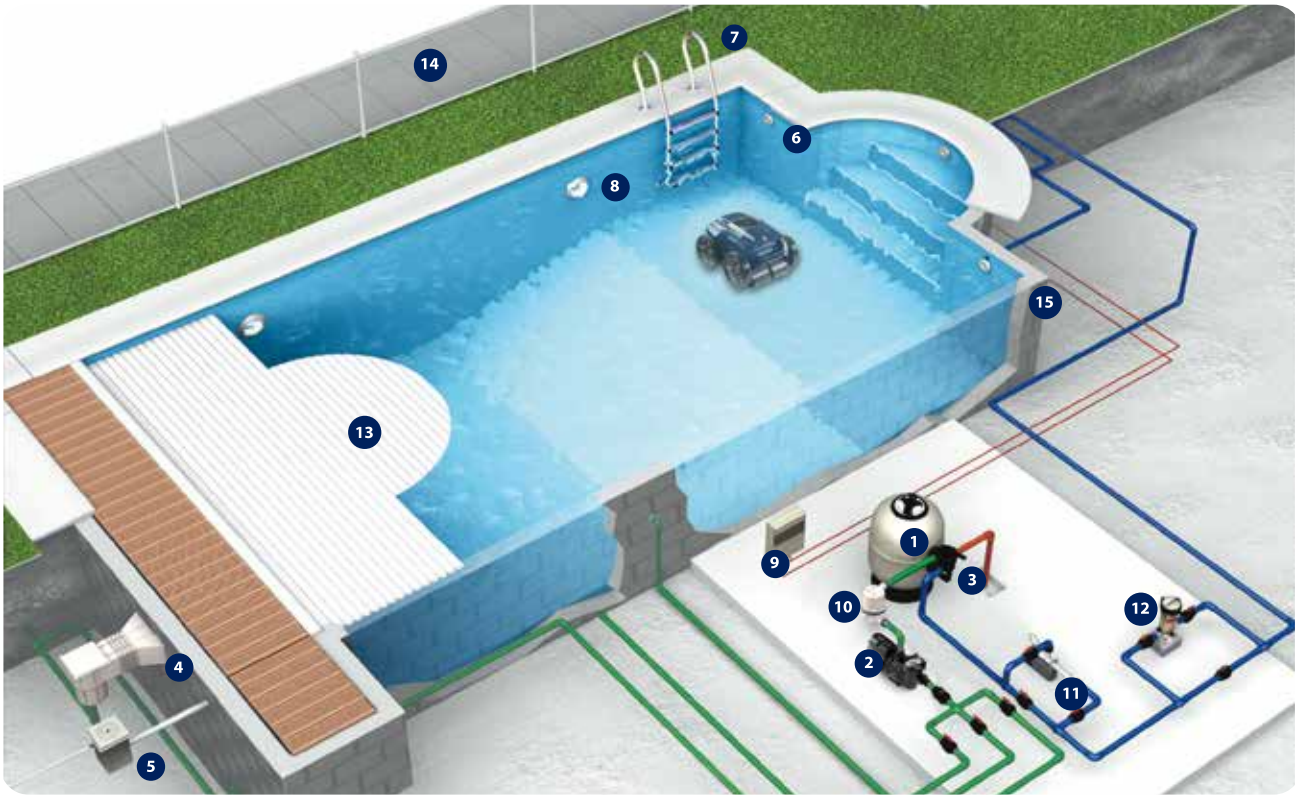


1. Filter
2. Pump
3. Multiport valve
4. Skimmer
5. Level regulator
6. Return inlet
7. Ladder
8. Light spot
9. Electric control cabinet
10. Hydrospin
11. Heat exchanger
12. Chlorine dispenser
13. Automatic pool cover
14. Safety barriers
15. Pool shell

## Filter and pump selection table

| Pool volume | Daily filtration | Filtration speed | Filter Ø | Plumbing | | Pump | Sand |
|---|---|---|---|---|---|---|---|
| $m^3$ | h | $m^3/h/m^2$ | mm | mm | inches | HP | kg |
| 30-40 | 8 | 50 | 500 | 50 | 1 ½" | 0.5 | 40 |
| 40-50 | 8 | 50 | 550 | 50 | 1 ½" | 0.75 | 60 |
| 50-60 | 8 | 50 | 600 | 50 | 1 ½" | 0.75 | 70 |
| 60-75 | 8 | 50 | 650 | 50 | 1 ½" | 1.0 | 100 |
| 75-90 | 8 | 50 | 750 | 50 | 1 ½" | 1.0 | 130 |
| 90-115 | 8 | 50 | 800 | 50 | 1 ½" | 1.5 | 160 |
| 115-130 | 8 | 50 | 850 | 63 | 2" | 1.5 | 175 |
| 130-170 | 8 | 50 | 900 | 63 | 2" | 2 | 300 |
| 170-200 | 8 | 50 | 900 | 63 | 2" | 3 | 330 |

## Size of pipe and water flow rate

| D mm | DN (Internal diam.) mm | Inches | Flow rate ($m^3/h$) depending on the speed of the water Suction (1.2 m/s) | Discharge (2 m/s) |
|---|---|---|---|---|
| 20 | 15 | ½" | 1 | 1.6 |
| 25 | 20 | ¾" | 1.6 | 2.7 |
| 32 | 25 | 1" | 2.7 | 4.4 |
| 40 | 32 | 1 ¼" | 4.4 | 7.3 |
| 50 | 40 | 1 ½" | 7.5 | 12.5 |
| 63 | 50 | 2" | 11 | 18.4 |
| 75 | 65 | 2 ½" | 15.7 | 26.1 |
| 90 | 80 | 3" | 22.3 | 37.1 |

Due to ongoing changes, some photographs may not match the products exactly.

Printed on paper from sustainable forests. Fluidra contributes to environmental protection.

PEFC LONG-LIFE ISO 9706 PH NEUTRAL HEAVY METAL ABSENCE CE 94/62 ELEMENTAL CHLORINE FREE GUARANTEED

POOL AUTOMATION 11

PVC VALVES AND FITTINGS 37

POOL SURROUND EQUIPMENT 49

POOL SHELL EQUIPMENT 91

POOL LIGHTING 159

FILTRATION 197

PUMPS 243

WATER TREATMENT AND WATER ANALYSIS PRODUCTS 287

AUTOMATIC WATER TREATMENT 355

CLEANING 399

HEATING AND COOLING 463

DEHUMIDIFICATION 525

POOL LINING MATERIAL 561

SPAS AND SAUNAS 605

# POOL AUTOMATION

## Internet of Pools & Solutions for users


14 FLUIDRA POOL

16 SMART MAINTENANCE: BLUERIIOT


FLUIDRA POOL


22 AUTOMATION GATEWAYS
- 22 iQBridge RS
- 23 iQBridge ZB

23 SMART PLUGS


ASTRALPOOL


24 CONNECTED CABINETS
- 26 Command Connect Compact
- 26 Command Connect Advance
- 27 Connect & Go connected power centers

34 AUTOMATION ACCESSORIES

# Internet of Pools

**«Internet of Pools» is not only about smart products and services, it's about enjoying a perfect pool experience, responsibly.**

## 1. Peace of mind

- The «Internet of Pools» consists of connected products delivering more intelligence and autonomy to the pool so that users can free themselves from constraints.
- In addition, users can take control of their pool anytime and anywhere using the app linked to their product(s).

## 2. Efficiency & Sustainability

- Thanks to built-in connectivity & remote control using an app, the pool becomes smarter.
- Connected products can act together to make it more efficient.
- Users are free to let their pool adapt itself to the environment or to adjust settings remotely if they want to.

# Solutions

**3 levels of service to suit everyone's need**

## SMART MAINTENANCE — Connected pool assistants

**Supervises water quality & provides maintenance advices anytime, anywhere, for any type of pool**

blueriiot

**Blueriiot connected pool assistants**:
> Blue Check (smart test strips)
> Blue Connect Go (smart pool assistant)
> Blue Connect Plus (smart pool assistant)

User app & Connectivity type

Blueriiot

sigfox

## SMART PRODUCTS

**Remote control of stand alone connected products**

ZODIAC®

**Heat pumps**: Z250iQ, Z260iQ, Z350iQ, Z550iQ, PM40*, PX50*, HPO*, PX25, PX26.
**Salt water chlorinator**: eXPERT*.
**Variable speed pump**: E30iQ.

ASTRALPOOL

**Heat pumps**: ProElyo Touch*, Evoline*, Eco Elyo.
**Salt water chlorinator**: Smart Next*, Energy Connect, Clear Connect.
**Variable speed pump**: Verdon VS.
**Light control**: Lumiplus Connect.

User app & Connectivity type

Fluidra Pool

Wi Fi

** Using iQBridge RS Wi-Fi gateway*

# Enhanced pool experience

## 3. Added services

- Product connectivity allows to deliver in-app services such as advices for an easier pool maintenance or forecasts to better adjust pool settings.
- Product control features could also be extended when using the app for an enhanced user experience.
- Pool control can also be transferred to Pool Pros to allow maintenance contracting and optimize work load.

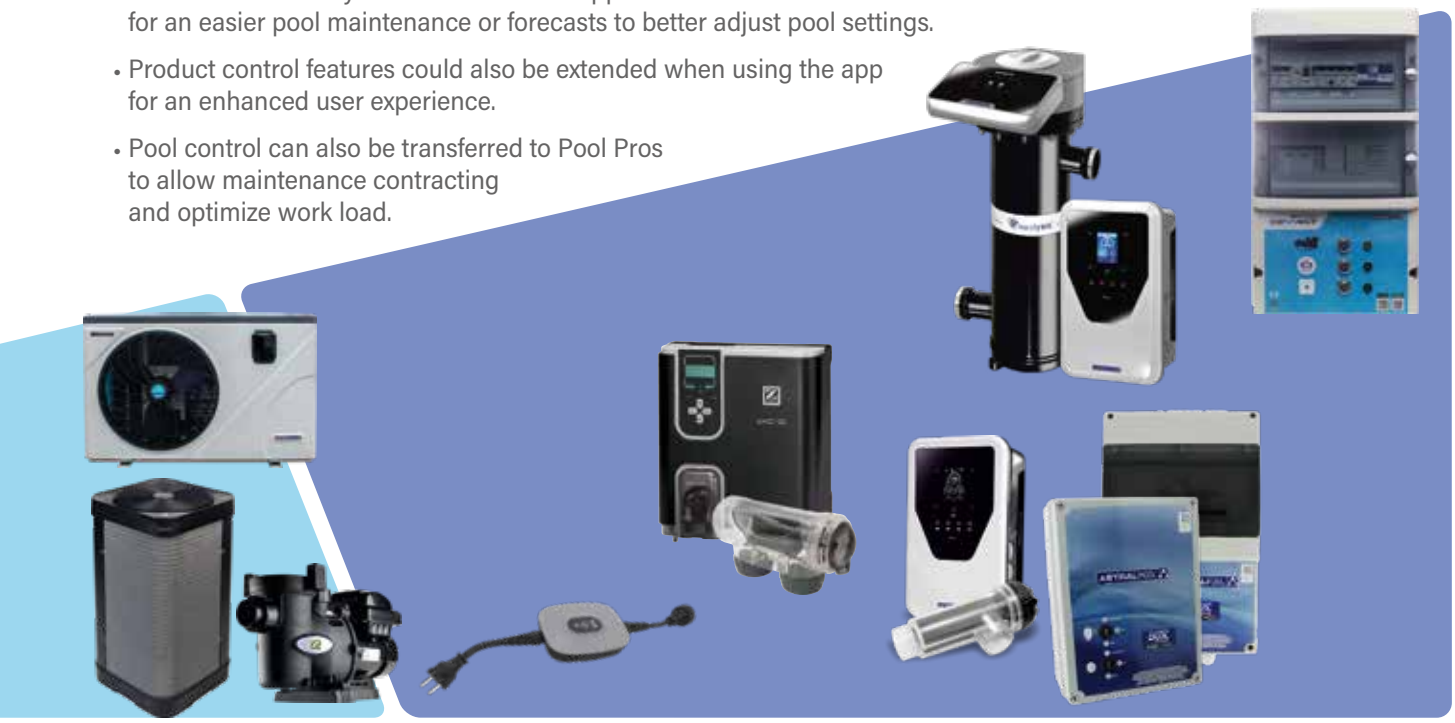

| Connected products | SMART POOL Connected hubs | | | |
|---|---|---|---|---|
| | **Total control of pool equipment** | | | |
| | FLUIDRA pool | ZODIAC® | ASTRALPOOL | |
| **All "iQ" robotic cleaners**. **Heat pump**: Z400iQ. **Variable speed pump**: FloPro VS** | **Pool control**: Smart Plug. | **Smart chlorinators with pool control**: eXO iQ, Hydroxinator iQ. | **Smart systems with pool control**: New Elite Connect, New Neolysis Connect, New Control Connect, Control Connect all-in-One. **Power centers**: Command Connect Compact Command Connect Advance. | **Power centers**: Connect & Go. |
| User app & Connectivity type | User apps & Connectivity type | | | |
| iAquaLink® Wi Fi | Fluidra Pool Bluetooth Wi Fi | iAquaLink® Wi Fi | Poolstation Bluetooth Wi Fi | Fluidra Connect |

** Using iQPUMP Wi-Fi gateway

# One app, a smart pool ecosystem, the best pool experience

## Your smart pool, anytime & anywhere

- Easily check, manage and maintain your pool with Fluidra Pool.
- Get personalized recommendations or simply enjoy knowing that your pool is ready, exactly as you like it.

## Peace of mind

- Easy setup: guided step by step app onboarding process.
- Your pool always ready to bath. Be alerted in case any action is needed.
- In-app recommendations delivering more self-autonomy.
- Secure and safe app following the highest data privacy standards (GDPR) and security practices.

## Evolving ecosystem

- Best in class app experience with dedicated screens for bathing, recommendations and settings.
- Benefit from new features and enhancements thanks to regular app updates.
- Over the air updates of the pool equipment to enjoy the latest improvements.

### "My pool" dashboard

- Check at-a-glance the pool status to see if it is ready to bath.
- Weather forecast
- Main water parameters with color-coded icons
- Information messages if any action is needed.

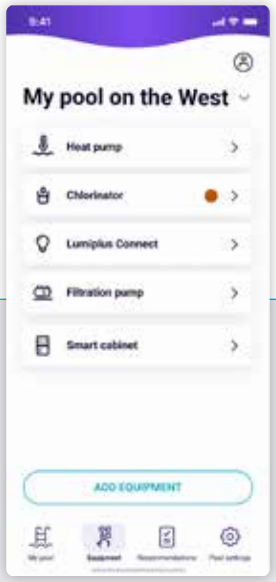


### "Equipment" dashboard

- Access to all connected equipment in the pool and see if any action is required thanks to the colored dot.
- Easily add a new pool equipment and get guided by the smart app pairing process.

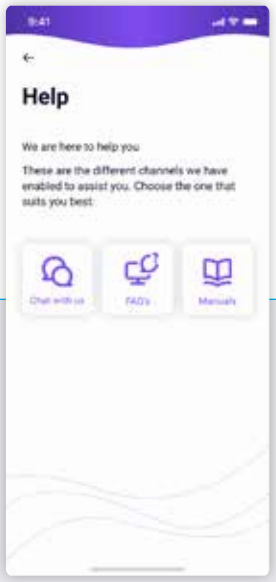


### "Recommendations" menu

- Get recommendations for maximum autonomy.
- Assistance section to address an event, get direct access to product manuals or request for online assistance.

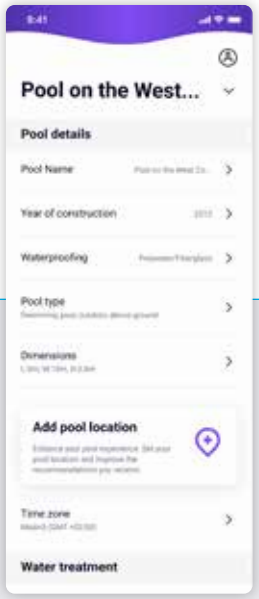


### "Pool settings" menu

- All the information about the pool (name, type, location...)
- Easily share pool control with family and friends (via QR code, sms, email).

**DID YOU KNOW?**

**> A new app for a smart pool**
Most of our new connected products are directly using the new Fluidra Pool app.

**> A new ecosystem that will expand over time**
New connected solutions to come will use the Fluidra Pool app to create a complete pool ecosystem with maximum flexibility and best pool experience.

# Table of Fluidra Pool app compatible products:

| | BRAND | | |
|---|---|---|---|
| | ASTRALPOOL | FLUIDRA POOL | ZODIAC |
| **CATEGORY** | | | |
| **Pool Control** | Command Connect | Smart Plug | |
| **Light Control** | LumiPlus Connect | | |
| **VS Pumps** | Verdon VS | | E30iQ |
| **Heating** | Eco Elyo<br>Pro Elyo Touch*<br>Evoline* | | Z250iQ/PX25<br>Z260iQ/PX26<br>Z350iQ<br>Z550iQ<br>PM40*<br>PX50*<br>HPO* |
| **Water treatment** | Energy Connect<br>Clear Connect<br>Smart Next*<br>New Elite Connect<br>Neolysis Connect<br>New Control Connect<br>Control Connect all-in-one | | eXPERT* |

** Using iQBridge RS Wi-Fi gateway*

FLUIDRA POOL

Available on the iPhone App Store

ANDROID APP ON Google play

blueriiot

## Blueriiot Pool & Spa Assistant digitalises swimming pools and spas

Blueriiot Pool & Spa Assistant is an application that helps the user to maintain and enjoy his swimming pool or his spa, thanks to the integration of connected products and smart home services.
Blueriiot Pool & Spa Assistant gives the user the chance to enjoy his pool with peace of mind.

In one single App, the user benefits from several features :

- Access to pool data, water quality, and weather at the pool in real time.
- Easy configuration and maintenance of Blueriiot connected products.
- Tailor-made recommandations to obtain a crystal clear water. The right dosis of the right product, at the right time.
- Smart pool integration for infinite possibilities.

# Blueriiot Pool & Spa Assistant compatibility & features

**SMART MAINTENANCE**
Connected pool assistants

BLUE CONNECT

BLUE CHECK

NOTIFICATION WHEN AN ACTION IS REQUIRED

ALL TYPES OF POOLS

Cl/Br/Salt

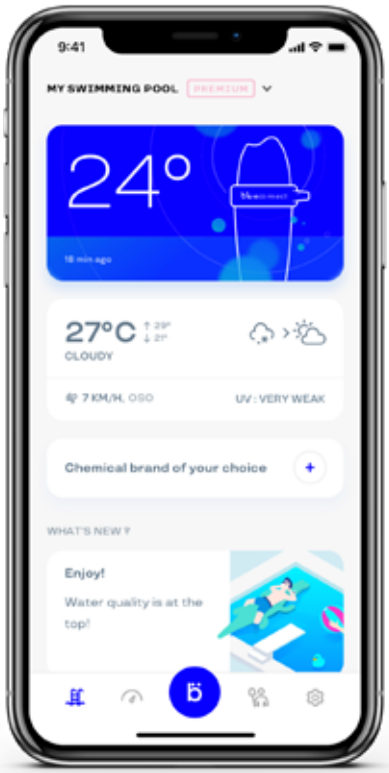


WATER QUALITY

WEATHER DATA & FORECASTS

CHEMICAL ADVICES

ASTRALPOOL

VOICE ASSISTANT INTEGRATION

amazon alexa Google Assistant

## Chemicals compatibility

The users can choose to use Blueriiot Pool & Spa Assistant with a specific product line.
He will benefit from precise and adapted advices to this range of products.

## Voice assistant compatibility

Blueriiot Pool & Spa Assistant is compatible with the Amazon Alexa and Google Assistant voice assistants.

blueriiot

# Blue Connect, the smart pool analyser

**SMART MAINTENANCE**

Connected pool assistants

Blue Connect is a smart device that analyses the quality of the water automatically. Combines with the free app Blueriiot Pool & Spa Assistant, it informs the user how to balance out the pool in easy, straight forward steps!

The device is equipped with an innovative sensor that measures the main parameters to keep a crystal clear water: pH, water temperature, ORP (disinfectant level) and conductivity.

**ALWAYS CONNECTED**

***BLUE CONNECT* IS ALWAYS CONNECTED THANKS TO DIFFERENT TECHNOLOGIES:**

**SIGFOX**

BLUE CONNECT PROVIDES UP TO 20 AUTOMATIC REMOTE MEASUREMENTS PER DAY THANKS TO SIGFOX'S NETWORK DEDICATED TO CONNECTED DEVICES

**BLUETOOTH**

*BLUE CONNECT* USER CAN TAKE AN INSTANT MEASURE DIRECTLY WITH BLUETOOTH.

**WI-FI**

*BLUE CONNECT* WORKS WITH THE WI-FI NETWORK THANKS TO EXTENDER

## PLUG & PLAY

***BLUE CONNECT* WORKS WITH ALL TYPES OF POOLS AND ITS INSTALLATION TAKES LESS THAN 2 MIN**

DOWNLOAD THE APP BLUERIIOT

ACTIVATE BLUE CONNECT

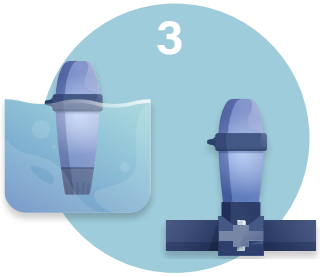


INSTALL IN THE WATER OR IN THE TECHNICAL ROOM (*FIT 50*)

ENJOY

# Blue Check, the "smart" test strip

**SMART MAINTENANCE**

Connected pool assistants

Blue Check is a set of 50 test strips to use with the free application Blueriiot Pool & Spa Assistant that analyses the quality of the water by taking measurements manually. The app gives customised advices to maintain the pool. A simple solution to keep the water clean with peace of mind.

**Blue Check measures:**

- pH (6.2 - 8.4)
- Free chlorine (0 - 10)
- Bromine (0 - 20)
- Total alkalinity (0 - 240)
- Total hardness (0 - 1000)
- Cyanuric acid (0 - 300)

Blue Check is a complementary solution of Blue Connect, the smart pool analyser (see page 18). Thanks to Blue Check, you can ensure that the pool water is in balance by verifying other parameters such as the alkalinity, the hardness and the cyanuric acid. More info p. 350.

**EASY TO USE**

**1**

**MAKE THE TEST AND ENTER THE STRIP'S VALUES IN THE APP**
*BLUERIIOT POOL & SPA ASSISTANT*

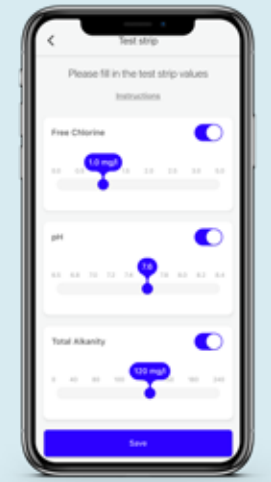

**2**

**ACCESS THE POOL STATUS**

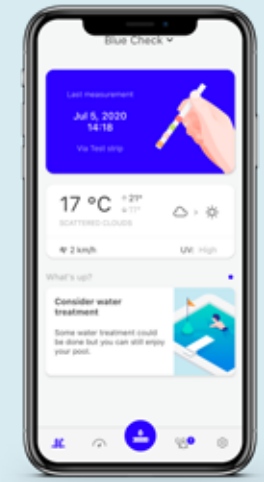

**3**

**RECEIVE CUSTOM RECIPE ON WHICH CHEMICALS TO USE IN WHICH QUANTITY**

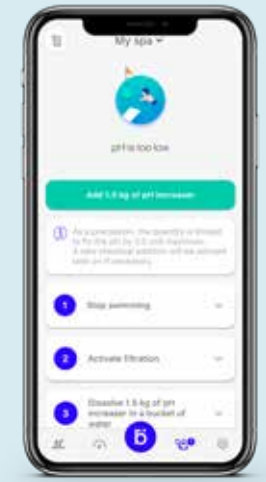

blueriiot

# Viirtual Pool Care platform

**SMART MAINTENANCE**

Connected pool assistants

## Web platform dedicated to pool & spa professionals

**www.virtualpoolcare.io** is a web platform designed specifically for the pool and spa industry. It offers you the tools you need to organize your business, promote your products, services & shops towards Blueriiot users. Viirtual Pool Care is available for computers, tablets or phones.

## POOLS

### MONITOR YOUR POOL & SPA PARK REMOTELY ON THE PLATFORM *VIIRTUAL POOL CARE*

- ALL YOUR CONNECTED POOLS AT FIRST GLANCE.
- FOLLOW LIVE THE ANALYSES OF YOUR CLIENTS' BLUE CONNECT.
- PERFORM ACCURATE AND PROFESSIONAL DIAGNOSIS.
- AVOID UNNECESSARY TRAVELS.
- ANTICIPATE AND ADVISE YOUR CLIENTS ON POSSIBLE PREVENTIVE ACTIONS.

## EASY TO USE

1. CREATE A TOTALLY FREE ACCOUNT ON WWW.VIRTUALPOOLCARE.IO
2. SEND A SHARING REQUEST TO YOUR CUSTOMER USING THE KEY OF THE BLUE CONNECT TO ASK HIS PERMISSION TO SHARE THE BLUE CONNECT'S DATA
3. AS SOON AS HE ACCEPTS, YOU HAVE ACCESS TO HIS POOL'S DATA. YOU CAN MONITOR AS MANY AS POOLS OR SPAS AS YOU WANT.

## CHEMICAL PACK

### BLUERIIOT POOL & SPA ASSISTANT PROMOTES FLUIDRA AND PARTNERS CHEMICAL BRANDS

- INCREASE CUSTOMERS LOYALTY TO THE PRODUCTS YOU SALE.
- INCREASE CUSTOMERS CONFIDENCE WITH TAILOR MADE CHEMICAL RECOMMENDATIONS.
- SUPPORT CUSTOMERS RETENTION.

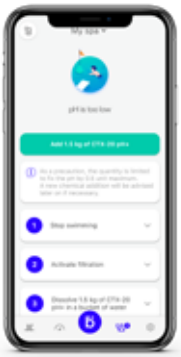

## VENDOR LOCATOR

### LIST YOUR SHOP(S)* IN THE APP *BLUERIIOT POOL & SPA ASSISTANT*

- PROMOTE YOUR SHOP VERY EASILY TO A VERY TARGETED AUDIENCE.
- GENERATE NEW LEADS GEOGRAPHICALLY.
- YOUR SHOP LISTED AS THE FAVORITE SHOP AND FIRST IN THE LIST.

* ASK YOU FLUIDRA'S SALES REPRESENTATIVE FOR MORE INFORMATION

# Blueriiot water testers

SMART MAINTENANCE
Connected pool assistants

## Blue Connect Range - Selection guide

Blue Connect is available in different packs with different functionalities to meet different needs.

| | Blue Check | Blue Connect GO | Blue Connect Plus |
|---|---|---|---|
| | | | |
| **PRODUCT CHARACTERISTICS** | | | |
| Water tester method | Test strips | Smart water analyzer (white color) | Smart water analyzer (blue color) |
| Analysis method | 5-in-1 strips: free chlorine or bromine, pH, total alkalinity, cya-nuric acid and total hardness | 3-in-1 sensor: water temperature, pH, ORP/Redox | 4-in-1 sensor: water temperature, pH, ORP/Redox, conductivity |
| Type of pool | Pools and spas | Pools and spas | Pools and spas |
| Disinfection method | Chlorine, Bromine, Salt | Chlorine, Bromine | Chlorine, Bromine, Salt |
| **ACCESSORIES AND SERVICE** | | | |
| Fit 50 | - | Compatible | Included in the pack |
| Extender | - | Compatible | Compatible |
| Viirtual Pool Care (Pools acces) | - | - | Included in the pack |
| **CONNECTIVITY** | | | |
| Bluetooth measurement via the app | - | ✓ | ✓ |
| Remote analysis with Wi-Fi network | - | Upon request (thanks to the Extender accessory) | Automatically (thanks to the Extender accessory) |
| Up to 20 measurements taken automatically and remotely with Sigfox | - | Subscription required | Included for life |
| **BLUERIIOT POOL & SPA ASSISTANT APP** | | | |
| Practical guide with chemical advice | ✓ | ✓ | ✓ |
| Chemical pack of your choice | ✓ | ✓ | ✓ |
| Value table | ✓ | ✓ | ✓ |
| Blueriiot Premium | - | Subscription required | Included for life |

FLUIDRA POOL

3 YEAR WARRANTY

EASY INSTALLATION

MADE IN EUROPE

FLUIDRA POOL

AUTOMATION GATEWAYS

# iQBridge RS

+ Anytime & anywhere app control
+ Your smart pool in the palm of your hand
+ Plug, Scan & Play connectivity

## DESCRIPTION

- Anytime & anywhere app management for compatible Fluidra heat pumps & salt water chlorinators.
- Wi-Fi gateway enabling remote control using the Fluidra Pool app.
- Plug & play thanks to its watertight connector that simply plugs into the corresponding one already present on the product.
- Can be either sticked on the device or fixed on the wall.
- Intuitive app pairing and setup. Manage your heating or water treatment remotely in less than 1 minute.
- Look for the "FluidraPool compatible" pictogram in catalog pages to identify products that can become connected using iQBridge RS Wi-Fi gateway.

## ACCESSORIES INCLUDED IN THE PACK

* Wall fixing kit
* Outdoor double-sided tape to stick it onto heat pump casing

## iQBridge RS TO BE USED WITH

| | ASTRALPOOL | ZODIAC® |
|---|---|---|
| Heat pumps | ProElyo Touch, Evoline | PX50, PM40, HPO |
| Salt water chlorinators | Smart Next, Smart Next pH, Smart Next pH/Rx | eXPERT, eXPERT pH, eXPERT pH/ORP |

## TECHNICAL FEATURES

| Model | iQBridge RS |
|---|---|
| Code | 75042 |
| Power supply | From the connected product (dedicated watertight plug) |
| Cable length | 1 m |
| App pairing | Bluetooth |
| Wi-Fi connectivity | Wi-Fi 2.4 GHz (1) |
| Wi-Fi range | Can be installed up to 90 m from homeowner router (2) |
| App control | Free Fluidra Pool app for Android™ and Apple® smartphones |
| Protection rating | IPX5 |

(1): A Wi-Fi band selection in router's settings menu may be needed depending on situation.

(2): Max range without obstacles (partitions, walls, ironwork...). Use of a Wi-Fi range extender or a powerline Wi-Fi hotspot may be required in some cases.

## WEIGHT & DIMENSIONS

| | |
|---|---|
| Weight | 0.2 kg |
| Size | width x height x depth = 10 x 10 x 3 cm |

If a product or packaging displays "iAquaLink+ compatible" or "Fluidra Pool compatible", please download the Fluidra Pool app from your app store.

AUTOMATION GATEWAYS

# iQBridge ZB

## DESCRIPTION

- Wireless gateway solution, transforming Bluetooth connected products into cloud-connected products for seamless app control

## iQBridge ZB TO BE USED WITH

| | FLUIDRA POOL | ASTRALPOOL |
|---|---|---|
| Pool control | Smart Plug | Command Connect Advance |
| | | Command Connect Compact |

## TECHNICAL FEATURES

| Model | iQBridge ZB |
|---|---|
| Code | WA000082 |
| Power supply | AC Adaptor |
| App pairing | Bluetooth |
| Wi-Fi connectivity | Wi-Fi 2.4 GHz (1) |
| Wi-Fi range | Can be installed up to 90 m from homeowner router (2) |
| App control | Free Fluidra Pool app for Android™ and Apple® smartphones |

(1): A Wi-Fi band selection in router's settings menu may be needed depending on situation.

(2): Max range without obstacles (partitions, walls, ironwork...). Use of a Wi-Fi range extender or a powerline Wi-Fi hotspot may be required in some cases.

## WEIGHT & DIMENSIONS

| | |
|---|---|
| Weight | 76 g |
| Size | 80 mm x 83 mm x 20 mm |

SMART PLUGS

# Smart Plug

## DESCRIPTION

- Fluidra Pool watertight Smart Plug offers Plug & Play control over Bluetooth and is specifically designed for filter pumps, lighting, or salt-water chlorinator control.

## TECHNICAL FEATURES

| Model | Smart Plug F-F (EU) | Smart Plug F-E (FR) |
|---|---|---|
| Code | 76671 | 76673 |
| Male plug | Type F | |
| Female plug | Type F (with watertight cap) | Type E (with watertight cap) |
| Main power input | 220-240 Vac / 50/60 Hz | |
| Max output | 230 Vac - 16 A | |
| Bluetooth | BLE V5.2, 2.4 GHz, max power 100 mW | |
| Zigbee | 2.402-2.481 GHz band, +10 dBm max radio power | |
| App control | Free Fluidra Pool app for Android™ and Apple® smartphones | |
| IP Protection rating | IP 44 | |

## WEIGHT & DIMENSIONS

| | |
|---|---|
| Length | 66 cm |

# AstralPool® Command Connect smart cabinets

2 connected ranges using Fluidra Pool app to suit everyone's need

**SMART POOL**
Connected hubs

## Connected filtration cabinet for pump & lighting control

Easy control of the primary pool equipment thanks to the dual channel Smart Relay embedded in each Command Connect smart cabinet.

+ **Filter pump control including weekly scheduling**
+ **Lighting control including weekly scheduling**
+ **Lighting color selection**

(compatible with AstralPool® LumiPlus RGB & Zodiac® NL RGBW Led)

**DID YOU KNOW?**

> Each Command Connect smart cabinet embeds a dual channel Smart Relay.

> Using the Fluidra Pool app over Bluetooth, it allows to control and set weekly schedules for both filter pump & lighting.

# AstralPool® Command Connect smart cabinets

2 connected ranges using Fluidra Pool app to suit everyone's need

**SMART POOL**
Connected hubs

## Command Connect Compact

**Standard pool control in a compact format**

+ Anytime intuitiveness
+ Easy control features
+ Maximum safety

For all standard pools

## Command Connect Advance

**Pool control in an advanced format**

+ Anytime intuitiveness
+ Advanced control features
+ Maximum safety

For all types of pools

## Comparison table: added value of connectivity

| | Standard Filtration Cabinet | Command Connect Compact | Command Connect Advance |
|---|---|---|---|
| | | | |
| USER APP | – | Fluidra Pool | |
| CONNECTIVITY METHOD | – | Bluetooth (standard), Wifi (with optional iQBridge ZB) | |
| OVER THE AIR UPDATES | – | ✔ | ✔ |
| HIGHEST DATA PRIVACY STANDARDS (GDPR COMPLIANT) | – | ✔ | ✔ |
| IN-APP USER ASSISTANCE | – | ✔ | ✔ |
| FILTER PUMP CONTROL | Manual switch (ON/OFF/AUTO) | Manual switch (ON/OFF/AUTO) & App control | |
| FILTER PUMP SCHEDULING | Analog clock daily timer | Extended in-app weekly scheduling | |
| LIGHTING CONTROL | Manual switch ON/OFF | Manual switch (ON/OFF/AUTO) & App control | |
| LIGHTING SCHEDULING | – | Extended in-app weekly scheduling | |
| LIGHTING COLOR CONTROL | – | Color & sequences selection (AstralPool LumiPlus RGB & Zodiac NL) | |
| SMARTPHONE NOTIFICATIONS | – | ✔ | ✔ |
| IN-APP USER ADVICE | – | ✔ | ✔ |
| DEVICE INFO FOR EASY DIAGNOSIS | – | ✔ | ✔ |
| WARRANTY | 2 years | 3 years | 3 years |

CONNECTED FILTRATION CABINETS

# Command Connect Compact

## DESCRIPTION

- Connected control box for 1 filtration pump and underwater lighting. Compact model.
- Thermal overload protection for the pump. Exists in type C (4A - 6.3A) and type D (6A- 10A).
- 100 VA or 200 VA transformer for lighting (depending on model).
- App control / Off / On three-position switches for backup manual control.
- Dual channel Smart Relay allowing pump & lighting management using the Fluidra Pool+ app over Bluetooth.
- Extended in-app weekly scheduling for both pump & lighting.
- Led color & sequence selection & programming (compatible with AstralPool LumiPlus RGB and Zodiac NL Led).

| | Code | Standard Pack | Standard weight in kg | Standard volume in m³ |
|---|---|---|---|---|
| **Command Connect Compact** | | | | |
| 100VA 4/6.3 (C) | 75799 | 1 | - | - |
| 100VA 6/10 (D) | 75800 | 1 | - | - |
| 200VA 4/6.3 (C) | 75801 | 1 | - | - |
| 200VA 6/10 (D) | 75802 | 1 | - | - |

* Check light control compatible products in the product user manual.

# Command Connect Advance

## DESCRIPTION

- Connected control box for 1 filtration pump and underwater lighting. Larger model with a window for easy access.
- Thermal overload protection for the pump. Exists in type C (4A - 6.3A) and type D (6A- 10A).
- 100 VA or 200 VA transformer for lighting (depending on model).
- App control / Off / On three-position switches for backup manual control.
- Dual channel Smart Relay allowing pump & lighting management using the Fluidra Pool app over Bluetooth.
- Extended in-app weekly scheduling for both pump & lighting.
- Led color & sequence selection & programming (compatible with AstralPool LumiPlus RGB and Zodiac NL Led).

| | Code | Standard Pack | Standard weight in kg | Standard volume in m³ |
|---|---|---|---|---|
| **Command Connect Advance** | | | | |
| 100VA 4/6.3 (C) | 75803 | 1 | - | - |
| 100VA 6/10 (D) | 75804 | 1 | - | - |
| 200VA 4/6.3 (C) | 75805 | 1 | - | - |
| 200VA 6/10 (D) | 75806 | 1 | - | - |

* Check light control compatible products in the product user manual.

**DID YOU KNOW?**

> Use iQBridge ZB optional gateway to add remote control over Wi-Fi.

# FLUIDRA CONNECT

CONNECT & GO

**SMART POOL**
Connected hubs

## The most comprehensive connected pool solution

1. **Pre-wired power center cabinets for easy installation**
2. **1 professional app for easy configuration** — NN PRO
3. **1 user app to remotely control the pool** — NN
4. **Advanced management with compatible products (NN Things)**

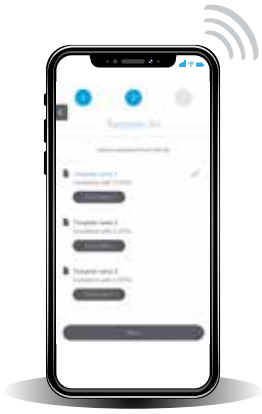

Available on the iPhone App Store
ANDROID APP ON Google play

## Fluidra Connect: Pool Professional benefits

NN PRO professional APP

www.fluidraconnect.com
web portal

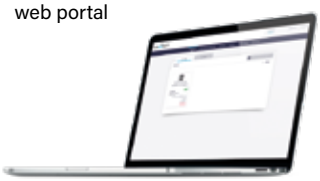

**Differenciation with Connected Pools.**
- Better offer and service for the End User.

**Fast & Easy installation.**
- Drastically reduces the installation time thanks to pre-wired power center cabinets
- Easy on-site configuration using NN PRO app.

**Savings.**
- Cut back cost on better time and resource management.
- Can save unnecessary trips, petrol costs, toll fees, etc.

**Remote maintenance.**
- Piece of mind for Maintenance Professionals.
- Preventing and solving problems remotely using Fluidra Connect professional dashboards to see all pools at a glance.

## Fluidra Connect: Consumer benefits

NN consumer APP

**Peace of mind.**
- Dedicated user app for a pool always ready to use in the top conditions.
- Healthy water for you and your family.

**Savings.**
- A connected pool helps to save water, energy and use less chemical products.

**Easy control.**
- Access and control your pool 24/7 from anywhere, at any time, using the NN app.

ASTRALPOOL

FLUIDRA CONNECT®

CONNECT & GO

# Maximum convenience & easy installation

Once Connect & Go power center cabinet is installed and pool equipment wired to it, simply follow 4 easy steps:

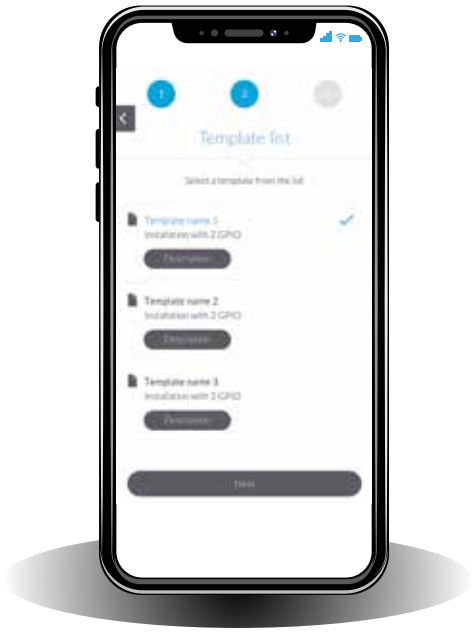


1. Download the NN PRO app and create your professional user account.
2. Scan Connect Box QR code to register the Connect & Go power center cabinet.
3. Scan power center cabinet barcode to get the predefined pool configuration template.
4. Launch NN compatible products auto detection using the app to get the pool dashboard.

- Configuration is complete within a very short time
- Pool owner will also be able to access his pool using the NN consumer app

**Did you know?**
Access your connected pool park using either the NN Pro App or the dedicated website using your pool pro account: https://portal.fluidraconnect.com.

FLUIDRA
# CONNECT
CONNECT & GO

**SMART POOL**
Connected hubs

## Installation Diagram

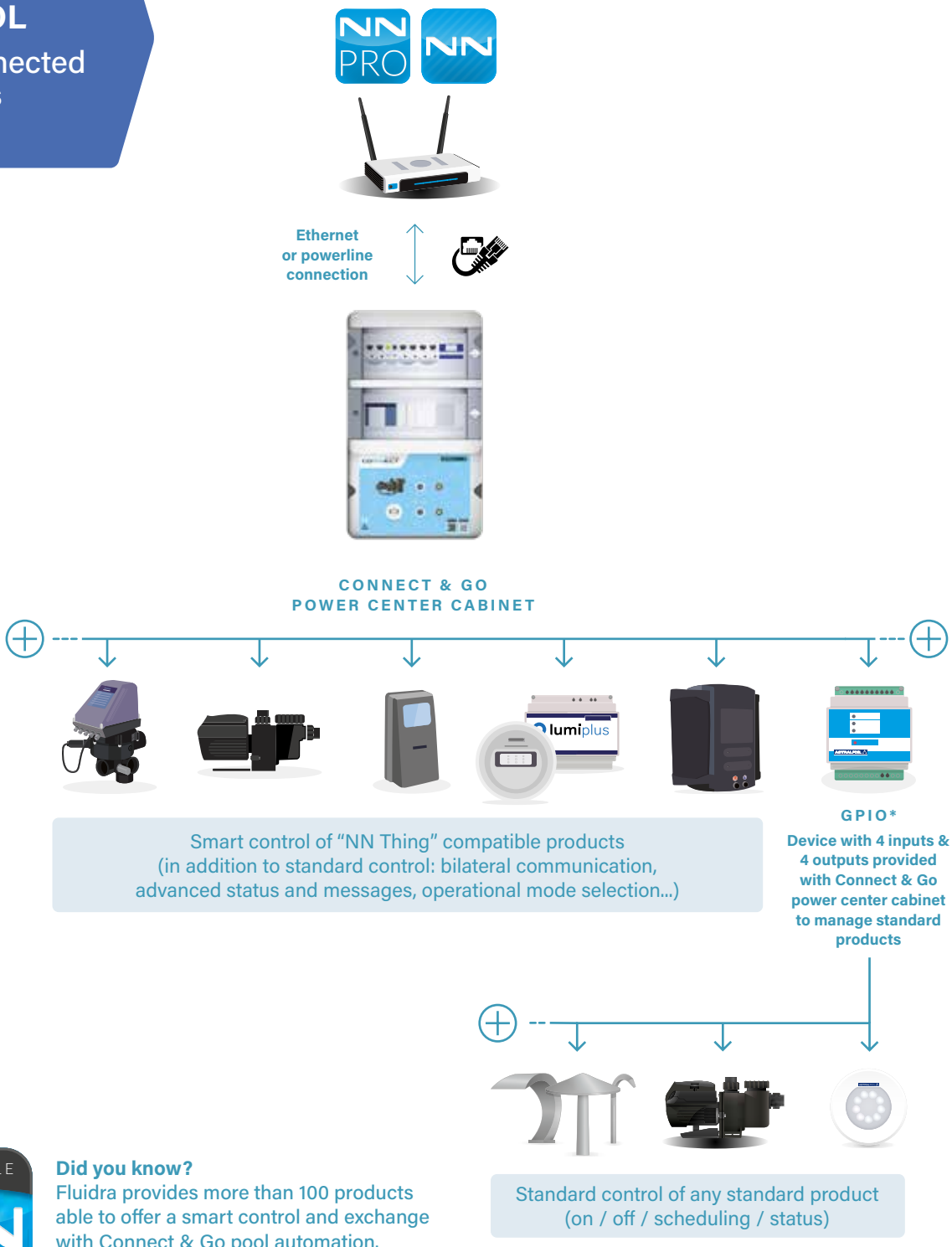


COMPATIBLE NN thing®

**Did you know?**
Fluidra provides more than 100 products able to offer a smart control and exchange with Connect & Go pool automation. Simply look for the "NN Thing" icon in the product pages.

* 1 GPIO is installed inside Connect & Go power center cabinets. Additional GPIO can be purchased separately to control more equipment. See code 62368 on page 34.

ASTRALPOOL

FLUIDRA CONNECT®

CONNECT & GO

## SMART POOL

Connected hubs

# Range map

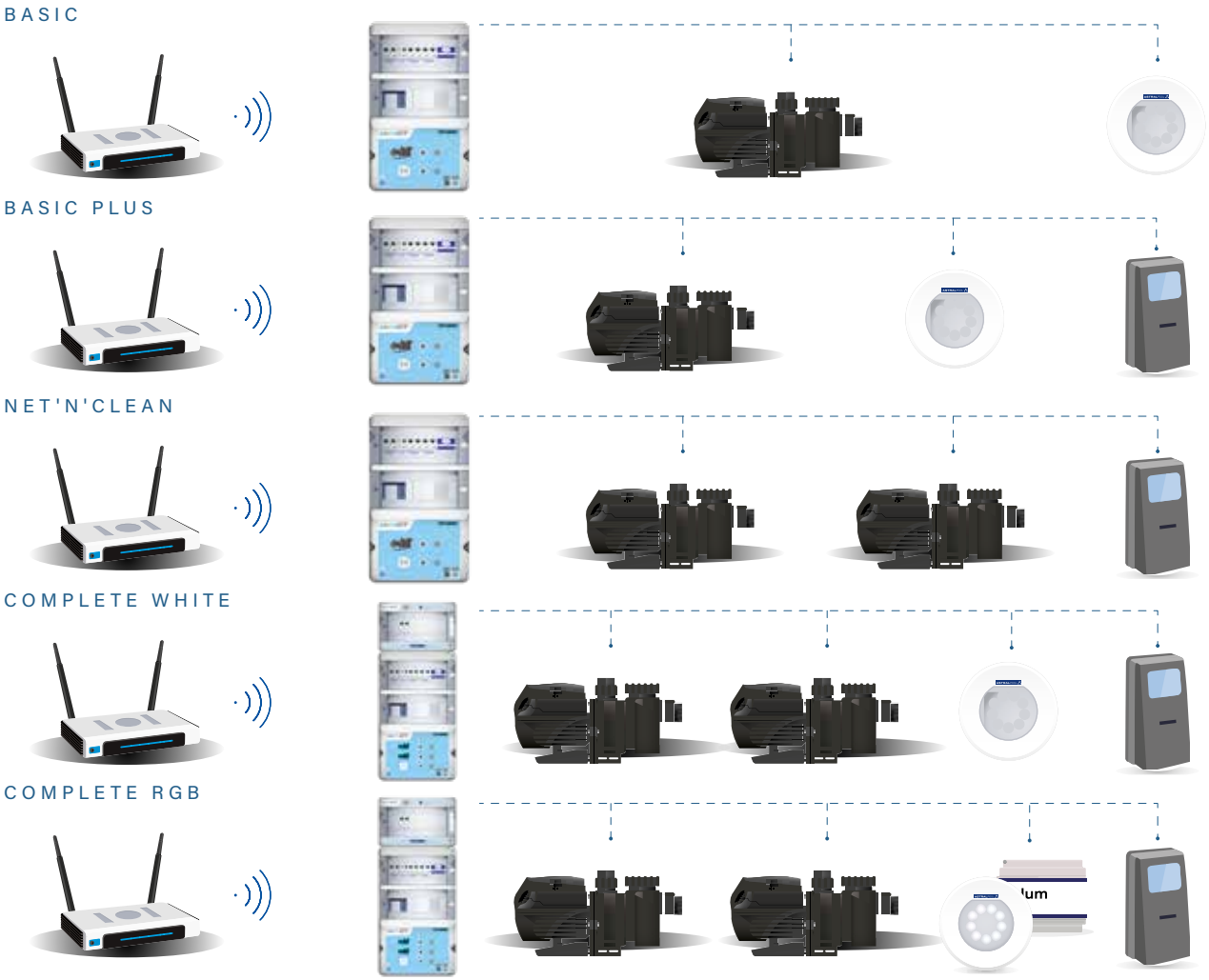


| | | PRE-DEFINED TEMPLATES | | | | | |
|---|---|---|---|---|---|---|---|
| CONNECT & GO VERSION | Fluidra code | 1 pump (+ on/off button) | 2 pumps (+ on/off buttons) | White light (+ on/off button) | LumiPlus RGB color light | Light Transformer included | Extra device (+ on/off button for standard chlorinator, booster pump, etc…) |
| BASIC | 70874(C) / 70875(D) | ✓ | | ✓ | | | |
| BASIC PLUS | 70554(C) / 70555(D) | ✓ | | ✓ | | | ✓ |
| NET'N'CLEAN | 70556(C) / 70557(D) | | ✓ | | | | ✓ |
| COMPLETE WHITE | 70697(C) / 70698(D) | | ✓ | ✓ | | ✓ | ✓ |
| COMPLETE RGB | 70699(C) / 70700(D) | | ✓ | | ✓ | ✓ | ✓ |

FLUIDRA CONNECT INTERNET OF POOLS

THE FUTURE IS HERE

## Convenience & easy installation

+ A range of Connect & Go power center cabinets is offered to suit most residential pools configurations.
+ Connect & Go power center cabinets contain all electrical protections and switches to manage pool equipment. Everything is pre-wired to ease installation process so it is the perfect solution for new pools, while also being adapted to retrofit situation (simply replace the whole filtration cabinet with Connect & Go).
+ Once installed, simply follow 4 easy steps:

1. Download the NN PRO app and create your professional user account.
2. Scan Connect Box QR code to register the Connect & Go power center cabinet.
3. Scan power center cabinet barcode to get the predefined pool configuration template.
4. Launch NN compatible products auto detection using the app to get the pool dashboard.

| Type | Intensity range | Power Range 1-phase 230V |
|---|---|---|
| C | 4A - 6.3A | ¾ HP - 1 HP |
| D | 6A - 10A | 1.5 HP |

COMPATIBLE NN thing ®

## Did you know ?

Fluidra provices more than 100 products able to offer a smart control and exchange with Connect & Go pool automation.

# Basic

## DESCRIPTION

Control and power devices for a single-phase pump and control devices for lighting.

- IP-65 protection rating. Two transparent lids with lock and key.
- Products compatible with 220/240 V single-phase (P+N+T) 50 Hz/60Hz input.
- Internet connection required.
- Manual (selector) or automatic lighting control and pump.
- Includes Connect Box and 1 GPIO wiring.
- Enables optional temperature sensor connection (code 69682) with no need for accessories.
- Possibility of connecting a levels box.
- External transformer needed for lighting.
- Expansion modules can be connected for white, RGB and GPIO lighting.

| | Code | Standard Pack | Standard weight in kg | Standard volume in m³ |
|---|---|---|---|---|
| Basic C | 70874 | 1 | 6.00 | 0.028 |
| Basic D | 70875 | 1 | 6.00 | 0.028 |

PROFESSIONAL ADVICE RECOMMENDED

NN

FLUIDRA CONNECT INTERNET OF POOLS

**Check out the expansion modules and accessories available for Connect & Go cabinets.**

ASTRALPOOL

CONNECTED CABINETS

# Basic Plus

## DESCRIPTION

Control and power devices for a single-phase pump plus a control device for lighting.

- IP-65 protection rating. Two transparent lids with lock and key.
- Products compatible with 220/240 V single-phase (P+N+T) 50 Hz/60Hz input.
- Internet connection required.
- Manual (selector) or automatic control for lighting, pump and auxiliary devices.
- Includes Connect Box and 1 GPIO wiring.
- Enables optional temperature sensor connection (code 69682) with no need for accessories.
- Possibility of connecting a levels box.
- External transformer needed for lighting.
- Expansion modules can be connected for white, RGB and GPIO lighting.

| | Code | Standard Pack | Standard weight in kg | Standard volume in m³ |
|---|---|---|---|---|
| Basic Plus C | 70554 | 1 | 6.00 | 0.028 |
| Basic Plus D | 70555 | 1 | 6.00 | 0.028 |

FLUIDRA CONNECT INTERNET OF POOLS

**Check out the expansion modules and accessories available for Connect & Go cabinets.**

# Net'N'Clean

## DESCRIPTION

Control and power devices for a single-phase pump plus a control another device.

- IP-65 protection rating. Two transparent lids with lock and key.
- Products compatible with 220/240 V single-phase (P+N+T) 50 Hz/60Hz input.
- Internet connection required.
- Manual (selector) or automatic control for pump, an auxiliary pump and an auxiliary device.
- Includes Connect Box and 1 GPIO wiring.
- Enables optional temperature sensor connection (code 69682) with no need for accessories.
- Possibility of connecting a levels box.
- External transformer needed for lighting.
- Expansion modules can be connected for white, RGB and GPIO lighting.

| | Code | Standard Pack | Standard weight in kg | Standard volume in m³ |
|---|---|---|---|---|
| Net'N'Clean C | 70556 | 1 | 6.00 | 0.028 |
| Net'N'Clean D | 70557 | 1 | 6.00 | 0.028 |

FLUIDRA CONNECT INTERNET OF POOLS

**Check out the expansion modules and accessories available for Connect & Go cabinets.**

CONNECTED CABINETS

# Complete White

## DESCRIPTION

Control and power devices for two single-phase pump plus a control and power for white lighting.

- IP-65 protection rating. Three transparent lids with lock and key.
- Products compatible with 220/240 V single-phase (P+N+T) 50 Hz/60Hz input.
- Internet connection required.
- Manual (selector) or automatic control for pump, an auxiliary pump, an auxiliary device and lighting.
- Includes Connect Box and 1 GPIO wiring.
- Enables optional temperature sensor connection (code 69682) with no need for accessories.
- Possibility of connecting a levels box.
- A 100 VA transformer is included for lighting.
- Expansion modules can be connected for RGB and GPIO lighting.

| | Code | Standard Pack | Standard weight in kg | Standard volume in m³ |
|---|---|---|---|---|
| Complete White C | 70697 | 1 | 10.0 | 0.043 |
| Complete White D | 70698 | 1 | 10.0 | 0.043 |

**Check out the expansion modules and accessories available for Connect & Go cabinets.**

# Complete RGB

## DESCRIPTION

Control and power devices for two single-phase pump plus a control and power for RGB lighting.

- IP-65 protection rating. Three transparent lids with lock and key.
- Products compatible with 220/240 V single-phase (P+N+T) 50 Hz/60Hz input.
- Internet connection required.
- Manual (selector) or automatic control for pump, an auxiliary pump and an auxiliary device.
- Includes Connect Box and 1 GPIO wiring.
- Enables optional temperature sensor connection (code 69682) with no need for accessories.
- Possibility of connecting a levels box.
- A 100 VA transformer is included for lighting.
- Expansion modules can be connected for white and GPIO lighting.

| | Code | Standard Pack | Standard weight in kg | Standard volume in m³ |
|---|---|---|---|---|
| Complete RGB C | 70699 | 1 | 10.0 | 0.043 |
| Complete RGB D | 70700 | 1 | 10.0 | 0.043 |

**Check out the expansion modules and accessories available for Connect & Go cabinets.**

ASTRALPOOL



FLUIDRA CONNECT
INTERNET OF POOLS

THE FUTURE IS HERE

+ While providing a convenient and easy to install solution with Connect & Go pre-wired power center cabinets, it is possible to create tailor-made Fluidra Connect automation for custom applications.
+ It can be either Fluidra Connect main components to create a custom installation or expansion modules to add features to a Connect & Go power center cabinet.

## ▪ Custom installation

+ The following components are needed as a baseline (to be integrated in a specific power center cabinet - not provided):

- Connect Box which is the "brain" of Fluidra Connect automation.
- One or several GPIO control device(s) that will manage pool equipment.

## ▪ Expansion modules (see next page)

+ 6 expansion modules are offered to bring additional features to Connect & Go power center cabinets:

- 3 modules to add 2 filter pumps control (available for 1, 2 & 3 HP pumps).
- 2 modules to add lighting management (available in white or RGB color with 100 VA transformer).
- 1 module to get an additional GPIO for pool equipmeent management.

# Connect Box

### DESCRIPTION

Connect Box is the brain behind a Fluidra Connect pool installation. Fluidra Connect does not work without Connect Box, which must have an Ethernet cable connection (from a home router, Powerline adapters, etc.).

| | Code | Standard Pack | Standard weight in kg | Standard volume in m³ |
|---|---|---|---|---|
| Connect Box | 76172 | 1 | 0.42 | 0.0010 |

# GPIO

### DESCRIPTION

Control device with 4 digital inputs and 4 digital outputs.

Using the GPIO, incompatible products, such as a white spotlight or filtration pump, can be switched on or off and their timers set.

It also displays the status of some devices, such as a pool cover.

| | Code | Standard Pack | Standard weight in kg | Standard volume in m³ |
|---|---|---|---|---|
| GPIO | 62368 | 1 | 0.18 | 0.0003 |

**When the products to be controlled are not "NN Things", they can be managed using a GPIO device.**

# Expansion modules

## 2 auxiliary pumps

### DESCRIPTION

Those expansion modules allow to add ON-OFF-AUTO control of 2 additional pumps.

Available in 3 versions for 1, 2 or 3 HP pumps (single phase).

| | Code | Standard Pack | Standard weight in kg | Standard volume in m³ |
|---|---|---|---|---|
| Expansion module - 2 pumps 1 HP | 72731 | 1 | 3.00 | 0.028 |
| Expansion module - 2 pumps 2 HP | 72732 | 1 | 3.00 | 0.028 |
| Expansion module - 2 pumps 3 HP | 72733 | 1 | 3.00 | 0.028 |

# Expansion modules

## White & RGB lighting

### DESCRIPTION

Those expansion modules allow to add Lighting supply and control.

Provided with a 100 VA transformer.

Available in 2 versions: white light and RGB color light (NN compatible)

| | Code | Standard Pack | Standard weight in kg | Standard volume in m³ |
|---|---|---|---|---|
| Expansion module - white light | 70695 | 1 | 1.50 | 0.009 |
| Expansion module - RGB color light | 70696 | 1 | 1.50 | 0.009 |

# Expansion module - GPIO

### DESCRIPTION

This expansion module allows to add a GPIO device that brings 4 digital inputs and 4 digital outputs in addition to existing GPIO in Connect & Go cabinets.

Any standard product can be managed with ON, OFF and schedule controls or device status (such as pool cover for example).

| | Code | Standard Pack | Standard weight in kg | Standard volume in m³ |
|---|---|---|---|---|
| Expansion module - GPIO | 70770 | 1 | 3.00 | 0.020 |

# PVC VALVES AND FITTINGS

CEPEX®

38 PVC-U fittings
40 PVC-U manual ball valves
41 PVC-U check valves
41 PVC-U other valves
41 PVC-U automatic valves
42 Solvent cement, cleaner and tape

ASTRALPOOL®

43 Solvent cement, cleaner and tape
43 Pipe

## Other brands

45 Pipe

PVC-U FITTINGS

# PVC 90° elbow

## Solvent socket

| | Code | Standard Pack | Standard weight in kg | Standard volume in m³ |
|---|---|---|---|---|
| Ø 50 mm | 01716 | 60 | 9.5 | 0.0408 |
| Ø 63 mm | 01717 | 36 | 10.7 | 0.0408 |
| Ø 75 mm | 01718 | 21 | 9.2 | 0.0408 |
| Ø 90 mm | 01719 | 12 | 9.3 | 0.0408 |
| Ø 110 mm | 01720 | 14 | 19.1 | 0.082 |

# PVC 45° elbow

## Solvent socket

| | Code | Standard Pack | Standard weight in kg | Standard volume in m³ |
|---|---|---|---|---|
| Ø 50 mm | 32590 | 40 | 3.72 | 0.0204 |
| Ø 63 mm | 32591 | 20 | 3.56 | 0.0204 |
| Ø 75 mm | 01752 | 25 | 8.2 | 0.0408 |
| Ø 90 mm | 01753 | 15 | 8.3 | 0.0408 |
| Ø 110 mm | 01754 | 16 | 13.8 | 0.082 |

# PVC-Tee 90°

## Solvent socket

| | Code | Standard Pack | Standard weight in kg | Standard volume in m³ |
|---|---|---|---|---|
| Ø 50 mm | 01784 | 30 | 9.1 | 0.0408 |
| Ø 63 mm | 01785 | 24 | 10.7 | 0.0408 |
| Ø 75 mm | 01786 | 15 | 9 | 0.0408 |
| Ø 90 mm | 01787 | 8 | 7.9 | 0.0408 |
| Ø 110 mm | 01788 | 10 | 17.7 | 0.082 |

# PVC union

## Solvent socket

| | Code | Standard Pack | Standard weight in kg | Standard volume in m³ |
|---|---|---|---|---|
| Ø 50 mm | 01876 | 56 | 5.2 | 0.0204 |
| Ø 63 mm | 01877 | 34 | 5.4 | 0.0204 |
| Ø 75 mm | 01878 | 14 | 3.9 | 0.02 |
| Ø 90 mm | 01879 | 18 | 8.2 | 0.0408 |
| Ø 110 mm | 01880 | 12 | 9.1 | 0.0408 |

# PVC reducing bush

## Solvent socket

| | Code | Standard Pack | Standard weight in kg | Standard volume in m³ |
|---|---|---|---|---|
| Ø 63 mm x 50 mm | 01925 | 48 | 3.2 | 0.0102 |
| Ø 75 mm x 63 mm | 01928 | 28 | 2.4 | 0.01 |
| Ø 75 mm x 50 mm | 18685 | 28 | 3.5 | 0.01 |
| Ø 90 mm x 75 mm | 01929 | 36 | 5.4 | 0.02 |
| Ø 90 mm x 63 mm | 18687 | 36 | 6.3 | 0.02 |
| Ø 90 mm x 50 mm | 18688 | 36 | 6.7 | 0.02 |
| Ø 110 mm x 90 mm | 01930 | 16 | 4.6 | 0.02 |
| Ø 110 mm x 75 mm | 18689 | 16 | 5.5 | 0.02 |
| Ø 110 mm x 63 mm | 18690 | 16 | 5.3 | 0.02 |

# PVC adaptor nipple

## Solvent socket & BSP male thread

| | Code | Standard Pack | Standard weight in kg | Standard volume in m³ |
|---|---|---|---|---|
| Ø 50 mm x 40 mm x 1½" | 02085 | 68 | 5.9 | 0.0102 |
| Ø 63 mm x 50 mm x 2" | 02089 | 60 | 7.5 | 0.0204 |
| Ø 75 mm x 63 mm x 2"½ | 02091 | 24 | 5.1 | 0.02 |
| Ø 90 mm x 75 mm x 3" | 02094 | 12 | 3.9 | 0.02 |
| Ø 110 mm x 90 mm x 4" | 02097 | 6 | 4.1 | 0.02 |

# PVC adaptor bush

## Female solvent socket & BSP male thread

| | Code | Standard Pack | Standard weight in kg | Standard volume in m³ |
|---|---|---|---|---|
| Ø 50 mm x 1½" | 02106 | 72 | 6.5 | 0.0102 |
| Ø 63 mm x 2" | 02107 | 50 | 7.2 | 0.0204 |
| Ø 75 mm x 2"½ | 02108 | 24 | 6.5 | 0.02 |
| Ø 90 mm x 3" | 02109 | 28 | 12.3 | 0.0408 |
| Ø 110 mm x 4" | 02110 | 10 | 6.9 | 0.0408 |

# PVC 3 piece union

## Solvent socket

| | Code | Standard Pack | Standard weight in kg | Standard volume in m³ |
|---|---|---|---|---|
| Ø 50 mm | 02331 | 30 | 5.80 | 0.0204 |
| Ø 63 mm | 02332 | 12 | 4.44 | 0.0204 |
| Ø 75 mm | 02333 | 16 | 9.3 | 0.0408 |
| Ø 90 mm | 02334 | 12 | 10.1 | 0.0408 |
| Ø 110 mm | 02335 | 5 | 8.2 | 0.0408 |

# PVC 3 piece union

## Female solvent socket & BSP male thread

| | Code | Standard Pack | Standard weight in kg | Standard volume in m³ |
|---|---|---|---|---|
| Ø 50 mm x 1½" | 02357 | 30 | 6.70 | 0.0204 |
| Ø 63 mm x 2" | 02358 | 12 | 5.24 | 0.0204 |
| Ø 50 x 1"½ (with o-ring) | 07716 | 30 | 7.3 | 0.02 |
| Ø 63 x 2" (with o-ring) | 07717 | 12 | 5.2 | 0.02 |

PVC-U FITTINGS

# Sight check glass

## Solvent socket

| | Code | Standard Pack | Standard weight in kg | Standard volume in m³ |
|---|---|---|---|---|
| Ø 50 mm | 02387 | 12 | 5.1 | - |
| Ø 63 mm | 02388 | 12 | 7.5 | - |
| Ø 75 mm | 02389 | 3 | 7.7 | - |
| Ø 90 mm | 02390 | 4 | 12.6 | - |
| Ø 110 mm | 02391 | 2 | 8.6 | - |

* More PVC fittings in the Cepex catalogue

# Collector pipe for valve manifold

## DESCRIPTION

Made of PVC. Inlet connections, inner Ø 50 mm and 63 mm. Outlet connections Ø 50 and 63 mm.

| | Code | Standard Pack | Standard weight in kg | Standard volume in m³ |
|---|---|---|---|---|
| Connections Ø 50 mm | 31877 | 1 | - | - |
| Connections Ø 63 mm | 34407 | 1 | - | - |

PVC-U MANUAL BALL VALVES

# PVC pool ball valve

## DESCRIPTION

HDPE (polythene) ball seat. EPDM O-rings. "Antiblock" system.

| | Code | Standard Pack | Standard weight in kg | Standard volume in m³ |
|---|---|---|---|---|
| Ø 50 mm | 02502 | 10 | 7.61 | 0.0204 |
| Ø 63 mm | 02503 | 9 | 11.80 | 0.0408 |

# PVC ball valve - [STD] SERIES

## DESCRIPTION

HDPE (polythene) ball seat. EPDM O-rings. "Antiblock" system.

| | Code | Standard Pack | Standard weight in kg | Standard volume in m³ |
|---|---|---|---|---|
| Ø 50 mm | 36505 | 10 | 7.40 | 0.0204 |
| Ø 63 mm | 36506 | 10 | 12.70 | 0.0408 |
| Ø 75 mm | 36507 | 4 | 9.8 | 0.0408 |
| Ø 90 mm | 36508 | 2 | .1 | 0.0408 |
| Ø 110 mm | 36509 | 1 | 8.7 | 0.0408 |

PVC-U CHECK VALVES

# PVC spring check valve

## DESCRIPTION

Spring in stainless steel. EPDM O-rings. Vertical or horizontal installation.

| | Code | Standard Pack | Standard weight in kg | Standard volume in m³ |
|---|---|---|---|---|
| Ø 50 mm | 09015 | 12 | 7.80 | 0.0204 |
| Ø 63 mm | 09016 | 10 | 11.70 | 0.0408 |
| Ø 75 mm | 09017 | 4 | 9.8 | 0.0408 |
| Ø 90 mm | 09018 | 2 | 8.1 | 0.0408 |
| Ø 110 mm (DN80) | 09019 | 2 | 8.5 | 0.0408 |

* More valves and configurations in the Cepex catalogue

PVC-U OTHER VALVES

# 3-way rotary disc valve

## DESCRIPTION

3-way rotary disc valve in PVC-U with rotary flap to shut off one port. Can be used in circuits where the working pressure is not above 6 bar (90 psi); includes a lever that shows the closed port.

Sizes: Ø 50-63 mm and Ø 63-75 mm. Available in manual (lever) or automatic (electric actuator) mode. Designed for use in pools and spas. The manual valve can have 2 open ports and 1 shut off, 3 open ports or a partial adjustable opening, whilst the electric actuator can be turned from 90° to 180° and has a 220 VAC or 24 VAC connection.

| | Code | Standard Pack | Standard weight in kg | Standard volume in m³ |
|---|---|---|---|---|
| **3-way rotary disc valve solvent socket** | | | | |
| Manual Ø 63-75 mm | 41862 | 4 | 5.4 | 0.041 |
| Manual Ø 50-63 mm | 15765 | 8 | 6.7 | 0.041 |

* See the Cepex catalogue for more valves, including complete actuated valves offer

PVC-U AUTOMATIC VALVES

# 3-way automatic rotary disc valve

## DESCRIPTION

3-way rotary disc valve in PVC-U with rotary flap to shut off one port. Can be used in circuits where the working pressure is not above 6 bar (90 psi); includes a lever that shows the closed port.

Sizes: Ø 50-63 mm and Ø 63-75 mm. Available in manual (lever) or automatic (electric actuator) mode. Designed for use in pools and spas. The manual valve can have 2 open ports and 1 shut off, 3 open ports or a partial adjustable opening, whilst the electric actuator can be turned from 90° to 180° and has a 220 VAC or 24 VAC connection.

| | Code | Standard Pack | Standard weight in kg | Standard volume in m³ |
|---|---|---|---|---|
| **3-way rotary disc valve solvent socket** | | | | |
| Automatic Ø 50-63 mm. 220 VAC (180°) | 41863 | 1 | 1.4 | 0.041 |
| Automatic Ø 63-75 mm. 220 VAC (180°) | 59959 | 1 | 1.85 | 0.041 |
| Automatic Ø 50-63 mm. 24 VAC (180°) | 45866 | 1 | 1.4 | 0.041 |
| Automatic Ø 63-75 mm. 24 VAC (180°) | 59960 | 1 | 1.85 | 0.041 |
| Pack - 1 | 59955 | 1 | 1.4 | 0.041 |
| Automatic Ø 63-75 mm. 220 VAC (90°) | 41864 | 1 | 1.85 | 0.041 |
| Pack - 1 | 59956 | 1 | 1.4 | 0.041 |
| Automatic Ø 63-75 mm. 24 VAC (90°) | 43730 | 1 | 1.85 | 0.041 |

* See the Cepex catalogue for more valves, including complete actuated valves offer

SOLVENT CEMENT, CLEANER AND TAPE

# PVC Cleaner

| | Code | Standard Pack | Standard weight in kg | Standard volume in m³ |
|---|---|---|---|---|
| 0.125 l | 54740 | 28 | 4.7 | 0.026 |
| 0.5 l | 02432 | 15 | 8.1 | 0.026 |
| 1 l | 02431 | 12 | 11.0 | 0.036 |

# PVC Glue

| | Code | Standard Pack | Standard weight in kg | Standard volume in m³ |
|---|---|---|---|---|
| 0.125 l | 02429 | 30 | 5.6 | 0.024 |
| 0.50 l | 02427 | 15 | 8.0 | 0.026 |
| 1 l | 02426 | 12 | 13.0 | 0.036 |
| Pack - 28 | 02430 | - | 9.3 | - |
| 0.50 l with paint brush | 09043 | 15 | 8.1 | - |
| 1 l with paint brush | 09044 | 12 | 12.8 | - |

SOLVENT CEMENT, CLEANER AND TAPE

# PVC Cleaner

## DESCRIPTION

Liquid cleaner specially adequate for cleaning and degreasing pipes, coupling sockets and other PVC rigid fittings before gluing them together, and for removing excess glue.

| | Code | Standard Pack | Standard weight in kg | Standard volume in m³ |
|---|---|---|---|---|
| Cleaner 500 ml | 57685 | - | - | - |
| Cleaner 1000 ml | 57687 | - | - | - |

# Gel adhesive

## DESCRIPTION

For large diameter pressure pipes. Slow setting time, allowing correct positioning of the fittings and perfect cementation. Supplied with brush.

| | Code | Standard Pack | Standard weight in kg | Standard volume in m³ |
|---|---|---|---|---|
| 250 ml | 68593 | 36 | 11.18 | 0.02 |
| 500 ml | 68521 | 24 | 13.50 | 0.02 |
| 1000 ml | 68522 | 12 | 12.90 | 0.02 |

# Blue Adhesive

## Extra quick drying for flexible and rigid PVC pipes

## DESCRIPTION

Extra quick drying for flexible and rigid PVC pipes.

| | Code | Standard Pack | Standard weight in kg | Standard volume in m³ |
|---|---|---|---|---|
| 250 ml | 68518 | 36 | 11.20 | 0.02 |
| 500 ml | 68520 | 24 | 13.50 | 0.02 |
| 1000 ml | 68592 | 12 | 12.90 | 0.02 |

PIPE

# PVC pipe PN-10

| | Code | Standard Pack | Standard weight in kg | Standard volume in m³ |
|---|---|---|---|---|
| Ø 40 mm | 02708 | 5 m | - | - |
| Ø 50 mm | 02709 | 5 m | 45.0 | 1.14 |
| Ø 63 mm | 02710 | 6 m | 72.0 | 1.40 |
| Ø 75 mm | 02711 | 6 m | - | - |
| Ø 90 mm | 02712 | 6 m | - | - |
| Ø 110 mm | 02713 | 6 m | - | - |
| Ø 125 mm | 02714 | 6 m | - | - |
| Ø 140 mm | 02715 | 6 m | - | - |
| Ø 160 mm | 02716 | 6 m | - | - |
| Ø 180 mm | 02717 | 6 m | - | - |
| Ø 200 mm | 02718 | 6 m | - | - |
| Ø 250 mm | 02719 | 6 m | - | - |
| Ø 315 mm | 02720 | 6 m | - | - |

# fitt b-active : resistant, flexible, safe

**FITT B-Active Flex**: the EVO TECH technology makes the hose 6 times more resistant to cracking than other hoses - based on the requirements of the EN ISO 3994 standard, and protects it whilst preserving the high flexibility and narrow bending radius characteristics.

**FITT B-Active Rigid**: the SHOCK WAVE technology makes the pipe 40 times more shock resistant than the minimum required by the EN ISO 1452 standard, and therefore ideal for use even at the lowest temperatures.

**FITT B-Active Flex & Rigid** can be perfectly integrated in all projects, ensuring maximum safety, resistance and duration.

bactive.fitt.com
FITT.com

10 YEARS GUARANTEE*
10 YR INSURANCE COVERAGE*

* FITT offers a 10-year guarantee together with a special 10-year insurance coverage

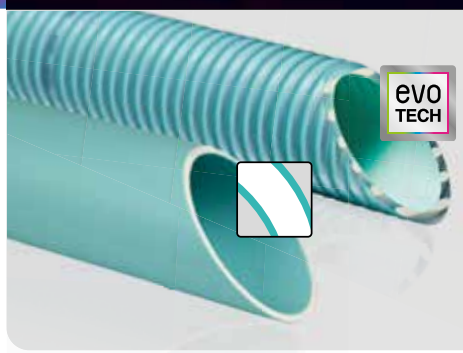


FITT B-Active Flex

FITT B-Active Rigid

**FITT B-Active Flex**

SPIRAL PROTECTION BARRIER
D-SHAPE PATENTED
CHLORINE DEFENCE SYSTEM PATENTED

**FITT B-Active Rigid**

SHOCK WAVE TECHNOLOGY
PVC-A POLIMERIC ALLOY
COLD RESISTANT

fitt®

PIPE

# Semi-rigid hose

## DESCRIPTION

Made of PVC to glue to pressure fittings using PVC adhesive grey colour.

| | Code | Standard Pack | Standard weight in kg | Standard volume in m³ |
|---|---|---|---|---|
| Ø 16 mm | 34587 | 25 m | 3.2 | 0.030 |
| Ø 16 mm | 34586 | 50 m | 6.2 | 0.040 |
| Ø 20 mm | 30754 | 25 m | 4.0 | 0.040 |
| Ø 20 mm | 28570 | 50 m | 9.1 | 0.060 |
| Ø 25 mm | 30755 | 25 m | 6.0 | 0.050 |
| Ø 25 mm | 28571 | 50 m | 11.0 | 0.042 |
| Ø 32 mm | 30756 | 25 m | 9.6 | 0.070 |
| Ø 32 mm | 28572 | 50 m | 16.7 | 0.065 |
| Ø 40 mm | 30757 | 25 m | 12.3 | 0.110 |
| Ø 40 mm | 28573 | 50 m | 23.0 | 0.109 |
| Ø 50 mm | 30758 | 25 m | 18.4 | 0.150 |
| Ø 50 mm | 28574 | 50 m | 37.0 | 0.178 |
| Ø 63 mm | 28575 | 25 m | 49.5 | 1.140 |
| Ø 75 mm | 34588 | 25 m | 33.3 | 0.300 |

# FITT B-Active Flex

## DESCRIPTION

- "FITT B-Active Flex is the flexible PVC spiral hose with inner anti-chlorine protective film (Chlorine Defence System patent), and rigid anti-crushing PVC spiral reinforcement (D-Shape patent). Even more resistant to mechanical stress thanks to the EVO TECH innovation that further strengthens the film covering the rigid spiral (Spiral Protection Barrier technology). The new EVO TECH technology makes the hose 6 times more resistant to cracking than other hoses.
- Ideal for embedded pools and SPAs, FITT B-Active Flex is the suction and delivery hose fully Made in Italy."
- "Conforms to Regulation (EU) no. 10/2011 for simulant A. Performance tests (mechanical and chemical) have been conducted in collaboration with the University of Padua – DTG Laboratory. Test certified by TÜV (test report no. MEC16173.00).
- Working temperature: –10°C/+60°C."

## TECHNICAL FEATURES

| Øe [mm] | Ps [bar] | vac [$mH_2O$] | Rc [mm] | L [m] | Quantity [rol/pal] |
|---|---|---|---|---|---|
| 50 | 6 | 9 | 125 | 25 | 12 |
| 50 | 6 | 9 | 125 | 50 | 8 |
| 63 | 4 | 9 | 125 | 25 | 6 |
| 63 | 4 | 9 | 125 | 50 | 4 |

## LOGISTICAL FEATURES

| Code | Product | External Ø (mm) | Roll length (m) | Weight (kg/roll) | Quantity (roll/pal) | Pallet dimensions (mm) |
|---|---|---|---|---|---|---|
| 69860 | FITT B-ACTIVE FLEX Ø50 25m | 50 | 25 | 19 | 12 | 800x1600xH1240 |
| 69861 | FITT B-ACTIVE FLEX Ø50 50m | 50 | 50 | 37,5 | 8 | 800x1600xH1360 |
| 69862 | FITT B-ACTIVE FLEX Ø63 25m | 63 | 25 | 24,5 | 6 | 1200x1000xH1280 |

PIPE

# FITT B-Active Rigid PVC-A

## DESCRIPTION

- FITT B-Active Rigid is the PVC-A pipe manufactured with Shock Wave technology featuring a 3-layer construction that guarantees shock resistance, in full compliance with the test requirements of the EN ISO 1452 standard. Resistant to handling shocks and adaptable to movements in the soil, FITT B-Active Rigid makes the pool safe and protected from damage during construction and subsequent use.
- "Conforms to Regulation (EU) no. 10/2011 for simulant A.
- Working temperature: –0°C/+40°C"

## TECHNICAL FEATURES

| Øe (mm) | Pw (bar) | Ps (bar) | Vac (m $H_2O$) | L (m) | Ls (mm) | Quantity (pcs/pal) |
|---|---|---|---|---|---|---|
| 50 | 10 | 30 | 10 | 4 | 50 | 260 |
| 50 | 10 | 30 | 10 | 2 | 50 | 260 |
| 50 | 16 | 40 | 10 | 4 | 50 | 260 |
| 50 | 16 | 40 | 10 | 2 | 50 | 260 |
| 50 | 16 | 40 | 10 | 1.18 | – | 360 |
| 63 | 10 | 25 | 10 | 4 | 60 | 180 |
| 63 | 10 | 25 | 10 | 2 | 60 | 180 |
| 63 | 16 | 32 | 10 | 4 | 60 | 180 |
| 63 | 16 | 32 | 10 | 2 | 60 | 180 |
| 63 | 16 | 32 | 10 | 1.18 | – | 225 |

## LOGISTICAL FEATURES

| Code | Product | External Ø (mm) | Length (m) | Weight (kg/roll) | Quantity (roll/pal) | Pallet dimensions (mm) |
|---|---|---|---|---|---|---|
| 73443 | FITT B-ACTIVE RIGID Ø63 L4 PN16 | 63 | 4 | - | - | - |
| 73444 | FITT B-ACTIVE RIGID Ø63 L2 PN16 | 63 | 2 | - | - | - |
| 73445 | FITT B-ACTIVE RIGID Ø50 L2 PN10 | 50 | 2 | - | - | - |
| 73446 | FITT B-ACTIVE RIGID Ø50 L4 PN10 | 50 | 4 | - | - | - |
| 73447 | FITT B-ACTIVE RIGID Ø50 L1,2 PN16 | 50 | 1.2 | - | - | - |
| 73448 | FITT B-ACTIVE RIGID Ø50 L2 PN16 | 50 | 2 | - | - | - |
| 73449 | FITT B-ACTIVE RIGID Ø50 L4 PN166 | 50 | 4 | - | - | - |
| 73450 | FITT B-ACTIVE RIGID Ø63 L2 PN10 | 63 | 2 | - | - | - |
| 73451 | FITT B-ACTIVE RIGID Ø63 L4 PN10 | 63 | 4 | - | - | - |
| 73452 | FITT B-ACTIVE RIGID Ø63 L1,2 PN16 | 63 | 1.2 | - | - | - |

# FITT Idroflex

## LOGISTICAL FEATURES

| Code | Product | External Ø (mm) | Operating pressure (bar) | Drainage (m $H_2O$) | Roll length (m) | Weight (kg/roll) | Quantity (roll/pal) | Pallet dimensions (mm) |
|---|---|---|---|---|---|---|---|---|
| 69852 | FITT IDROFLEX Ø25 50m | 25 | 7 | 7 | 50 | 12.5 | 12 | 800x1200xH1200 |
| 69853 | FITT IDROFLEX Ø32 50m | 32 | 7 | 7 | 50 | 21.0 | 16 | 1200x1200xH1200 |
| 69855 | FITT IDROFLEX Ø40 25m | 40 | 5 | 7 | 25 | 15.5 | 16 | 1200x1200xH1200 |
| 69854 | FITT IDROFLEX Ø40 50m | 40 | 5 | 7 | 50 | 30.5 | 5 | 800x1200xH1200 |
| 69857 | FITT IDROFLEX Ø50 25m | 50 | 5 | 7 | 25 | 16 | 12 | 800x1600xH1240 |
| 69856 | FITT IDROFLEX Ø50 50m | 50 | 5 | 7 | 25 | 31.5 | 8 | 800x1600xH1360 |
| 69858 | FITT IDROFLEX Ø63 25m | 63 | 4 | 7 | 25 | 23 | 6 | 1200x1000xH1280 |
| 69859 | FITT IDROFLEX Ø75 25m | 75 | 2.5 | 6 | 25 | 37 | 3 | 1200x1200xH1200 |
| 69963 | FITT IDROFLEX Ø75 25m | 32 | 7 | 7 | 25 | 7 | 12 | 1200x800xH1360 |
| 69966 | FITT IDROFLEX Ø75 25m | 20 | 7 | 7 | 25 | 4 | 48 | 1200x800xH1360 |

fitt revix

**The responsable hose for pool with 100% performances**

The first hose for underground pool that has the 30% of recycled materials inside and guarantees resistance, safety and flexibility at the same time

**100%** performances

**-10%** $CO_2$e emissions compared to FITT Idroflex

**Core-Shield technology**

- Core-Shield
- Recycled material
- D-Shape rigid spiral

**Core-Shield**
100% performances

**D-Shape**
Crushing resistance and high flexibility

**FITT POOL&SPA SOLUTIONS**

# FITT Revix

FITT Revix is the **PVC spiral flexible hose** with **30% of recycled material** inside and **rigid PVC reinforcement spiral crushing resistant (D-Shape Patent)**. The new patented technology **CORE SHIELD** guarantees **100% of performances**: high **resistance** to **cracking**, high **flexibility**, perfect **adhesion** with fittings with a **reduction of 10% of $CO_2$ emissions***. Ideal for embedded pools and spas, FITT Revix is the first sustainable hose for suction and delivery of water entirely **Made in Italy**.

5 YEARS GUARANTEE

*compared to FITT Idroflex

| Code | Ø external [mm] | Lenght [m] | Working pressure [bar] | Bening radius [mm] | Quantity (rot/plt) | Standard Volume [m³] |
|---|---|---|---|---|---|---|
| 76810 | 50 | 25 | 5 | 165 | 12 | 0.11 |
| 76811 | 50 | 50 | 5 | 165 | 8 | 0.17 |
| 76812 | 63 | 25 | 4 | 220 | 6 | 0.17 |

## Cram Project

With FITT Revix, FITT supports Fundació Fluidra for the protection and recovery of sea animals

Fundació FLUIDRA Llegat Joan Planes

CRAM

# POOL SURROUND EQUIPMENT

ASTRALPOOL

AQUA SPHERE


**51 POOL ACCESS - LADDERS**
- 51 Plascoat® model
- 52 Elegance model
- 52 Komfi model
- 53 Wall model
- 54 Standard model
- 55 Mixed model
- 56 Asymmetrical and easy access model

**58 POOL ACCESS - GRAB RAILS & HANDRAILS**

**58 POOL ACCESS - ANCHORING, HANDRAILS FIXATURES AND ACCESSORIES**

**61 JUMP BOARDS, TRAMPOLINES AND PLATFORMS**
- 61 Diving boards
- 62 Slides

**63 ASTRALPOOL BIKE**

**64 SHOWERS**
- 64 Iguazu
- 65 Pluvium
- 66 Niagara
- 69 Chrome
- 71 Angel
- 73 Loire

**75 SHOWERS - TRAYS AND ACCESSORIES**

**76 CANNONS & WATERFALLS**

**80 OVERFLOW CHANNEL GRATING**

**86 OVERFLOW CHANNEL GRATING - ACCESSORIES**


ZODIAC®


**88 CANNONS & WATERFALLS**

# Stainless steel ladders with Plascoat® technology

## THE PERFECT SOLUTION FOR SALTWATER POOLS

Pioneer on the market using the Plascoat® coating, commonly used in the most extreme environments.

Superior resistance to corrosion

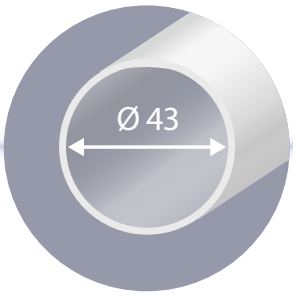


Ø 43 mm pipe handrail

Special non-slip steps

ASTRALPOOL

# Ladders with Plascoat® Technology

- Special treatment for higher endurance with Salt Water Chlorinator pools avoiding corrosion and rust.
- In-ground pool ladder. Suitable for new pool and rejuvenation ladders.
- Stainless steel Ø 43 mm pipe handrail.
- Special non-slip steps design ensures safety.
- Supplied with anchoring fixtures for connection to an equipotential outlet.
- Trimmed faceplate.

## DESCRIPTION

AISI-304L ladders with Plascoat® coating providing an extra-corrosion protection.

| | Code | Standard Pack | Standard weight in kg | Standard volume in m³ |
|---|---|---|---|---|
| 3 steps ladder | 76161 | 1 | 11.5 | 0.08 |
| 4 steps ladder | 76162 | 1 | 14 | 0.08 |

## TECHNICAL FEATURES

| Steps | A | B | C | D | E | F |
|---|---|---|---|---|---|---|
| 3 | 618 | 620 | 260 | 960 | 148 | 500 |
| 4 | 618 | 620 | 260 | 1220 | 148 | 500 |

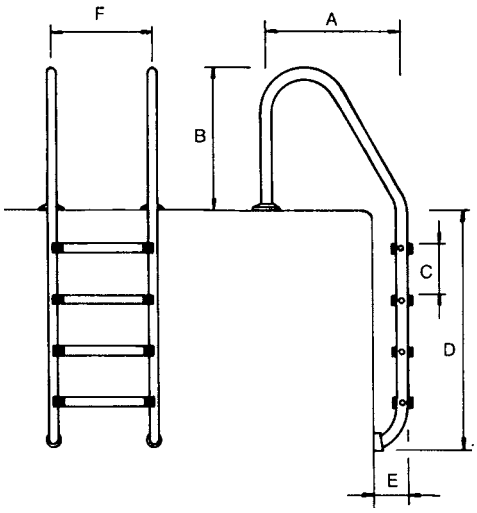

# Elegance

## DESCRIPTION

These sleek, stylish ladders with handrails have been designed to make it easy to get into a pool. Made of AISI 316L stainless steel with two anchoring points, the first step is double the standard size in a non-slip material for the greater safety and convenience of swimmers. Comes with 3 or 4 steps. To connect ground earth cable use Equipotential Anchor items 73318 or 73319.

| | Code | Standard Pack | Standard weight in kg | Standard volume in m³ |
|---|---|---|---|---|
| **Elegance ladders** | | | | |
| 2 steps + 1 safety step | 45782 | 1 | 14 | 0.089 |
| 3 steps + 1 safety step | 45783 | 1 | 15 | 0.089 |

Complies with Standard EN 16582-1:2015

## TECHNICAL FEATURES

| Reference | Steps | A | B |
|---|---|---|---|
| 45782 | 2 + 1 safety | 960 | 2430 |
| 45783 | 3 + 1 safety | 1220 | 2690 |

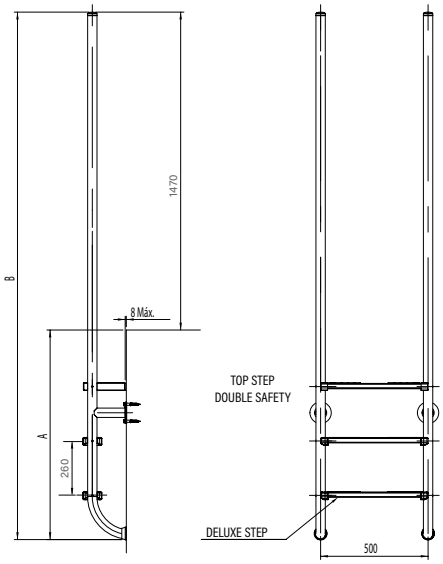


# Komfi

## DESCRIPTION

These standard ladders are made by handrails manufactured in Ø43mm and polished AISI-316L stainless steel tube and polypropylene steps. Its plastic steps ensure a comfortable tread when the user steps on and also avoids the possibility of slipping.

Dimensions: based on Standard ladders for Residential use.

| | Code | Standard Pack | Standard weight in kg | Standard volume in m³ |
|---|---|---|---|---|
| 2 steps | 73147 | 1 | 9.8 | 0.066 |
| 3 steps | 73148 | 1 | 13 | 0.076 |
| 4 steps | 73149 | 1 | 14 | 0.086 |
| 5 steps | 73150 | 1 | 15 | 0.097 |

Complies with Standard EN 16582-1:2015

# Wall model

- In-ground pool ladder.
- Stainless steel Ø 43 mm pipe handrail.
- Stainless steel steps. Special non-slip design ensures safety.
- Supplied with anchoring fixtures for connection to an equipotential outlet.
- Trimmed faceplate.

Complies with Standard EN 16582-1:2015

## TECHNICAL FEATURES

| Steps | A | B | C | D | E | F |
|---|---|---|---|---|---|---|
| 2 | 318 | 620 | 260 | 700 | 148 | 500 |
| 3 | 318 | 620 | 260 | 960 | 148 | 500 |
| 4 | 318 | 620 | 260 | 1220 | 148 | 500 |
| 5 | 318 | 620 | 260 | 1480 | 148 | 500 |

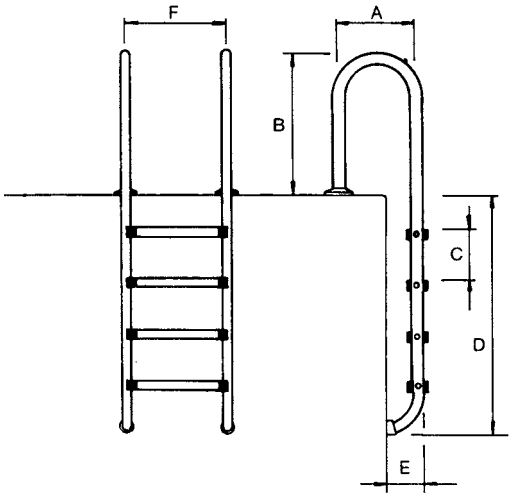

# Wall handrail

## with Luxe model steps

### DESCRIPTION

Rails & steps in AISI-316L.

| | Code | Standard Pack | Standard weight in kg | Standard volume in m³ |
|---|---|---|---|---|
| 2 steps ladder | 05480 | 1 | 9.0 | 0.05 |
| 3 steps ladder | 05481 | 1 | 10.5 | 0.06 |
| 4 steps ladder | 05482 | 1 | 12.4 | 0.06 |
| 5 steps ladder | 05483 | 1 | 13.7 | 0.07 |

# Wall handrail

## with Standard model steps

### DESCRIPTION

Rails & steps in AISI-304L.

| | Code | Standard Pack | Standard weight in kg | Standard volume in m³ |
|---|---|---|---|---|
| 2 steps ladder | 05492 | 1 | 9.0 | 0.05 |
| 3 steps ladder | 05493 | 1 | 12.7 | 0.06 |
| 4 steps ladder | 05494 | 1 | 14.8 | 0.06 |
| 5 steps ladder | 05495 | 1 | 13.6 | 0.07 |

# Standard model

- In-ground pool ladder.
- Stainless steel Ø 43 mm pipe handrail.
- Stainless steel steps. Special non-slip design ensures safety.
- Supplied with anchoring fixtures for connection to an equipotential outlet.
- Trimmed faceplate.

Complies with Standard EN 16582-1:2015

**Optional: American measurements without anchor point and optional plastic step.**

TECHNICAL FEATURES

| Steps | A | B | C | D | E | F |
|---|---|---|---|---|---|---|
| 2 | 618 | 620 | 260 | 700 | 148 | 500 |
| 3 | 618 | 620 | 260 | 960 | 148 | 500 |
| 4 | 618 | 620 | 260 | 1220 | 148 | 500 |
| 5 | 618 | 620 | 260 | 1480 | 148 | 500 |

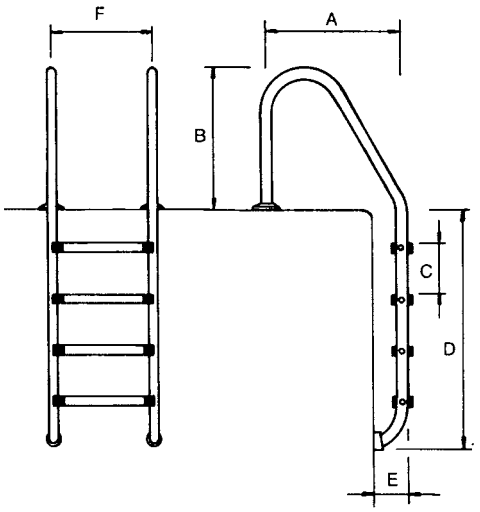

# Standard handrail

## with Luxe model steps

DESCRIPTION

Rails & steps in AISI-316L.

| | Code | Standard Pack | Standard weight in kg | Standard volume in m³ |
|---|---|---|---|---|
| 2 steps ladder | 05476 | 1 | 9.8 | 0.07 |
| 3 steps ladder | 05477 | 1 | 11.5 | 0.08 |
| 4 steps ladder | 05478 | 1 | 14.0 | 0.08 |
| 5 steps ladder | 05479 | 1 | 15.0 | 0.10 |

# Standard handrail

## with Standard model steps

DESCRIPTION

Rails & steps in AISI-304L.

| | Code | Standard Pack | Standard weight in kg | Standard volume in m³ |
|---|---|---|---|---|
| 2 steps ladder | 05488 | 1 | 9.6 | 0.07 |
| 3 steps ladder | 05489 | 1 | 12.0 | 0.08 |
| 4 steps ladder | 05490 | 1 | 15.0 | 0.09 |
| 5 steps ladder | 05491 | 1 | 15.0 | 0.09 |

# Mixed model

- In-ground pool ladder.
- Stainless steel Ø 43 mm pipe handrail.
- Stainless steel steps. Special non-slip design ensures safety.
- Supplied with anchoring fixtures for connection to an equipotential outlet.
- Trimmed faceplate.

Complies with Standard EN 16582-1:2015

## TECHNICAL FEATURES

| Steps | A | B | C | D | E | F | G |
|---|---|---|---|---|---|---|---|
| 2 | 318 | 620 | 260 | 700 | 148 | 500 | 491 |
| 3 | 318 | 620 | 260 | 960 | 148 | 500 | 491 |
| 4 | 318 | 620 | 260 | 1220 | 148 | 500 | 491 |
| 5 | 318 | 620 | 260 | 1480 | 148 | 500 | 491 |

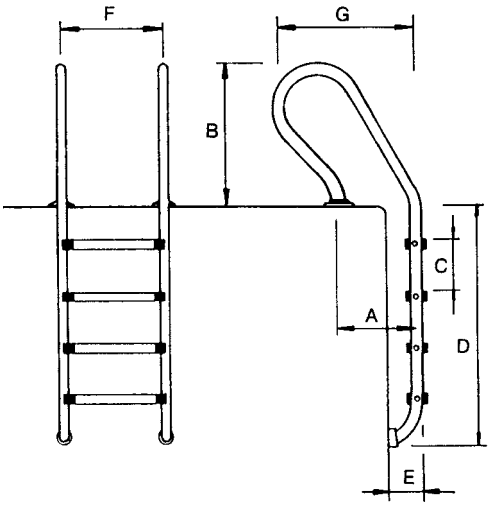

# Mixed handrail

## with Luxe model steps

### DESCRIPTION

Rails & steps in AISI-316L.

| | Code | Standard Pack | Standard weight in kg | Standard volume in m³ |
|---|---|---|---|---|
| 2 steps ladder | 05484 | 1 | 9.7 | 0.07 |
| 3 steps ladder | 05485 | 1 | 11.5 | 0.08 |
| 4 steps ladder | 05486 | 1 | 12.6 | 0.09 |
| 5 steps ladder | 05487 | 1 | 14.8 | 0.09 |

# Mixed handrail

## with Standard model steps

### DESCRIPTION

Rails & steps in AISI-304L.

| | Code | Standard Pack | Standard weight in kg | Standard volume in m³ |
|---|---|---|---|---|
| 2 steps ladder | 05496 | 1 | 9.7 | 0.07 |
| 3 steps ladder | 05497 | 1 | 11.4 | 0.08 |
| 4 steps ladder | 05498 | 1 | 15.3 | 0.09 |
| 5 steps ladder | 05499 | 1 | 14.8 | 0.10 |

# Asymmetrical and easy access model

## Standard asymmetrical model

### DESCRIPTION

Standard model ladder for embedded pools. Handrails in polished Stainless Steel (Ø 43 mm) pipe. Stainless steel steps with non-slip surface. Its careful design helps to reduce the danger of slips or cuts. Complete with anchoring fixtures and earthing connection. Rails & steps in AISI-316L.

| | Code | Standard Pack | Standard weight in kg | Standard volume in m³ |
|---|---|---|---|---|
| 1 "Luxe" step + 1 double safety step | 19938 | 1 | 13.0 | 0.07 |
| 2 "Luxe" steps + 1 double safety step | 19939 | 1 | 13.9 | 0.08 |
| 3 "Luxe" steps + 1 double safety step | 19940 | 1 | 15.8 | 0.10 |
| 4 "Luxe" steps + 1 double safety step | 19941 | 1 | 17.0 | 0.10 |

Complies with Standards
EN 13451-1
EN 13451-2

### TECHNICAL FEATURES

| Code | Steps | A | B |
|---|---|---|---|
| 19938 | 2 | 1450 | 700 |
| 19939 | 3 | 1710 | 960 |
| 19940 | 4 | 1970 | 1220 |
| 19941 | 5 | 2230 | 1480 |

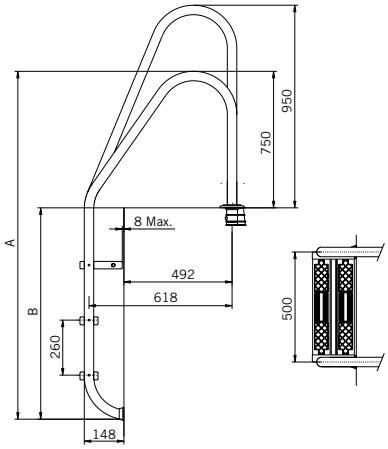

## Mixed asymmetrical model

### DESCRIPTION

Stairs with Mixed model handrails, for embedded pools, made of polished Stainless Steel (Ø 43 mm) pipe. Its careful design helps to reduce the danger of slips or cuts. Complete with anchoring fixtures and earthing connection. LUXE handrails and steps in AISI-316L.

| | Code | Standard Pack | Standard weight in kg | Standard volume in m³ |
|---|---|---|---|---|
| 2 "Luxe" steps + 1 double safety step | 19943 | 1 | 14.0 | 0.08 |
| 3 "Luxe" steps + 1 double safety step | 19944 | 1 | 15.6 | 0.09 |
| 4 "Luxe" steps + 1 double safety step | 19945 | 1 | 17.5 | 0.10 |

Complies with Standards
EN 13451-1
EN 13451-2

### TECHNICAL FEATURES

| Code | Steps | A | B |
|---|---|---|---|
| 19943 | 3 | 1710 | 960 |
| 19944 | 4 | 1970 | 1220 |
| 19945 | 5 | 2230 | 1480 |

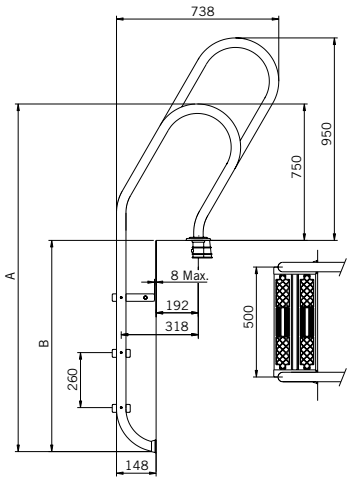

# Asymmetrical and easy access model

## Easy access model

### DESCRIPTION

Ladder width of 500 mm. Handrails in polished stainless steel (Ø 43 mm) pipe. With anchoring fixtures and earthing connection. Polished finish. With anchoring fixtures for earth connection. Rails and non-slip steps in polished AISI-316L.

| | Code | Standard Pack | Standard weight in kg | Standard volume in m³ |
|---|---|---|---|---|
| 3-step ladder | 07782 | 1 | 21.6 | 0.145 |
| 4-step ladder | 11979 | 1 | 25.9 | 0.202 |

### TECHNICAL FEATURES

| Code | Steps | A | B | C | D | E | F |
|---|---|---|---|---|---|---|---|
| 07782 | 3 | 1835 | 750 | 260 | 243 | 490 | 500 |
| 11979 | 4 | 2085 | 750 | 260 | 243 | 490 | 500 |

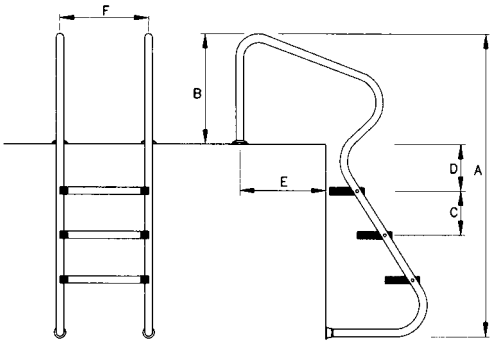

## Above-ground pool

### safety ladder with platform

### DESCRIPTION

Ladder manufactured in AISI-304L stainless steel Ø43 pipe with a bright satin finish and plastic treads.

White steps and plastic platform. Non-slip steps and platform. Safe pool access. Ladder maximum load: 150 kg.

| | Code | Standard Pack | Standard weight in kg | Standard volume in m³ |
|---|---|---|---|---|
| **For above-ground pool height** | | | | |
| 1 m | 67656 | 1 | - | - |
| 1.20 or 1.35 m | 67657 | 1 | - | - |
| 1,50 m | 67658 | 1 | - | - |

EN 16582-1:2015

Complies with Standard EN 16582-1:2015

### TECHNICAL FEATURES

| Code | Steps | A | B | C | D | E | F | G | H | I | J | K |
|---|---|---|---|---|---|---|---|---|---|---|---|---|
| 67656 | 3 | 1856 | 1204 | 400 | 317 | 1000 | 400 | 317 | 1433 | 344 | 506 | 797 |
| 67657 | 4 | 2094 | 1442 | 350 | 285 | 1350 | 350 | 285 | 1644 | 344 | 506 | 808 |
| 67658 | 5 | 2378 | 1727 | 350 | 285 | 1500 | 350 | 285 | 1899 | 344 | 506 | 805 |

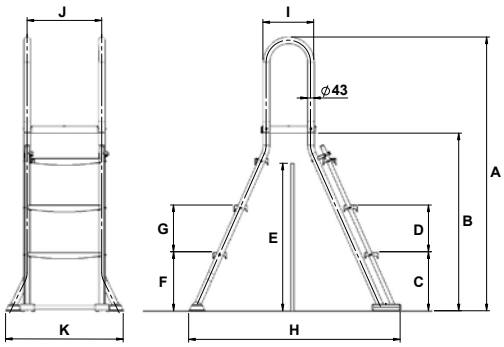

POOL ACCESS - GRAB RAILS & HANDRAILS

# Split ladder - Bottom half

Complies with Standard EN 16582-1:2015

## DESCRIPTION

Rails and steps in polished AISI-316L stainless steel (Ø 43 mm). Attachment with fixing plates, gaskets, screws and wall plugs. To connect ground earth cable use Equipotential Anchor items 73318 or 73319.

| | Code | Standard Pack | Standard weight in kg | Standard volume in m³ |
|---|---|---|---|---|
| 2 "Luxe" steps | 01456 | 1 | 5.0 | 0.04 |
| 3 "Luxe" steps | 01457 | 1 | 6.3 | 0.04 |
| 4 "Luxe" steps | 01458 | 1 | 7.7 | 0.05 |
| 5 "Luxe" steps | 01459 | 1 | 9.2 | 0.07 |

# Stainless Steel Handrails

## DESCRIPTION

Polished Ø 43 mm AISI-316L stainless steel pipes. With fixing plates (including gaskets, screws and wall plugs).

| | Code | Standard Pack | Standard weight in kg | Standard volume in m³ |
|---|---|---|---|---|
| Length 0.5 m | 00051 | 2 | 2.8 | 0.02 |
| Length 1 m | 00052 | 2 | 4.3 | 0.04 |
| Length 2 m | 00053 | 2 | 7.9 | 0.09 |
| Length 2.5 m | 00054 | 2 | 9.5 | 0.11 |

*** 1 additional year warranty. For more information see the warranty certificate in the manual.**

POOL ACCESS - ANCHORING, HANDRAILS FIXATURES AND ACCESSORIES

# Double non-slip safety step

## DESCRIPTION

AISI-316L stainless steel with bright satin finish. For all in-ground pool ladder models.

| | Code | Standard Pack | Standard weight in kg | Standard volume in m³ |
|---|---|---|---|---|
| Safety step | 70662 | 1 | 2.05 | 0.003 |

# Anchoring sockets

## DESCRIPTION

In plastic, with connection to an equipotential circuit.

| | Code | Standard Pack | Standard weight in kg | Standard volume in m³ |
|---|---|---|---|---|
| For Ø 43 mm pipe. | 00042 | 50 | 7.0 | 0.03 |
| For Ø 48 mm pipe. | 07661 | - | - | - |

00043 08727

# Articulated anchoring sockets

## DESCRIPTION

In polished Stainless Steel (AISI-304L) for a ladder with a Ø 43 mm pipe.

| | Code | Standard Pack | Standard weight in kg | Standard volume in m³ |
|---|---|---|---|---|
| **Articulated anchoring socket** | | | | |
| without base plate | 00043 | 1 | 0.93 | 0.002 |
| with base plate | 08727 | 1 | 1.0 | 0.002 |

# Removable anchoring socket with base plate

## DESCRIPTION

In polished stainless steel (AISI-316L) for a Ø 43 mm pipe with gaskets, wall plugs and screws.

| | Code | Standard Pack | Standard weight in kg | Standard volume in m³ |
|---|---|---|---|---|
| Set of 2 units | 07331 | 1 | 1.00 | 0.003 |

# Anchor with locking bolts

## DESCRIPTION

Made of polished AISI-316L stainless steel. For a Ø 43 mm pipe.

| | Code | Standard Pack | Standard weight in kg | Standard volume in m³ |
|---|---|---|---|---|
| Anchoring sockets | 00143 | 2 | 1.2 | 0.003 |

# Ladder foot pad

## DESCRIPTION

Made of plastic, the angle can be adjusted by rotating the eye ball socket. Recommended for liner pools.

| | Code | Standard Pack | Standard weight in kg | Standard volume in m³ |
|---|---|---|---|---|
| For Ø 43 mm pipe | 00045 | 50 | 12.6 | 0.03 |
| For Ø 28 mm pipes | 00046 | 50 | 14.0 | 0.03 |

# Tee bar

## DESCRIPTION

Polished Ø 43 mm AISI-316L stainless steel pipes.

| | Code | Standard Pack | Standard weight in kg | Standard volume in m³ |
|---|---|---|---|---|
| With fixing plates (including gaskets, screws and wall plugs) | 00056 | 1 | 2.09 | 0.01 |

# Equipotential anchor

## DESCRIPTION

The aim of this accessory for ladders is to solve the problem of not having the possibility to connect ground earth cable to ladders that do not have an anchoring on the pool beach like: Elegance and split ladders - items 45782, 45783, 01456, 01457, 01458, 01459, 08090, 08091 and 08092.

It is mandatory by norms to connect metallic ladders to ground earth in order to have proper electrical connections. Moreover, it is highly recommended to avoid corrosion.

Equipotential anchor for ladders, manufactured in AISI-304L stainless steel and commercialized for concrete and liner pools. The anchors are composed of a recessed base on the ground, washer, screws and the equipotential bonding.

Each ladder needs to 2 units.

| | Code | Standard Pack | Standard weight in kg | Standard volume in m³ |
|---|---|---|---|---|
| Concrete pools | 73318 | 1 | 0.45 | 0.002 |
| Liner pools | 73319 | 1 | 0.50 | 0.002 |

# Dynamic flexible springboard

## DESCRIPTION

Wide springboard made of polyester resin and fibreglass. Resistant to UV exposure and adverse weather conditions. Non-slip surface covering the entire board. Supplied with anchoring fixtures.

| | Code | Standard Pack | Standard weight in kg | Standard volume in $m^3$ |
|---|---|---|---|---|
| Length 1.61 m. Width 0.46 m | 21392 | 1 | 22.0 | 0.335 |

# Dynamic 1200 Diving Board

## DESCRIPTION

Wide springboard made of polyester resin and fibreglass. Resistant to UV exposure and adverse weather conditions. Non-slip surface covering the entire board. Supplied with anchoring fixtures.

| | Code | Standard Pack | Standard weight in kg | Standard volume in $m^3$ |
|---|---|---|---|---|
| Length 1.20 m. Width 0.40 m | 20090 | 1 | 20.0 | 0.325 |

# Dynamic Diving Board

## DESCRIPTION

Wide springboard made of polyester resin and fibreglass, with non-slip surface. Grab rails and supports made of stainless steel with matt finish. Supplied with anchoring fixtures.

| | Code | Standard Pack | Standard weight in kg | Standard volume in $m^3$ |
|---|---|---|---|---|
| Length 2 m, Width 0.60 m | 23199 | 1 | 50.0 | 1.585 |
| Length 2.30 m, Width 0.60 m | 23200 | 1 | 52.0 | 1.585 |

# Dolphin Model

## DESCRIPTION

Flexible Polyester and fibreglass springboard in light blue. Supplied with anchoring fixtures.

| | Code | Standard Pack | Standard weight in kg | Standard volume in $m^3$ |
|---|---|---|---|---|
| Length 1.6 m. Height 0.35 m | 00076 | 1 | 22.0 | 0.138 |

# Ballesta Model

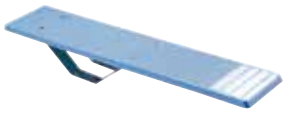

## DESCRIPTION

Light blue Polyester and fibreglass springboard. Springboard bracket made of galvanized Steel. Supplied with anchoring fixtures.

| | Code | Standard Pack | Standard weight in kg | Standard volume in m³ |
|---|---|---|---|---|
| Length 1.8 m, Height 0.25 m, Width 0.4 m | 00077 | 1 | 27.0 | 0.084 |
| Length 1.4 m, Height 0.25 m, Width 0.4 m | 00078 | 1 | 25.0 | 0.072 |

# Elevated Model

## DESCRIPTION

Base laminated in ivory-coloured Polyester and fibreglass, with light blue board. With 2 stainless steel handrails. Non-slip step and board. Supplied with anchoring fixtures.

| | Code | Standard Pack | Standard weight in kg | Standard volume in m³ |
|---|---|---|---|---|
| Length 2 m Height 0.55 m Width 0.4 m | 00068 | 1 | 38.0 | 0.850 |
| Length 2.5 m Height 0.75 m Width 0.46 m | 00069 | 1 | 68.0 | 1.380 |

# Platform

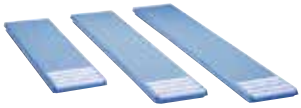

## DESCRIPTION

Light blue polyester and fibreglass boards with non-slip surface. Anchoring fixtures are not supplied.

| | Code | Standard Pack | Standard weight in kg | Standard volume in m³ |
|---|---|---|---|---|
| **Width 0.40 m** | | | | |
| Length 1.4 m | 00060 | 1 | 13.0 | 0.036 |
| Length 1.8 m | 00061 | 1 | 16.0 | 0.046 |
| Length 2.0 m | 00062 | 1 | 18.0 | 0.050 |
| Length 2.3 m | 00063 | 1 | 22.0 | 0.060 |
| **Width 0.46 m** | | | | |
| Length 2.5 m | 00064 | 1 | 31.0 | 0.080 |
| Length 3.2 m | 00065 | 1 | 46.0 | 0.100 |

# Diving board brackets

## DESCRIPTION

Made of polished AISI-304L stainless steel, with platform fixing bolts.

| | Code | Standard Pack | Standard weight in kg | Standard volume in m³ |
|---|---|---|---|---|
| For boards up to 2.30 m in length | 14586 | 1 | 8.0 | 0.040 |
| For boards from 2.5 to 3.2 m in length | 72594 | 1 | 8.4 | 0.102 |

Complies with Standard EN 17232

Complies with Standard EN 71-8

Complies with Standard EN 1176

# Curve water slide H130 CD

## DESCRIPTION

Rotmolded slide 130 cm high with non-slip steps and handrails. Equipped with a water intake and diffuser to facilitate sliding. UV8 Sun protection and suitable for saline chlorination. Available in Granite and Sand color.

| | Code | Standard Pack | Standard weight in kg | Standard volume in m³ |
|---|---|---|---|---|
| H130 CD Sand colour | 76417 | 1 | 66 | 1.1 |
| H130 CD Granite colour | 76420 | 1 | 66 | 1.1 |

Complies with Standard EN 17232

Complies with Standard EN 71-8

Complies with Standard EN 1176

# Curve water slide H150 CD

## DESCRIPTION

Rotmolded slide 150 cm high with non-slip steps and handrails. Equipped with a water intake and diffuser to facilitate sliding. UV8 Sun protection and suitable for saline chlorination. Available in Granite and Sand color.

| | Code | Standard Pack | Standard weight in kg | Standard volume in m³ |
|---|---|---|---|---|
| H150 CD Sand colour | 76416 | 1 | 66 | 1.1 |
| H150 CD Granite colour | 76419 | 1 | 66 | 1.1 |

ASTRALPOOL BIKE

# AstralPool Bike

## DESCRIPTION

Aquabike made of square and rectangular polished AISI-316L stainless steel pipe. Ideal for gyms, wellness centres, spas, medical facilities, hotels and private pools.

- Adjustable height of saddle and handlebar.
- For use in public and residential pools from 1 to 1.5 metres in depth.
- Ergonomic.
- Pedals made of PUR.
- Easy to move about.

| | Code | Standard Pack | Standard weight in kg | Standard volume in m³ |
|---|---|---|---|---|
| AstralPool Bike | 67333 | 1 | 20 | 0.12 |

# Iguazu

## Iguazu shower

### DESCRIPTION

Matt AISI-316L stainless steel shower for hot and cold water with a white acrylic front panel. Adjustable chromed brass anti-limescale shower-head and 2 mist spray jets controlled by a 2-way control valve. The flow rate and the water temperature are regulated by a mixer valve.

| | Code | Standard Pack | Standard weight in kg | Standard volume in m³ |
|---|---|---|---|---|
| Iguazu Shower | 53874 | 1 | 27 | 0.163 |

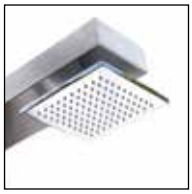
SHOWERHEAD

MIXER TAP

BODY JETS

## Iguazu solar shower

### DESCRIPTION

Matt AISI-316L stainless steel solar shower with a white acrylic front panel. Adjustable chromed brass anti-limescale shower-head and 2 mist spray jets controlled by a 2-way control valve. With a cold water inlet, it enables the water to be heated by means of a 30 litre aluminium accumulator tank, taking advantage of the sun's energy.

| | Code | Standard Pack | Standard weight in kg | Standard volume in m³ |
|---|---|---|---|---|
| Iguazu Solar Shower | 56933 | 1 | 32 | 0.163 |

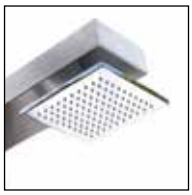
SHOWERHEAD

MIXER TAP

BODY JETS

# Pluvium

## Pluvium shower

### DESCRIPTION

Shower made of tropical wood combined with glossy AISI-316L stainless steel. Mixer valve for hot and cold water control. Adjustable shower head with anti-limescale system. Its minimalist and compact design provides an elegant and modern image for the pool environment and its high quality materials give it a long service life and greater resistance to weathering and corrosion.

Height of the shower head from the ground: 2.04 m.

| | Code | Standard Pack | Standard weight in kg | Standard volume in m³ |
|---|---|---|---|---|
| Pluvium Shower with shower tray | 43583 | 1 | 38 | 0.169 |
| Pluvium Shower without shower tray | 43432 | 1 | 27 | 0.136 |

SHOWERHEAD

MIXER TAP

RECOMMENDED

Stainless steel polish/cleaner

See P. 335

## Pluvium solar shower

### DESCRIPTION

Solar shower made of tropical wood combined with glossy AISI-316L stainless steel. It includes a 30 L aluminium tank. Mixer valve for hot and cold water control. Adjustable shower head with anti-limescale system. Its minimalist and compact design provides an elegant and modern image for the pool environment and its high quality materials give it a long service life and greater resistance to weathering and corrosion.

Height of the shower head from the ground: 2.04 m.

| | Code | Standard Pack | Standard weight in kg | Standard volume in m³ |
|---|---|---|---|---|
| Pluvium Solar Shower without shower tray | 43435 | 1 | 37 | 0.225 |

Energy Efficient

# Niagara

## Niagara shower

### DESCRIPTION

Shower made of polished AISI-304L stainless steel with a square adjustable shower head and a flow-regulating valve.

| | Code | Standard Pack | Standard weight in kg | Standard volume in m³ |
|---|---|---|---|---|
| Niagara Shower | 53872 | 1 | 22 | 0.125 |

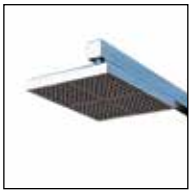

SHOWERHEAD

KNOB

## Niagara touchless shower

### DESCRIPTION

The Niagara touchless shower incorporates a proximity sensor that works with battery for turning on the shower without contact. Its minimalist design and the high quality of its materials provide you with an elegant and modern image.

**TECHNICAL FEATURES:**

- Made of AISI-304L polished stainless steel
- Water inlet connection ½" BSP INT
- Ground anchoring with screws
- Touchless system with sensor detection angle 15 degrees (conical)
- 6V DC Power supply (4xAA 1.5V). Batteries not included.
- Sensor protection class IP67
- Life test 500.000 cycles
- Working pressure 1-4 bar
- Max. temperature water 75ºC

| | Code | Standard Pack | Standard weight in kg | Standard volume in m³ |
|---|---|---|---|---|
| Niagara touchless Shower | 74102 | 1 | 23 | 0.125 |

SHOWERHEAD

SENSOR

# Niagara

## Niagara solar shower

+ User comfort
+ Energy saving
+ Easy to install

Energy Efficient

### DESCRIPTION

Shower made of polished AISI-304L stainless steel. With a single cold water inlet, it enables the water to be heated by means of a 30 L aluminium accumulator tank, taking advantage of the sun's energy. It has a mixer valve and a square adjustable anti-limescale shower head.

| | Code | Standard Pack | Standard weight in kg | Standard volume in $m^3$ |
|---|---|---|---|---|
| Niagara Solar Shower | 53873 | 1 | 25 | 0.26 |

# COMFORT & ELEGANCE FOR YOUR GARDEN

## SOLAR AND NON-SOLAR CHROME SHOWERS

With an elegant, streamlined design, the AstralPool Solar and Non-Solar Chrome showers range stands out for its modern vintage style, in a wide range of colors and finishes.

You can choose the one that best fits in with your pool surroundings.



Wide range of colors and finishes both models

MADE IN EUROPE

ASTRALPOOL®

Solar Chrome Shower

Non-Solar Chrome Shower

# Chrome

## Chrome shower

### DESCRIPTION

Featuring the same elegant, streamlined look of its solar counterpart, the AstralPool Chrome Non-Solar Shower has a wide range of finishes that will allow you to choose the best option for your garden.

It has a shower head with an anti-limescale system and a rain effect so that you can enjoy a relaxing experience before and after every swim.

**TECHNICAL SPECIFICATIONS:**

- AISI-304L stainless steel tube and Aluminum framework.
- Wide range of colors.
- Anti-limescale shower head and rain effect.
- Foot washer tap.
- Easy installation: inlet underneath or back/lateral (compatible with hose connection).

| | Code | Standard Pack | Standard weight in kg | Standard volume in m³ |
|---|---|---|---|---|
| **Metallic** | | | | |
| Chrome Non-Solar Shower anthracite S.S. | 74054 | 1 | 9 | 0.11 |
| Chrome Non-Solar Shower silver | 74054CL12 | 1 | 9 | 0.11 |
| Chrome Non-Solar Shower anthracite copper | 74055 | 1 | 9 | 0.11 |
| **Colour range** | | | | |
| Chrome Non-Solar Shower blue | 74054CL153 | 1 | 9 | 0.11 |
| Chrome Non-Solar Shower red | 74054CL154 | 1 | 9 | 0.11 |
| Chrome Non-Solar Shower green | 74054CL155 | 1 | 9 | 0.11 |
| Chrome Non-Solar Shower orange | 74054CL156 | 1 | 9 | 0.11 |

### PRODUCT DETAILS - EXAMPLE OF ITEM 74055

SHOWERHEAD

MIXER TAP

FOOT WASH

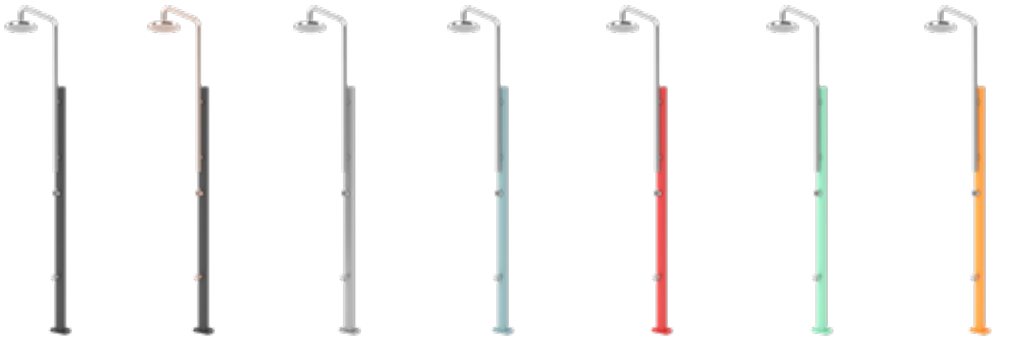

74054 | 74055 | 74054CL12 | 74054CL153 | 74054CL154 | 74054CL155 | 74054CL156

# Chrome

## Chrome solar shower

MADE IN EUROPE

PROFESSIONAL ADVICE RECOMMENDED

Energy Efficient

### DESCRIPTION

With an elegant, streamlined design, the AstralPool Chrome Solar Shower stands out for its modern vintage style, in a wide range of colors and fi nishes so that you can choose the one that best fi ts in with your pool surroundings. Enjoy a relaxing experience before and after every swim thanks to its large 30 l tank to obtain hot water without consuming energy. This green solution for the daily use of your pool contributes to looking after the environment, as well as your health and that of others.

**TECHNICAL SPECIFICATIONS:**

- A 30 l hot water tank – The leading environmentally friendly system (sunlight heats the water) in the market.
- AISI-304L Stainless Steel tube and Aluminum framework.
- Wide range of metallic finishes and colors.
- Anti-limescale shower head and rain effect.
- Hot and cold water mixer tap.
- Foot washer tap.
- Ease of maintenance: drainage for emptying the shower in winter to prevent damage and wear.
- Back inlet compatible with hose connection.

| | Code | Standard Pack | Standard weight in kg | Standard volume in m³ |
|---|---|---|---|---|
| **Metallic** | | | | |
| Chrome Solar Shower anthracite S.S. | 74052 | 1 | 13.5 | 0.25 |
| Chrome Solar Shower silver | 74052CL12 | 1 | 13.5 | 0.25 |
| Chrome Solar Shower anthracite copper | 74053 | 1 | 13.5 | 0.25 |
| **Colour range** | | | | |
| Chrome Solar Shower blue | 74052CL153 | 1 | 13.5 | 0.25 |
| Chrome Solar Shower red | 74052CL154 | 1 | 13.5 | 0.25 |
| Chrome Solar Shower green | 74052CL155 | 1 | 13.5 | 0.25 |
| Chrome Solar Shower orange | 74052CL156 | 1 | 13.5 | 0.25 |

### PRODUCT DETAILS - EXAMPLE OF ITEM 74053

SHOWERHEAD

MIXER TAP

FOOT WASH

74052 74053 74052CL12 74052CL153 74052CL154 74052CL155 74052CL156

# Angel

## Angel shower

### DESCRIPTION

AISI-304L polished stainless steel (Ø 43 mm) shower with 1 chrome anti-limescale showerhead and 1 flow opening valve. With 00107 anchoring fixture incorporated (see page 75).

| | Code | Standard Pack | Standard weight in kg | Standard volume in m³ |
|---|---|---|---|---|
| Angel Shower | 52717 | 1 | 5.6 | 0.43 |

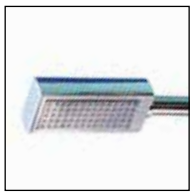
SHOWERHEAD

KNOB

## Angel shower with footwash

### DESCRIPTION

AISI-304L polished stainless steel (Ø 43 mm) shower with 1 chrome anti-limescale showerhead and 1 flow opening valve. Includes footwash tap. With 00107 anchoring fixture incorporated (see page 75).

| | Code | Standard Pack | Standard weight in kg | Standard volume in m³ |
|---|---|---|---|---|
| Angel Shower with footwash | 52718 | 1 | 5.6 | 0.43 |

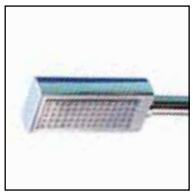
SHOWERHEAD

KNOB

FOOTWASH TAP

# Angel

Energy Efficient

## Angel solar shower

+ User comfort
+ Energy saving
+ Easy to install

### DESCRIPTION

Grey aluminium shower. With a cold water inlet, it enables the water to be heated by means of a 30 litre aluminium accumulator tank, taking advantage of the sun's energy. It has a mixer valve and an anti-limescale shower head.

| | Code | Standard Pack | Standard weight in kg | Standard volume in $m^3$ |
|---|---|---|---|---|
| Angel Solar Shower | 56932 | 1 | 13 | 0.152 |

SHOWERHEAD

MIXER TAP

SHOWERS

# Loire solar shower

Energy Efficient

## DESCRIPTION

The Loire solar shower has a smart and modern style merged with a simple design with soft shapes and round lines. It is available in different colors to adapt the shower to the environment of your garden.

Enjoy a relaxing experience before and after every bath thanks to it's 25L tank that allows you to have hot water without power consumption.

**TECHNICAL FEATURES:**

- A 25 l hot water tank – The leading environmentally friendly system (sunlight heats the water).
- Polyethylene structure.
- Rain effect and anti-lime shower head
- Hot - cold water mixer tap
- Draining system for winter
- Optional hose connection
- Easy installation through fast water connection

| | Code | Standard Pack | Standard weight in kg | Standard volume in $m^3$ |
|---|---|---|---|---|
| Loire Solar shower black | 74809 | 1 | 7.5 | 0.315 |
| Loire Solar shower dark sand | 74810 | 1 | 7.5 | 0.315 |
| Loire Solar shower olive green | 74811 | 1 | 7.5 | 0.315 |
| Loire Solar shower burgundy | 74812 | 1 | 7.5 | 0.315 |

SHOWERHEAD

MIXER TAP

74809

74810

74811

74812

# Relax model shower tray

**Also available with D.63 anchoring (20067) and without anchoring (20073).**

## DESCRIPTION

Dimensions 80 cm x 90 cm. Large stainless steel shower tray positioned away from the standing area. Non-slip surface. Made of polyester + fibreglass. Gelcoat Finish.

| | Code | Standard Pack | Standard weight in kg | Standard volume in m³ |
|---|---|---|---|---|
| With Ø 43 mm anchoring fixture for Angel showers 52717 and 52718 (page 71). | 20066 | 1 | 9.0 | 0.16 |

# Classic model shower tray

**Also available with D.63 anchoring (19724) and without anchoring (19725).**

## DESCRIPTION

Dimensions 100 cm x 80 cm. Large stainless steel shower tray. Non-slip surface. Made of polyester + fibreglass. Gelcoat Finish.

| | Code | Standard Pack | Standard weight in kg | Standard volume in m³ |
|---|---|---|---|---|
| With Ø 43 mm anchoring fixture for Angel showers 52717 and 52718 (page 71). | 19723 | 1 | 10.0 | 0.16 |

# Shower tray

**Available with D.63 anchoring (code 00104).**

## DESCRIPTION

Dimensions 80 cm x 80 cm, with adjustable main drain. Ø 130 mm grille, Ø 50 mm connection. Made of polyester + fibreglass.

| | Code | Standard Pack | Standard weight in kg | Standard volume in m³ |
|---|---|---|---|---|
| With Ø 43 mm anchoring fixture for Angel showers 52717 and 52718 (page 71). | 00103 | 1 | 11.0 | 0.16 |

# Shower anchoring fixtures

**The new range of timer showers has replaced the showers with code numbers 00095, 00097, 08728, 15841, 19947.**

## DESCRIPTION

Made of plastic, with a locking system for shower disassembly and bonded connection.

| | Code | Standard Pack | Standard weight in kg | Standard volume in m³ |
|---|---|---|---|---|
| Shower anchoring Ø 43 mm<br>For models: 52717 and 52718 | 00107 | 1 | 0.48 | 0.003 |
| Shower anchoring Ø 63 mm<br>For model: 59775 | 27333 | 1 | 1.0 | 0.003 |

# Shower tray for Pluvium shower

## DESCRIPTION

Shower tray for the Pluvium shower made of a combination of wood and glossy AISI-316L stainless steel. Its minimalist and compact design provides an elegant and modern image for the pool environment.

| | Code | Standard Pack | Standard weight in kg | Standard volume in m³ |
|---|---|---|---|---|
| Shower tray for Pluvium shower | 43434 | 1 | 11 | 0.028 |

**NOTE: The water features do not include a pump, control box or suction pipes.**

# Water curtains

- Range of cascades for residential pools made of AISI-316L stainless steel.
- The range is made up of three cascades in an outstanding modern design.
- Polished + matt finish.
- All models come with anchoring. A ½ HP pump is recommended.

## Classic

| | Code | Standard Pack | Standard weight in kg | Standard volume in m³ |
|---|---|---|---|---|
| Classic water curtain | 57095 | 1 | 28 | 0.38 |

## Straight

| | Code | Standard Pack | Standard weight in kg | Standard volume in m³ |
|---|---|---|---|---|
| Straight water curtain | 57096 | 1 | 36 | 0.25 |

## One

| | Code | Standard Pack | Standard weight in kg | Standard volume in m³ |
|---|---|---|---|---|
| One water curtain | 57097 | 1 | 36 | 0.25 |

RECOMMENDED

Victoria Plus Silent pump See P. 251

# A-350 and A-500 residential water curtains

NOTE: The water features do not include a pump, control box or suction pipes.

## DESCRIPTION

- Range of ornamental fountains to enhance pool design.
- Made of AISI-304L and AISI-316L stainless steel.
- Polished finish.
- Fastened to the ground with screws and anchor studs.
- 1½" ext. R. connection.

| | Code | Standard Pack | Standard weight in kg | Standard volume in m³ |
|---|---|---|---|---|
| **Residential water curtain** | | | | |
| A-350 AISI-316L | 65104 | 1 | 10 | - |
| A-500 AISI-316L | 65105 | 1 | 13 | - |
| A-350 AISI-304L | 65106 | 1 | 10 | - |
| A-500 AISI-304L | 65107 | 1 | 13 | - |

# Residential water curtain

NOTE: The water features do not include a pump, control box or suction pipes.

## DESCRIPTION

Residential water curtain in polished stainless steel. Fastened to the ground with screws and anchor studs.

| | Code | Standard Pack | Standard weight in kg | Standard volume in m³ |
|---|---|---|---|---|
| **AISI-316L stainless steel** | | | | |
| A-350, 12 m³/h, 2 mca | 52244 | 1 | 10 | 0.12 |
| A-500, 18 m³/h, 2 mca | 52245 | 1 | 15 | 0.24 |

## TECHNICAL FEATURES

| Code | Suction concrete | Variable speed | Control box | *Optional Push button + Switch |
|---|---|---|---|---|
| 52244 | 00302 x 2 | 65560 | 25719 | 04047 + 04050 |
| 52245 | 00302 x 2 | 65562 | 25719 | 04047 + 04050 |

* Optional: components for turning the waterfall on from the pool.

# Ornamental waterfalls

## DESCRIPTION

In AISI-316L stainless steel.

| | Code | Standard Pack | Standard weight in kg | Standard volume in m³ |
|---|---|---|---|---|
| Width (W) 300 mm. 1½" connection (B) | 05577 | 1 | 6.9 | 0.06 |
| Width (W) 600 mm, 2" connection (B) | 05578 | 1 | 11.9 | 0.09 |

## TECHNICAL FEATURES

| Code water feature | Face plate | Anchoring sockets | | Suction | | Pump | Control box | | |
|---|---|---|---|---|---|---|---|---|---|
| | | Concrete | Liner | Concrete | Liner | | Manual push button | Pneumatic push button | |
| | | | | | | | | Concrete | Liner |
| 05577 | - | - | - | 19987 x 1 | 20091 x 1 | 38770 | 19988 | 07669 | 07868 |
| 05578 | - | - | - | 19987 x 2 | 20091 x 2 | 38776 | 19989 | 17154 | 17155 |

**Note:** The pneumatic push button includes: control box, wall conduits and push button.

# SilkFlow waterfalls

## DESCRIPTION

Waterfall made of corrosion resistant ABS. Can be fed through the return circuit of the pool filter or through a specific pump.

| | Code | Standard Pack | Standard weight in kg | Standard volume in m³ |
|---|---|---|---|---|
| 300 mm waterfall | 45205 | 1 | 1.19 | 0.012 |
| 600 mm waterfall | 45206 | 1 | 2.36 | 0.021 |
| 900 mm waterfall | 45207 | 1 | 3.45 | 0.003 |
| 1200 mm waterfall | 45208 | 1 | 4.62 | 0.004 |

## TECHNICAL FEATURES

| Code | Required water flow l/min | Standard pump size HP | A Length of waterfall | B Width of waterfall over the pool surface, at the recommended rate of l/min/m | C Recommended height for the waterfall | D Distance of the water at the recommended rate of l/min/m |
|---|---|---|---|---|---|---|
| 45205 | 50 | 0.5 | 300 mm | 200 mm | 300 mm | 300 mm |
| 45206 | 100 | 0.5 | 600 mm | 500 mm | 600 mm | 300 mm |
| 45207 | 150 | 0.75 | 900 mm | 800 mm | 900 mm | 300 mm |
| 45208 | 200 | 0.75 | 1200 mm | 1100 mm | 900 mm | 300 mm |

# Pluvium water features

## and ornaments

## DESCRIPTION

The water features in the AstralPool Signature range add a touch of elegance and design to any pool, not to mention their main purpose: increasing swimmers' feeling of wellbeing. We are proud to present the PLUVIUM cannon and waterfall. They combine wood and satin finish AISI 316L stainless steel. These products match others AstralPool Signature Pluvium shower range. 3-year warranty.

| | Code | Standard Pack | Standard weight in kg | Standard volume in m³ |
|---|---|---|---|---|
| Pluvium cannon, 7 m³/h, 5 mca. | 45868 | 1 | 11 | 0.089 |
| Pluvium waterfall, 12 m³/h, 2 mca. | 45869 | 1 | 31 | 0.284 |

**The following fastening systems are recommended:**

| | Code | Standard Pack | Standard weight in kg | Standard volume in m³ |
|---|---|---|---|---|
| Pluvium cannon anchoring | 45872 | 1 | 2 | 0.005 |
| Pluvium waterfall anchoring | 45873 | 1 | 3.5 | 0.015 |

**NOTE: The water features do NOT include anchoring, a pump, control panel or suction system.**

RECOMMENDED

**Pluvium shower** See p.65

# Residential water cannon

52242

52243

## DESCRIPTION

Residential water cannon in polished stainless steel. Fastened to the ground with screws and anchor studs.

| | Code | Standard Pack | Standard weight in kg | Standard volume in $m^3$ |
|---|---|---|---|---|
| **AISI-316L stainless steel** | | | | |
| Round opening. 5 $m^3/h$, 2 mca | 52242 | 1 | 3 | 0.12 |
| Flat opening. 15 $m^3/h$, 2 mca | 52243 | 1 | 5 | 0.13 |
| **AISI-304L stainless steel** | | | | |
| Round opening. 5 $m^3/h$, 2 mca | 52238 | 1 | 3 | 0.12 |
| Flat opening. 15 $m^3/h$, 2 mca | 52239 | 1 | 5 | 0.13 |

**NOTE: The water features do not include a pump, control box or suction pipes.**

## TECHNICAL FEATURES

| Code | Suction concrete | Pump | Control box | *Optional Push button + Switch |
|---|---|---|---|---|
| 52242 | 00302 | 65557 | 25718 | 04047 + 04050 |
| 52243 | 00302 x 2 | 65560 | 25719 | 04047 + 04050 |
| 52238 | 00302 | 65557 | 25718 | 04047 + 04050 |
| 52239 | 00302 x 2 | 65560 | 25719 | 04047 + 04050 |

*Optional: components for turning the cannon on from the pool.

## GENERAL NOTE FOR ALL MODELS

Made of PP stabilized against UV rays. The whole range comes in white. Ask your dealer about other colours.

Made up of tiles in modules for straight and curved sections (outer radius of 1 or 2 m), they click into place (male-female fitting), which gives certain leeway in assembling them, as well as absorbing their potential expansion due to the temperature changes to which they are exposed.

For all models of grating, a channel 5 mm wider than the grating must be built so that it easily fits into place and any potential expansion is prevented.

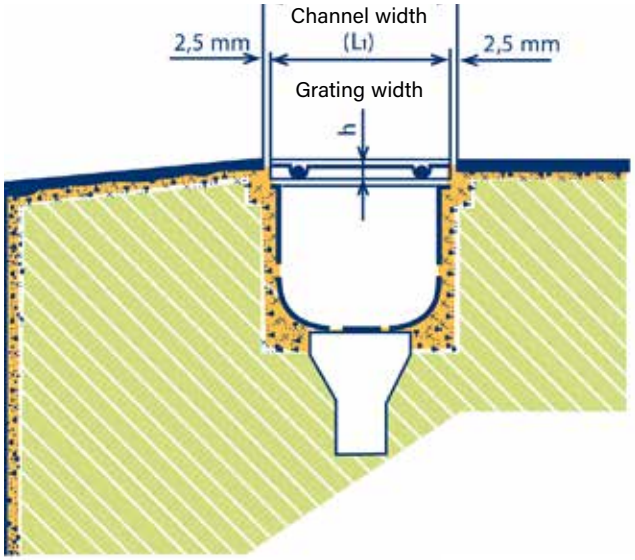


| Channel width | Grating width |
|---|---|
| 200 | 195 |
| 250 | 245 |
| 300 | 295 |
| 350 | 345 |

The height (h) of the grating varies depending on the model.

– Longitudinal model h = 24 mm

– Transversal model h = 22 mm and h = 35 mm

## LONGITUDINAL MODEL

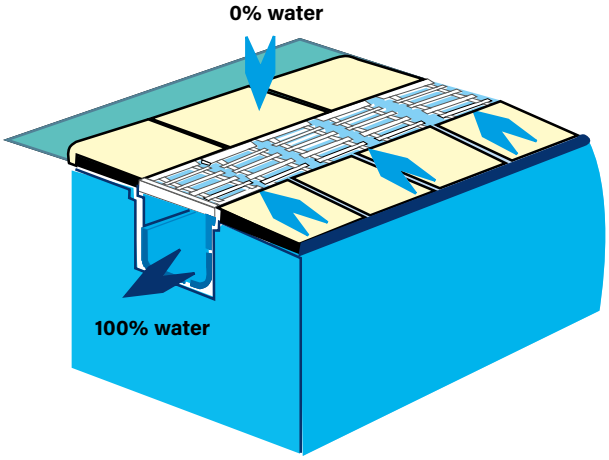


The longitudinal design of this model ensures that any excess water from the pool is not allowed to overflow onto the pool deck, thus maintaining it practically dry.

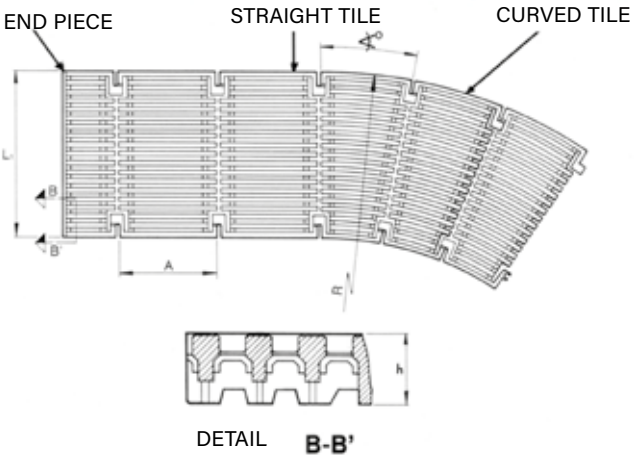


| | Model | L | L1 | h | A | ∢° r.1m. | ∢° r.2m. |
|---|---|---|---|---|---|---|---|
| STRAIGHT TILE | 05581 | 200 | 195 | 24 | 206 | - | - |
| | 05582 | 250 | 245 | 24 | 206 | - | - |
| | 05583 | 300 | 295 | 24 | 206 | - | - |
| | 05584 | 350 | 345 | 24 | 206 | - | - |
| END PIECE | 06420 | 200 | 195 | 24 | - | - | - |
| | 06421 | 250 | 245 | 24 | - | - | - |
| | 06422 | 300 | 295 | 24 | - | - | - |
| | 06423 | 350 | 345 | 24 | - | - | - |
| CURVED TILE | 08001 | 200 | 195 | 24 | - | x | |
| | 08002 | 300 | 295 | 24 | - | x | |
| | 07565 | 250 | 245 | 24 | - | x | |
| | 07566 | 350 | 345 | 24 | - | x | |
| | 05585 | 200 | 195 | 24 | - | | x |
| | 05586 | 250 | 245 | 24 | - | | x |

**Other grating colours can be made to order. For further information, ask your AstralPool dealer.**

# Longitudinal grating tile

## DESCRIPTION

Made of PP stabilized against UV rays. Grating fastened together using male-female hooks (5 units = 1,024 meters). The flexible properties of the grating means a radius of up to 5 m can be covered.

| | Code | Standard Pack | Standard weight in kg | Standard volume in m³ |
|---|---|---|---|---|
| Height 24 mm, width 195 mm | 05581 | 45 | 16.2 | 0.080 |
| Height 24 mm, width 245 mm | 05582 | 29 | 13.4 | 0.080 |
| Height 24 mm, width 291 mm | 05583 | 28 | 15.6 | 0.080 |
| Height 24 mm, width 345 mm | 05584 | 19 | 13.2 | 0.080 |

# Curved grating tile

## DESCRIPTION

Made of PP stabilized against UV rays. Grating fastened together using male-female hooks.

| Height | L | L1 | Radius | Code | Standard Pack | Standard weight in kg | Standard volume in m³ |
|---|---|---|---|---|---|---|---|
| 24 mm | 200 mm | 195 mm | 1 m | 08001 | 60 | 17.2 | 0.079 |
| 24 mm | 300 mm | 295 mm | 1 m | 08002 | 32 | 14.6 | 0.079 |
| 24 mm | 250 mm | 245 mm | 1 m | 07565 | 42 | 17.2 | 0.079 |
| 24 mm | 350 mm | 345 mm | 1 m | 07566 | 24 | 13.4 | 0.079 |
| 24 mm | 200 mm | 195 mm | 2 m | 05585 | 48 | 17.2 | 0.079 |
| 24 mm | 250 mm | 245 mm | 2 m | 05586 | 30 | 14.2 | 0.079 |

# End piece kit for parallel grating

## DESCRIPTION

Made of AISI-304 stainless steel plate, with end piece and longitudinal grating made of PP stabilized against UV rays. Made so that the grating in the end piece can be cut to fit in place.

| | Code | Standard Pack | Standard weight in kg | Standard volume in m³ |
|---|---|---|---|---|
| Height 24 mm, width 195 mm | 16064 | 15 | 5.11 | 0.002 |
| Height 24 mm, width 245 mm | 16065 | 12 | 5.17 | 0.002 |
| Height 24 mm, width 291 mm | 16066 | 8 | 4.21 | 0.002 |
| Height 24 mm, width 345 mm | 16067 | 8 | 5.00 | 0.002 |

# Perimeter grating

## DESCRIPTION

Range of overflow grating for swimming pools. Made of homopolymer polypropylene, with additives for UV protection. Available in 500 mm long modules with male-female hooks for easy and fast assembly.

| | Code | Standard Pack | Standard weight in kg | Standard volume in m³ |
|---|---|---|---|---|
| 0.5 m longitudinal grating<br>Height 22 mm Width 195 mm | 28664 | 20 | 19.9 | 0.080 |

OVERFLOW CHANNEL GRATING

# Modular transversal grating

## for curves

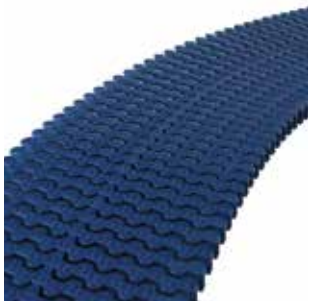

### DESCRIPTION

Made of PP stabilized against UV rays. Assembled by fitting the modules together. Available in 5 colours. Other grating colours can be made to order. For further information, please contact your AstralPool dealer.

| | Code | Standard Pack | Standard weight in kg | Standard volume in m³ |
|---|---|---|---|---|
| **Modular grating for curves** | | | | |
| Height 22 mm, width 195 mm | 34190 | 470 | 14.1 | 0.08 |
| Height 22 mm, width 245 mm | 34191 | 320 | 12.4 | 0.08 |
| Height 22 mm, width 295 mm | 34192 | 300 | 15.0 | 0.08 |
| Height 22 mm, width 335 mm | 34193 | 250 | 15.0 | 0.08 |
| **Reversible modular grating for curves** | | | | |
| Height 35 mm, width 195 mm | 34194 | 450 | 16.0 | 0.08 |
| Height 35 mm, width 245 mm | 34195 | 300 | 13.7 | 0.08 |
| Height 35 mm, width 295 mm | 34196 | 290 | 17.3 | 0.08 |
| Height 35 mm, width 335 mm | 34197 | 250 | 17.4 | 0.08 |

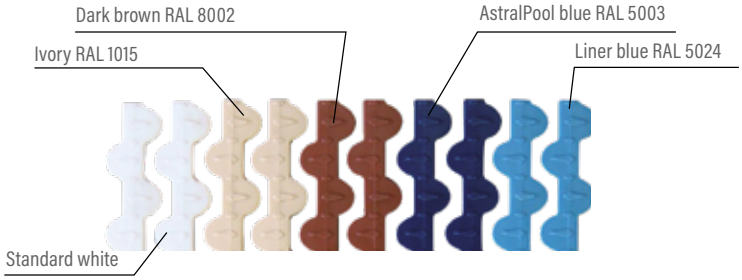


| Colour | Code |
|---|---|
| White | - |
| RAL 1015 | CL90 |
| RAL 8002 | CL109 |
| RAL 5003 | CL60 |
| RAL 5024 | CL 108 |

Note: Colours in the pictures are not exactly the same as in real product.

# Transversal grating for curves

### DESCRIPTION

Modular transversal grating for curves. Made of PP stabilized against UV rays. Assembled by fitting the modules together. Class 3 slip resistance (Rd>45) pursuant to UNE-ENV 12633: 2003.

| | Code | Standard Pack | Standard weight in kg | Standard volume in m³ |
|---|---|---|---|---|
| **Modular grating for curves** | | | | |
| Height 22 mm, width 195 mm | 52535 | 470 | 14.1 | 0.08 |
| Height 22 mm, width 245 mm | 52536 | 320 | 12.4 | 0.08 |
| Height 22 mm, width 295 mm | 52537 | 300 | 15.0 | 0.08 |
| Height 22 mm, width 335 mm | 52538 | 250 | 15.0 | 0.08 |
| **Reversible modular grating for curves** | | | | |
| Height 35 mm, width 195 mm | 52539 | 450 | 16.0 | 0.08 |
| Height 35 mm, width 245 mm | 52540 | 300 | 13.7 | 0.08 |
| Height 35 mm, width 295 mm | 52541 | 290 | 17.3 | 0.08 |
| Height 35 mm, width 335 mm | 52542 | 250 | 17.4 | 0.08 |

**Other grating colours can be made to order. For further information, ask your AstralPool dealer.**

Other grating colours can be made to order. For further information, ask your AstralPool dealer.

OVERFLOW CHANNEL GRATING

# Modular transversal grating

## for curves

### DESCRIPTION

Made of PP stabilized against UV rays. Assembled by fitting the modules together.

| | Code | Standard Pack | Standard weight in kg | Standard volume in m³ |
|---|---|---|---|---|
| **Modular grating for curves** | | | | |
| Height 22 mm, width 195 mm | 11107 | 470 | 15.8 | 0.080 |
| Height 22 mm, width 245 mm | 11108 | 320 | 13.6 | 0.080 |
| Height 22 mm, width 295 mm | 19202 | 300 | 18.0 | 0.080 |
| Height 22 mm, width 335 mm | 19203 | 250 | 17.0 | 0.080 |
| **Reversible modular grating for curves** | | | | |
| Height 35 mm, width 195 mm | 00220 | 450 | 16.5 | 0.080 |
| Height 35 mm, width 245 mm | 00221 | 300 | 14.3 | 0.080 |
| Height 35 mm, width 295 mm | 00222 | 290 | 19.3 | 0.080 |
| Height 35 mm, width 335 mm | 00223 | 250 | 18.1 | 0.080 |

# Modular grating for curves

### DESCRIPTION

Made of PP stabilized against UV rays. Assembled by fitting the modules together. Non-slip surface. Other colours available on request. For further information, please contact your AstralPool dealer. Compliant with standard EN-13451-1 (8 mm). Class 3 slip resistance (Rd>45) pursuant to UNE-ENV 12633: 2003.

| | Code | Standard Pack | Standard weight in kg | Standard volume in m³ |
|---|---|---|---|---|
| **Modular grating for curves** | | | | |
| Height 22 mm, width 195 mm | 28656 | 470 | 20.84 | 0.082 |
| Height 22 mm, width 245 mm | 28657 | 320 | 18.80 | 0.082 |
| Height 22 mm, width 295 mm | 28658* | 300 | 18.80 | 0.082 |
| Height 22 mm, width 335 mm | 28659* | 250 | 20.84 | 0.082 |
| **Reversible modular grating for curves** | | | | |
| Height 35 mm, width 195 mm | 28660 | 450 | 26.90 | 0.082 |
| Height 35 mm, width 245 mm | 28661 | 300 | 24.70 | 0.082 |
| Height 35 mm, width 295 mm | 28662* | 290 | 26.61 | 0.082 |
| Height 35 mm, width 335 mm | 28663* | 250 | 22.25 | 0.082 |

* In testing process.

# Transversal grating

### DESCRIPTION

Made of PP stabilized against UV rays. Fastened together by a pass-through cable (49 units per metre).

| | Code | Standard Pack | Standard weight in kg | Standard volume in m³ |
|---|---|---|---|---|
| Height 22 mm, width 195 mm | 00212 | 340 | 11.9 | 0.039 |
| Height 22 mm, width 245 mm | 00213 | 305 | 13.2 | 0.039 |

OVERFLOW CHANNEL GRATING

# Transversal grating tile

Other grating colours can be made to order. For further information, ask your AstralPool dealer.

## DESCRIPTION

Made of PP stabilized against UV rays. Tiles fitted together using a snap fastening system (5 units = 0.975 m).

| | Code | Standard Pack | Standard weight in kg | Standard volume in m³ |
|---|---|---|---|---|
| Height 22 mm, width 245 mm | 00217 | 52 | 22.8 | 0.080 |
| Height 22 mm, width 295 mm | 00218 | 45 | 23.1 | 0.080 |
| Height 22 mm, width 335 mm | 00219 | 38 | 22.0 | 0.080 |

# 90° corner tiles for overflow channels

Other grating colours can be made to order. For further information, ask your AstralPool dealer.

## DESCRIPTION

Made of white, injection moulded copolymer polypropylene.

| | Code | Standard Pack | Standard weight in kg | Standard volume in m³ |
|---|---|---|---|---|
| **Height 22 mm** | | | | |
| Channel width 195 mm | 22379 | 4 | 2.8 | 0.006 |
| Channel width 245 mm | 22380 | 4 | 3.6 | 0.009 |
| Channel width 295 mm | 22381 | 4 | 4.8 | 0.012 |
| Channel width 335 mm | 22382 | 4 | 5.7 | 0.016 |
| **Height 35 mm** | | | | |
| Channel width 195 mm | 22383 | 4 | 3.2 | 0.009 |
| Channel width 245 mm | 22384 | 4 | 4.1 | 0.014 |
| Channel width 295 mm | 22385 | 4 | 5.3 | 0.012 |
| Channel width 335 mm | 22386 | 4 | 6.2 | 0.023 |

OVERFLOW CHANNEL GRATING

# Stainless steel longitudinal grating

Complies with Standard EN 13451-1-3

Complies with Standards EN 16582-1 EN 16713-2

## DESCRIPTION

Longitudinal grating made of stainless steel. A channel 5 mm wider than the grating must be dug so that it is easy to fit.

It is made up of straight sections of AISI-316L stainless steel, 500 mm in length. Straight sections can be made to measure in order to fit the length of any pool.

There are 4 different models depending on the grating used. Height 35 mm.

| | Code | Standard Pack | Standard weight in kg | Standard volume in m³ |
|---|---|---|---|---|
| **Stainless steel longitudinal grating** | | | | |
| 195 mm | 32415 | - | - | - |
| 245 m | 32416 | - | - | - |
| 295 mm | 32417 | - | - | - |
| 345 mm | 32418 | - | - | - |

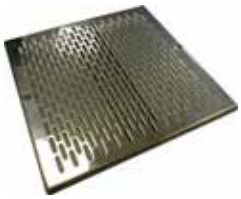

70956

70957

# Stainless steel reinforced grating

Complies with Standard EN 1345-1:2000

## DESCRIPTION

AISI-316L stainless steel grating, compliant with standard EN: 1345-1:2000. Resistant to salt water. Intended for use in both residential and public pools.

| | Code | Standard Pack | Standard weight in kg | Standard volume in m³ |
|---|---|---|---|---|
| Reinforced 252 x 252 mm grating | 70956 | 1 | - | - |
| Reinforced 410 x 410 mm grating | 70957 | 1 | - | - |

# Stainless steel plastic coated cable

## DESCRIPTION

Ø 2.5 mm for fastening modules together.

| | Code | Standard Pack | Standard weight in kg | Standard volume in m³ |
|---|---|---|---|---|
| Stainless steel plastic coated cable | 00214 | 1000 m | 21.0 | 0.036 |

# AISI-316L stainless steel

## plastic coated cable

## DESCRIPTION

Ø 2.5 mm for fastening modules together.

| | Code | Standard Pack | Standard weight in kg | Standard volume in m³ |
|---|---|---|---|---|
| AISI-316L stainless steel plastic coated cable | 00215 | 1000 m | 21.0 | 0.036 |

# Cable locking pins

## DESCRIPTION

Made of brass.

| | Code | Standard Pack | Standard weight in kg | Standard volume in m³ |
|---|---|---|---|---|
| Cable locking pins | 00216 | 100 | 1.5 | 0.001 |

# Grating support profile

## DESCRIPTION

Suitable for grating heights of 22, 24 and 35 mm. Made of weather resistant plastic. Supplied in 2 m strips.

Inside measurements: 24 mm x 37 mm.

Available in other colours. For further information, ask your dealer.

| | Code | Standard Pack | Standard weight in kg | Standard volume in m³ |
|---|---|---|---|---|
| Grating support profile | 00224 | 25 | 13.2 | 0.033 |

# POWERFALL WATER BLADES

## A water feature with soothing qualities

Water features and massage jets are now valued for both their relaxing and their aesthetic qualities. Compatible with all types of pool, **PowerFall water falls enhance the swimming pool and provide calm and well-being.**

### > A TOP-OF-THE-RANGE TOUCH TO CUSTOMISE THE POOL

- The Zodiac® PowerFall water fall is available in 4 widths to customise the pool, based on the size of the pool.
- **Simple to install when constructing the pool,** the water fall draws its supply directly from the return circuit from the filtration system and creates **a harmonious and soothing sound.**

**DID YOU KNOW?**
As the first water fall 100% made of ABS plastic, Zodiac® PowerFall stands out for its high quality and unalterable manufacturing (corrosion free). Thanks to its patented X-Baffle® internal structure (item #2), the water fall is always constant and homogeneous whatever water flow is. PowerFall lip is made of translucent plastic (item # 1).Thus, they harmonize perfectly with the design of the pool whatever the color of the pool surface.

X-Baffle® system

CANNONS & WATERFALLS

# PowerFall

+ Durable: 100% ABS plastic
+ X-Baffle system: consistent water flow
+ Aesthetic and qualitative improvement for pools

3 YEAR WARRANTY

ALL TYPES OF POOLS

EASY INTALLATION

## OPTIONAL ACCESSORIES

| PVC Adapter M/F 1.5"/50mm | PVC Adapter F/F 1.5"/1.5" |
|---|---|
| W8620110 | W8620111 |

## PRODUCT REFERENCES

| PowerFall | 1' (30 cm) | 18' (46 cm) | 2' (61 cm) | 3' (91 cm) |
|---|---|---|---|---|
| Standard Model | WB000011 | WB000008 | WB000009 | WB000010 |

## OPTIMAL WATER FLOW FOR EACH ZODIAC® WATER FALL*

| PowerFall | 1' (30 cm) | 18' (46 cm) | 2' (61 cm) | 3' (91 cm) |
|---|---|---|---|---|
| Projection at 15 cm from the wall | 5.5 $m^3/h$ | | | |
| Projection at 30 cm from the wall | 7.0 $m^3/h$ | | | |
| Projection at 45 cm from the wall | 11.5 $m^3/h$ | | | |
| Projection at 60 cm from the wall | 15.0 $m^3/h$ | | | |

* Required flow rate for the water fall projection from the pool wall at 1 m height.

## PIPE SIZE MUST BE CORRECTLY CHOSEN ACCORDING TO FLOW RATE

| PowerFall | 1' (30 cm) | 18' (46 cm) | 2' (61 cm) | 3' (91 cm) |
|---|---|---|---|---|
| < 16 $m^3$ / hour | 50 mm | | | |
| ≥ 16 $m^3$ / hour | 63 mm | | | |

## POWER / FLOW EQUIVALENCES REMINDER

| PowerFall | 1' (30 cm) | 18' (46 cm) | 2' (61 cm) | 3' (91 cm) |
|---|---|---|---|---|
| 3/4 CV | 13 $m^3/h$ | | | |
| 1 CV | 16 $m^3/h$ | | | |
| 1,5 CV | 22 $m^3/h$ | | | |
| 2 CV | 30 $m^3/h$ | | | |

## INSTALLATION

Important: the water fall must not be installed at more than 1.2 m from the water level.

- 1 - Place a separate valve on each cascade. If the cascades are the same size and installed at the same height, construct a loop to balance water flow to all units.
- 2 - Prepare the notch where the water fall will be installed: For PowerFall cascades, make a notch in the bond beam about 11 cm deep and 2.5 cm longer than the cascade.
- 3 - Water fall placement: Create a bed of mortar in the notch to reinforce the base. Place the water fall in the mortar and ensure it is level.

1

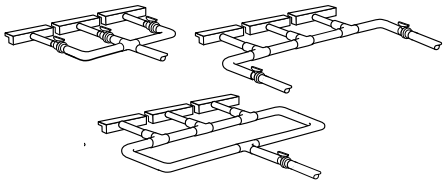

2

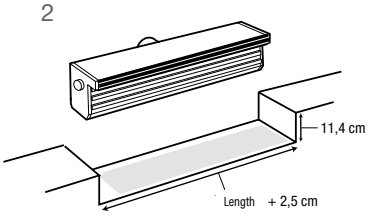


3

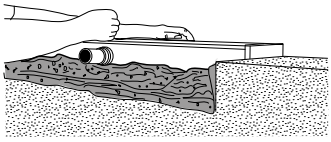

# POOL SHELL EQUIPMENT




**95 POOL SHELL MATERIAL COLOR RANGE**

**96 ABS SKIMMERS**
- 96 UNIK skimmer 25L
- 98 NORM skimmer 17.5L
- 99 17.5 L skimmers
- 105 Filtering skimmers
- 106 15 L skimmers
- 109 Floating skimmer
- 110 ABS Skimmer accessories

**113 STAINLESS STEEL SKIMMERS**
- 113 SLIM skimmer
- 114 A-100, A-201, A-202 and A-400 skimmers
- 117 Stainless steel skimmers accessories

**118 LEVEL REGULATORS**

**120 ABS MAIN DRAINS**
- 120 NORM main drains
- 121 Standard main drains

**125 STAINLESS STEEL MAIN DRAINS**
- 125 STYLE main drains
- 126 Standard stainless steel main drains

**129 MAIN DRAIN ACCESSORIES**

**130 ABS NOZZLES**
- 130 NORM return inlet nozzles
- 131 Multiflow return inlet nozzles
- 134 Return inlet nozzles
- 135 Pool floor nozzles
- 137 Nozzles for high flow rates
- 138 Suction nozzles
- 141 Adjustable nozzles
- 141 Lateral nozzles
- 142 Hydromassage kits
- 143 Accessories for ABS nozzles

**144 STAINLESS STEEL NOZZLES**
- 144 STYLE nozzles
- 146 Return inlet nozzles
- 147 Brushing return inlet nozzle
- 148 Adjustable nozzles
- 149 Suction nozzles
- 149 Stainless Steel nozzles accessories

**150 CONNECTION BOXES**

**151 INTERCHANGEABLE POOL BASIN EQUIPMENTS**

**152 WALL BUSHINGS**
- 152 ABS wall bushings
- 153 PVC wall bushings
- 153 Stainless Steel wall bushings

**154 EQUIPMENT PACKS**

**155 WINTER ACCESSORIES**

**156 INSTALLATION DIAGRAMS**

# UNIK PRODUCTS

## DESIGNED PERFECTLY. INTEGRATED EVENLY.

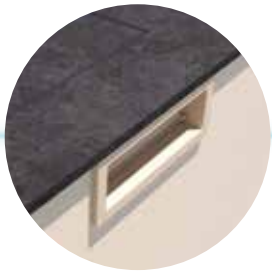

**FULLY INTEGRATED**

**IMPROVED PERFORMANCE**

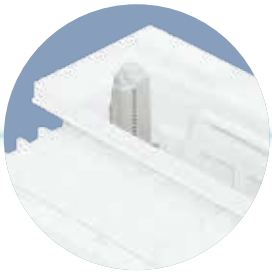

**EASY TO USE AND MAINTAIN**

AstralPool has developed a new concept for the Pool Basin products under the UNIK name. It offers a better integration with the swimming pool and surroundings (products almost invisible), a better performance in all the functionalities and an exclusive design.

ASTRALPOOL®

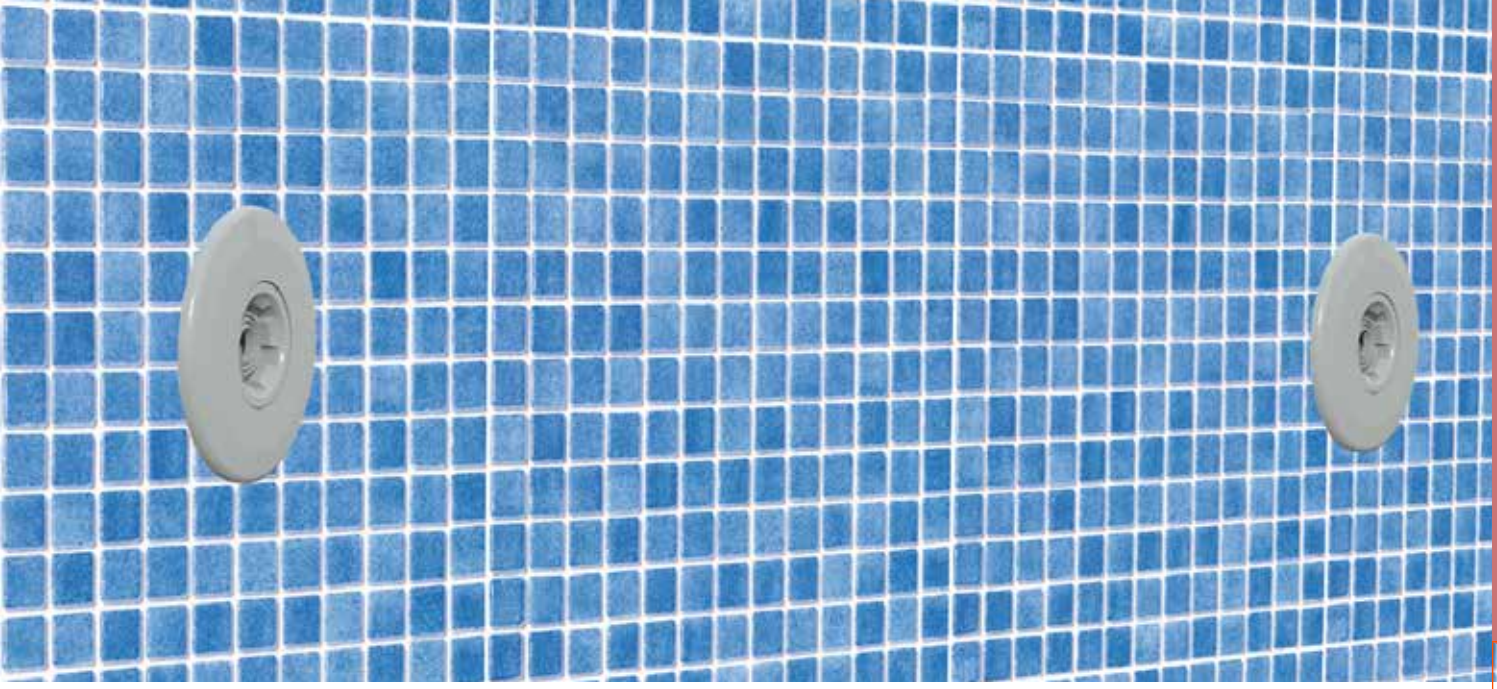

# NEW RANGE OF INLETS

## SPECIALLY DESIGNED FOR RENOVATION, ALSO SUITABLE FOR NEW POOLS

INSTALLATION IN D50 PIPE (GLUING INSIDE PIPE)

MULTIFLOW BALL

DIFFERENT COLORS

No need to do a big hole in the pool wall, thanks of its installation method:
Time saving (less work)
Risk reducing (pipe breaking)

ASTRALPOOL®

# EASYCOLOR

## CHOOSE YOUR COLORS CUSTOMIZE YOUR SKIMMER

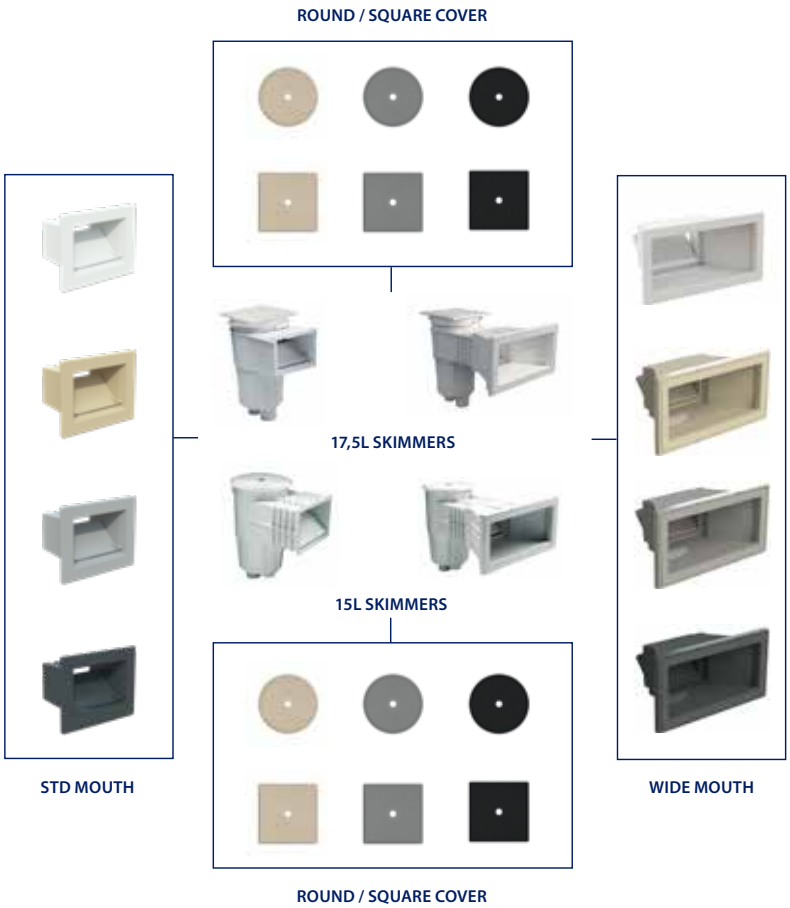


Change the color of your skimmer with the range of **covers and mouths EasyColor**, easily to install.

It is a good option to change the color, renew the appearance or to change an old and used part for an already installed skimmer, in order to have a new appearance.

AstralPool is completing the range of EasyColor, **launching mouths for STD skimmers**.

Always with the standard AstralPool colors: beige, light grey and anthracite grey.

ASTRALPOOL

POOL SHELL MATERIAL COLOR RANGE

# Color range

## Summary of the standard pool fits that exist in color version: Beige, Light Grey, Anthracite grey

| Family | | Descriptions | Concrete pool | Colors | Page | Liner and Prefabricated pool | Colors | Page |
|---|---|---|---|---|---|---|---|---|
| Skimmer | 15L | Skimmer 15L STD - opening | 00249CLXXX | | 106 | | | |
| | | Skimmer 15L - with wide mouth opening | 00251CLXXX | | 107 | 34413CLXXX | | 108 |
| | 17.5L | Skimmer Norm - with inserts | | | | 56176CLXXX | | 98 |
| | | Skimmer Norm - without inserts | 58707CLXXX | | 98 | 56299CLXXX | | 98 |
| | | Skimmer 17.5L - with standard mouth opening, 6° for polyester pool, round cover | | | | 68108CLXXX | | 102 |
| | | Skimmer 17.5L with wide mouth opening | | | | 11311CLXXX | | 102 |
| | | Skimmer 17.5L - with wide mouth opening for parker model | | | | 11317CLXXX | | 103 |
| | 25L | Skimmer Unik | Several codes | | 97 | Several codes | | 97 |
| | | | | | | | | |
| Main drain | | Norm main drain | 56378CLXXX | | 120 | 56380CLXXX | | 120 |
| | | Norm main drain - Antivortex grating | 56379CLXXX | | 120 | 56382CLXXX | | 120 |
| | | Norm main drain - without inserts | | | | 56381CLXXX | | 120 |
| | | Norm main drain - ithout inserts Antivortex grating | | | | 56383CLXXX | | 120 |
| | | Round main drain 2" oulet | | | | 00271CLXXX | | 121 |
| | | Round main drain 2" oulet - without inserts | 01467CLXXX | | 121 | 06474CLXXX | | 121 |
| Nozzles | Impulsion | Multiflow return inlet | 00295CLXXX | | 131 | 00330CLXXX | | 132 |
| | | Multiflow return inlet | 00298CLXXX | | 132 | 00334CLXXX | | 132 |
| | | Multiflow return inlet | | | | 17383CLXXX | | 132 |
| | | Multiflow return inlet | 76493CLXXX | | 132 | 76494CLXXX | | 132 |
| | | Norm return inlet | | | | 56499CLXXX | | 130 |
| | | Norm return inlet | | | | 56500CLXXX | | 130 |
| | Suction | Suction nozzle | 00300CLXXX | | 138 | 17382CLXXX | | 140 |
| | | Suction nozzle 2" | | | | 00332CLXXX | | 139 |
| | | | | | | 00336CLXXX | | 140 |
| | | Lateral nozzle polyester pool | | | | 74121CLXXX | | 140 |
| | Pool Floor | Pool floor return inlet | 00303CLXXX | | 135 | 00340CLXXX | | 135 |
| | | Pool floor return inlet | | | | 76500CLXXX | | 135 |
| | | Pool floor return inlet with swivel joint | 22353CLXXX | | 136 | | | 136 |
| | Lateral nozzle | Lateral nozzle polyester pool | | | | 74121CLXXX | | 140 |
| Net & clean | | Nozzles | 65234CLXXX* | | | | | 420 |
| Connection boxes | | UNIK connection box | 75971CLXXX | | 150 | 75971CLXXX | | 150 |
| | | Connection box | 75972CLXXX | | 150 | 75972CLXXX | | 150 |

* Only for concrete and prefabricated pools.

XXXXXCL090 Beige  XXXXCL129 Light Grey  XXXXXCL144 Anthracite Grey

ABS SKIMMERS

# Skimmer Unik

Complies with Standards
EN 16582-1
EN 16713-2

DESIGNED PERFECTLY. INTEGRATED EVENLY

+ Fully integrated.
+ Quiet operation.
+ Easy maintenance.

## SELECTION TABLE

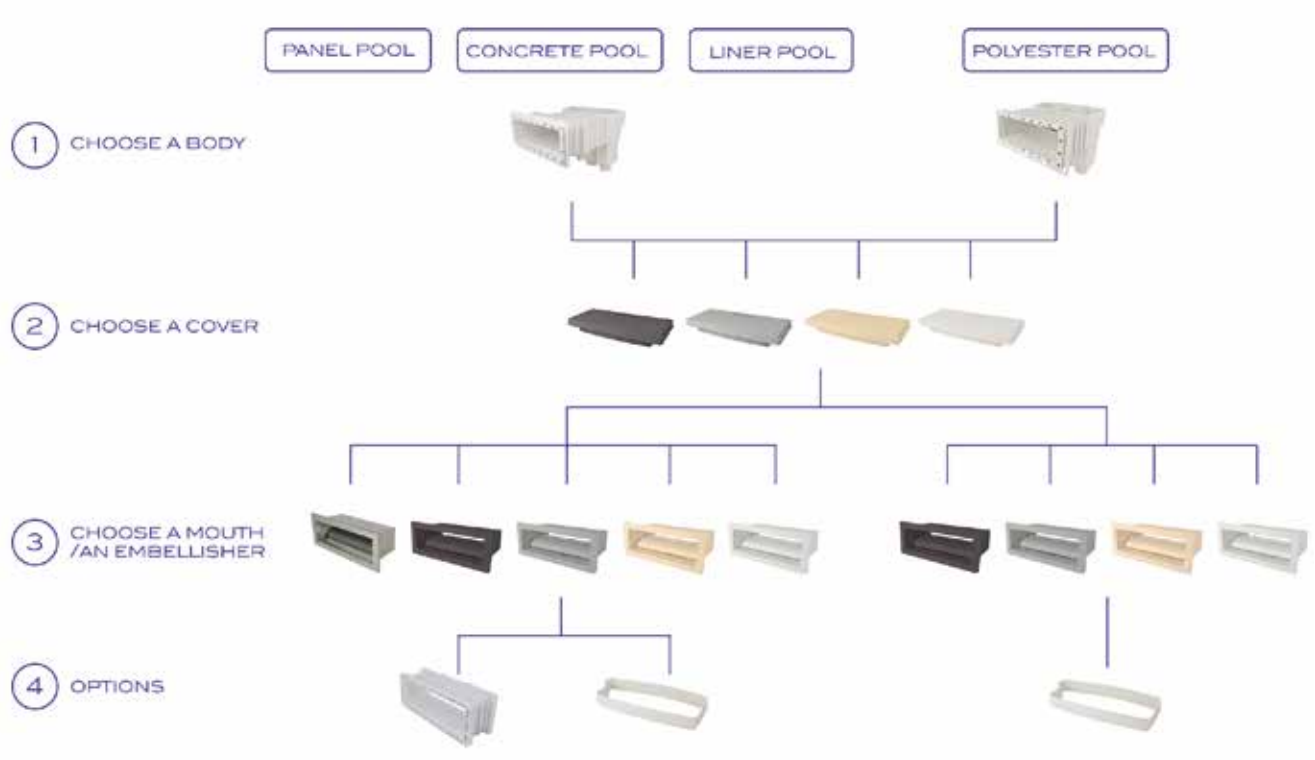


## INSTALLATION

How to install skimmer mouth?

How to integrate cover in the pool surround material?

How to glue panels version?

## DIMENSIONS OF THE KITS

74457 - 74458 - 74459 - 74460

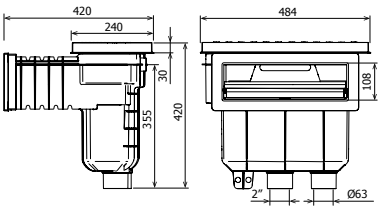


74461 - 74462

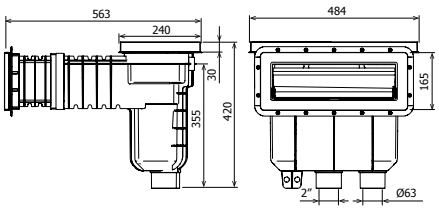


74463 - 74464

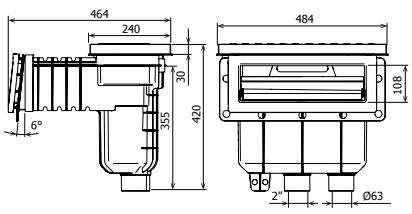

Complies with Standards
EN 16582-1
EN 16713-2

ABS SKIMMERS

# Skimmer Unik

## components to install a Skimmer Unik

**The skimmer Unik is a solution that allows maximum flexibility in terms of colors of the visible parts.**
**Choose amongst the components according to your requirements.**



### 1 Skimmer body - ABS white color

| | Code |
|---|---|
| Skimmer body CONCRETE POOL WITHOUT INSERTS | 74830 |
| Skimmer body CONCRETE POOL WITH INSERTS | 74831 |
| Skimmer body LINER POOL WITHOUT INSERTS* | 74832 |
| Skimmer body LINER POOL WITH INSERTS* | 74833 |
| Skimmer body PANEL POOL WITHOUT INSERTS | 74834 |
| Skimmer body PANEL POOL WITH INSERTS | 74835 |
| Skimmer body POLYESTER POOL 6° WITHOUT INSERTS | 74836 |
| Skimmer body POLYESTER POOL 6° WITH INSERTS | 74837 |

* Delivered with 2 sets of screws DIN 7982 A4 5.5x25 and 32

### 2 Skimmer covers - ABS

| | Code |
|---|---|
| Skimmer cover WHITE | 74838 |
| Skimmer cover BEIGE | 74838CL090 |
| Skimmer cover GREY | 74838CL129 |
| Skimmer cover ANTHRACITE | 74838CL144 |

### 3 Skimmer mouth / embellisher

**3.1 - FOR CONCRETE LINER AND PANEL POOLS**

| | Code |
|---|---|
| Standard ABS WHITE | 74839 |
| Standard ABS BEIGE | 74839CL090 |
| Standard ABS GREY | 74839CL129 |
| Standard ABS ANTHRACITE | 74839CL144 |
| Standard STAINLESS STEEL A316-L | 74806 |

**3.2 - FOR POLYESTER POOLS**

| | Code |
|---|---|
| 6° Mouth - WHITE | 74840 |
| 6° Mouth - BEIGE | 74840CL090 |
| 6° Mouth - GREY | 74840CL129 |
| 6° Mouth - ANTHRACITE | 74840CL144 |

### Kit Skimmer UNIK ABS color white: Body + Cover + Embellisher

| | Code |
|---|---|
| Skimmer UNIK CONCRETE POOL WITHOUT INSERTS | 74457 |
| Skimmer UNIK CONCRETE POOL WITH INSERTS | 74458 |
| Skimmer UNIK LINER POOL WITHOUT INSERTS | 74459 |
| Skimmer UNIK LINER POOL WITH INSERTS | 74460 |
| Skimmer UNIK PANEL POOL WITHOUT INSERTS | 74461 |
| Skimmer UNIK PANEL POOL WITH INSERTS | 74462 |
| Skimmer UNIK POLYESTER POOL 6° WITHOUT INSERTS | 74463 |
| Skimmer UNIK POLYESTER POOL 6° WITH INSERTS | 74464 |

### Skimmer Options - valid for the skimmers parts sold separatlely or the full sets

| | Code |
|---|---|
| EXTENDED Mouth Standard WITHOUT INSERTS | 74841 |
| EXTENDED Mouth Standard WITH INSERTS | 74842 |
| EXTENDED Mouth POLYESTER POOL 6° WITHOUT INSERTS | 74843 |
| EXTENDED Mouth POLYESTER POOL 6° WITH INSERTS | 74844 |
| COVER EXTENSION RING | 74845 |
| DOUBLE GASKET KIT - INSERTS FOR UNIK OPENINGS | 74846-0500 |
| DOUBLE GASKET KIT - SELF-TAPPING SCREWS FOR UNIK OPENINGS | 74846-0600 |

UNIK Level sensor - Page 118

ABS SKIMMERS

# NORM skimmer

## DESCRIPTION

17L skimmer range suitable for installation in public and private pools. Manufactured in ABS with UV treatment, it comes with a weir flap, flow regulator, lid height adjustment and basket. The water inlet is 495 x 80 mm. Recommended flow rate of 7.5 m³/h. Install one skimmer every 25 m² of water line surface area. Connections under 1 ½" and 2", water overflow connection of Ø 40 mm.

## FOR CONCRETE POOLS

| | Code | Standard Pack | Standard weight in kg | Standard volume in m³ |
|---|---|---|---|---|
| **NORM skimmer with square cover** | | | | |
| White | 58707 | 1 | 5.61 | 0.182 |
| Beige | 58707CL090 | 1 | 5.61 | 0.182 |
| Light grey | 58707CL129 | 1 | 5.61 | 0.182 |
| Anthracite grey | 58707CL144 | 1 | 5.61 | 0.182 |

## FOR LINER POOLS

| | Code | Standard Pack | Standard weight in kg | Standard volume in m³ |
|---|---|---|---|---|
| **For liner pools with inserts with square cover** | | | | |
| White | 56176 | 1 | 5.61 | 0.182 |
| Beige | 56176CL090 | 1 | 5.61 | 0.182 |
| Light Grey | 56176CL129 | 1 | 5.61 | 0.182 |
| Anthracite Grey | 56176CL144 | 1 | 5.61 | 0.182 |
| **For liner pools without inserts with square cover** | | | | |
| White | 56299 | 1 | 5.61 | 0.182 |
| Beige | 56299CL090 | 1 | 5.61 | 0.182 |
| Light Grey | 56299CL129 | 1 | 5.61 | 0.182 |
| Anthracite Grey | 56299CL144 | 1 | 5.61 | 0.182 |

Complies with Standards
EN 16582-1
EN 16713-2

## FOR POLYESTER POOLS

| | Code | Standard Pack | Standard weight in kg | Standard volume in m³ |
|---|---|---|---|---|
| NORM 6° for polyester pools with inserts with square cover | 57114 | 1 | 5.61 | 0.182 |

Complies with Standards
EN 16582-1
EN 16713-2

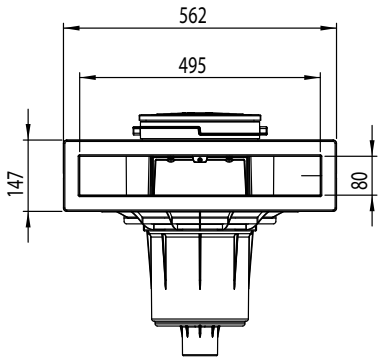


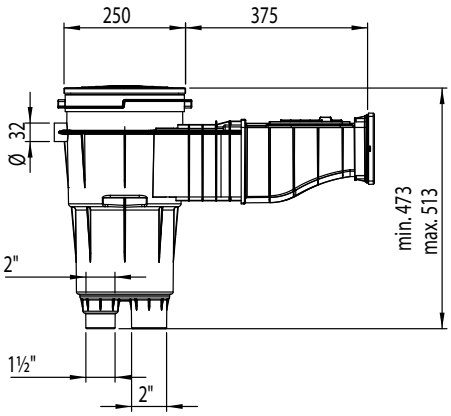

# 17.5 L skimmers

- All of the components that are exposed in this range of skimmers come with a UV treatment. Made of ABS, they come with a weir flap and a flow regulator check valve. Bottom suction nozzle connection: 1½" inner thread.
- Simultaneous connection to the main drain: 2" inner thread. Overflow connection: Ø 32 mm. Round cover with spring clip fastening system.
- The height of the cover can be adjusted and turned through an extended throat, so that it sits perfectly flush with the coping stone.
- Leaf trap secured to base by means of a bayonet mount. In-built weir flap housing. Recommended flow rate: 7.5 m³/h.
- It is recommended that one skimmer be installed for every 25 m² of water surface area.

## Skimmer with standard mouth opening

FOR CONCRETE POOLS

| | Code | Standard Pack | Standard weight in kg | Standard volume in m³ |
|---|---|---|---|---|
| With square cover | 11306 | 1 | 4.20 | 0.062 |

Complies with Standards
EN 16582-1
EN 16713-2

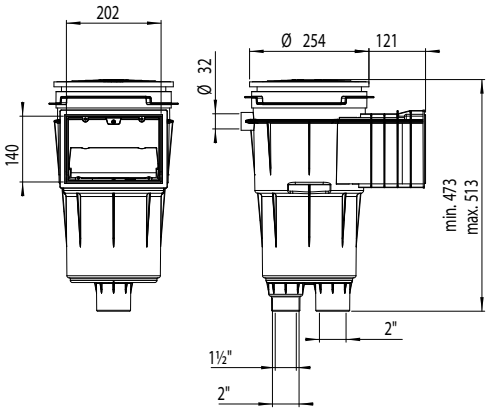

## Skimmer with standard opening and face plate

FOR CONCRETE POOLS

| | Code | Standard Pack | Standard weight in kg | Standard volume in m³ |
|---|---|---|---|---|
| With square cover | 11302 | 1 | 5.20 | 0.062 |

Complies with Standards
EN 16582-1
EN 16713-2

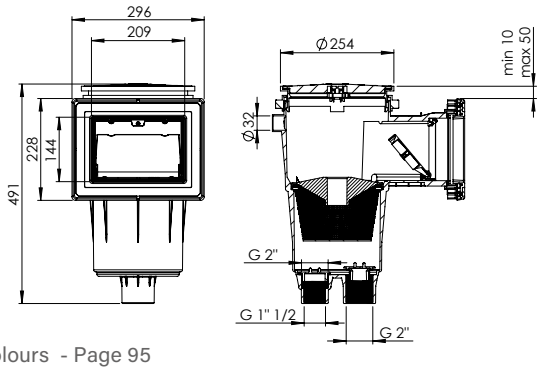


Mouths and covers in different colours - Page 95

# 17.5 L skimmers

## Skimmer

### with standard opening and extended throat

FOR CONCRETE POOLS

| | Code | Standard Pack | Standard weight in kg | Standard volume in m³ |
|---|---|---|---|---|
| With square cover | 11307 | 1 | 5.90 | 0.077 |

Complies with Standards
EN 16582-1
EN 16713-2

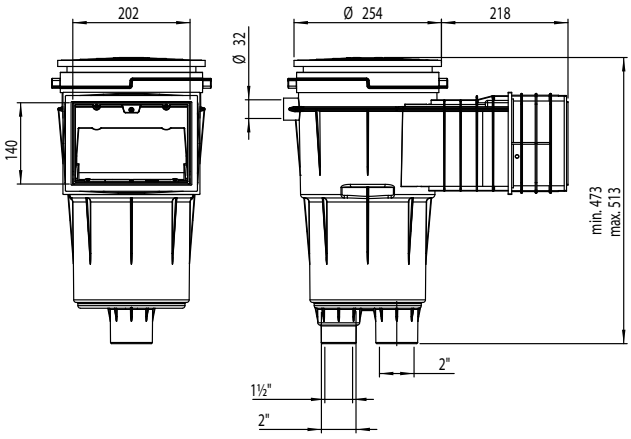

## Skimmer

### with standard opening, extended throat and face plate

FOR CONCRETE POOLS

| | Code | Standard Pack | Standard weight in kg | Standard volume in m³ |
|---|---|---|---|---|
| With square cover | 11303 | 1 | 5.75 | 0.060 |

Complies with Standards
EN 16582-1
EN 16713-2

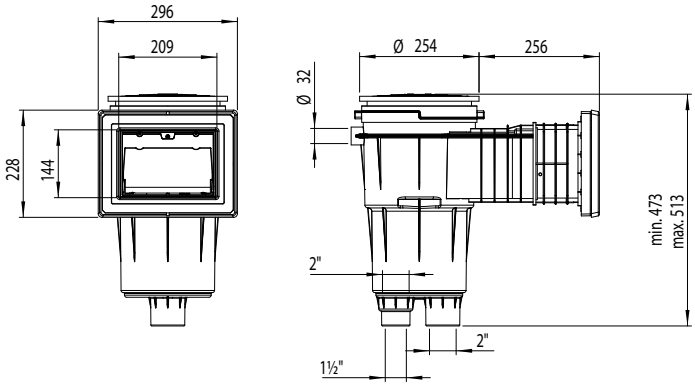

# 17.5 L skimmers

## Skimmer with wide mouth opening

### FOR CONCRETE POOLS

| | Code | Standard Pack | Standard weight in kg | Standard volume in m³ |
|---|---|---|---|---|
| With square cover | 11304 | 1 | 6.24 | 0.135 |

Complies with Standards
EN 16582-1
EN 16713-2

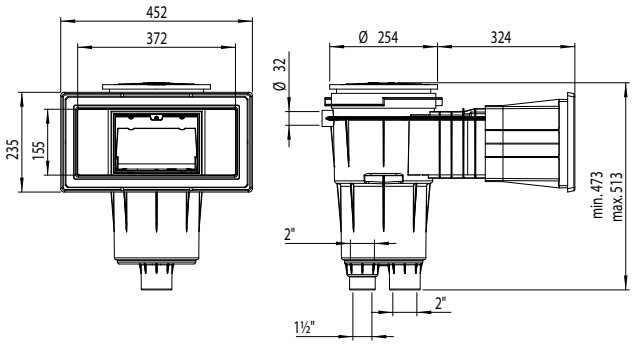

## Skimmer with extended throat and wide opening

### FOR CONCRETE POOLS

| | Code | Standard Pack | Standard weight in kg | Standard volume in m³ |
|---|---|---|---|---|
| With square cover | 11305 | 1 | 6.90 | 0.161 |

Complies with Standards
EN 16582-1
EN 16713-2

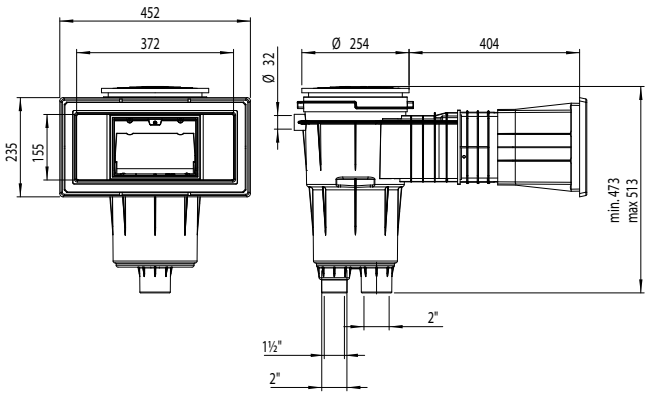


Mouths and covers in different colours - Page 95

# 17.5 L skimmers

Complies with Standards
EN 16582-1
EN 16713-2

## Skimmer with standard mouth opening

### FOR LINER POOLS

Supplied with adhesive gaskets, flange and screws.

| | Code | Standard Pack | Standard weight in kg | Standard volume in m³ |
|---|---|---|---|---|
| **Skimmer with square cover** | | | | |
| White | 11309 | 1 | 5.30 | 0.062 |

### FOR POLYESTER POOLS

| | Code | Standard Pack | Standard weight in kg | Standard volume in m³ |
|---|---|---|---|---|
| **Skimmer 6° for polyester pool with square cover, with inserts** | | | | |
| White | 35664 | 1 | 6.00 | 0.062 |
| **Skimmer 6° for polyester pool with round cover, without inserts** | | | | |
| White | 68108 | 1 | 6.00 | 0.062 |
| Beige | 68108CL090 | 1 | 6.00 | 0.062 |
| Light grey | 68108CL129 | 1 | 6.00 | 0.062 |
| Anthracite grey | 68108CL144 | 1 | 6.00 | 0.062 |

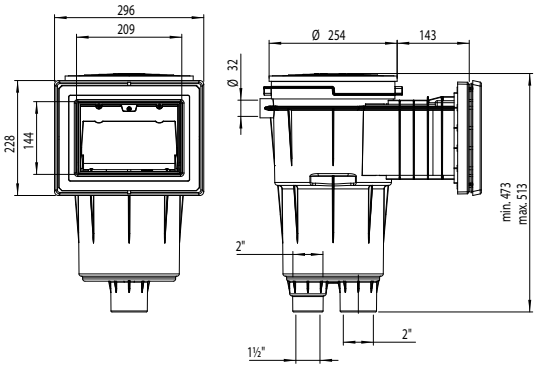

Complies with Standards
EN 16582-1
EN 16713-2

## Skimmer with standard opening and extended throat

### FOR LINER POOLS

Supplied with adhesive gaskets, flange and screws.

| | Code | Standard Pack | Standard weight in kg | Standard volume in m³ |
|---|---|---|---|---|
| **With square cover** | | | | |
| White | 11310 | 1 | 5.90 | 0.077 |

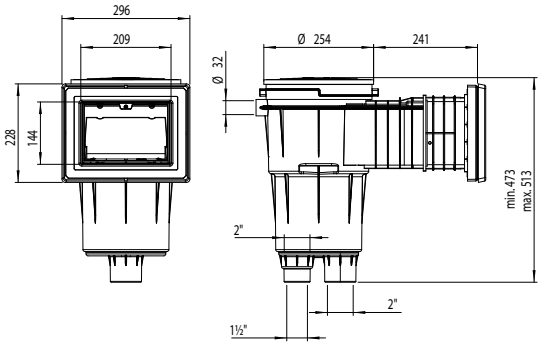


Mouths and covers in different colours - Page 95

# 17.5 L skimmers

11311CL090

11311CL129

11311CL144

Complies with Standards
EN 16582-1
EN 16713-2

## Skimmer with wide mouth opening

### FOR LINER POOLS

Supplied with adhesive gaskets, flange and screws.

| | Code | Standard Pack | Standard weight in kg | Standard volume in m³ |
|---|---|---|---|---|
| **With square cover with inserts** | | | | |
| White | 11311 | 1 | 6.52 | 0.135 |
| Beige | 11311CL090 | 1 | 6.52 | 0.135 |
| Light Grey | 11311CL129 | 1 | 6.52 | 0.135 |
| Anthracite Grey | 11311CL144 | 1 | 6.52 | 0.135 |
| **With square cover without inserts** | | | | |
| White | 11317 | 1 | 6.52 | 0.135 |
| Beige | 11317CL090 | 1 | 6.52 | 0.135 |
| Light Grey | 11317CL129 | 1 | 6.52 | 0.135 |
| Anthracite Grey | 11317CL144 | 1 | 6.52 | 0.135 |

### FOR POLYESTER POOLS

| | Code | Standard Pack | Standard weight in kg | Standard volume in m³ |
|---|---|---|---|---|
| **With square cover - 6° for polyester pool** | | | | |
| White | 35665 | 1 | 6.12 | 0.135 |

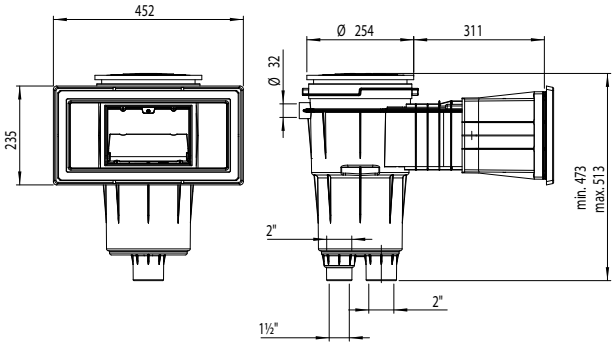


Mouths and covers in different colours - Page 95

# 17.5 L skimmers

## Skimmer with wide opening and extended throat

### FOR LINER POOLS

Supplied with adhesive gaskets, flange and screws.

| | Code | Standard Pack | Standard weight in kg | Standard volume in m³ |
|---|---|---|---|---|
| Square cover | 11313 | 1 | 7.00 | 0.161 |

Complies with Standards
EN 16582-1
EN 16713-2

## Skimmer SPS 250

### FOR PANELS POOLS

17.5 l skimmer with a length (250 mm) suitable for installation in pools made of expanded polystyrene blocks. In addition, thanks to its configuration, it brings the water level up to the edge of the finish. Manufactured in white ABS with UV treatment, the SPS 250 incorporates a gate, flow regulator and leaf collection basket. Recommended flow: 7.5m³/h. Install a skimmer every 25 m² of water surface. Ø 63 mm and 2" bottom connections, Ø 32 mm excess water connection.

| | Code | Standard Pack | Standard weight in kg | Standard volume in m³ |
|---|---|---|---|---|
| Skimmer with inserts | 58382 | 1 | 3.50 | 0.037 |

Complies with Standards
EN 16582-1

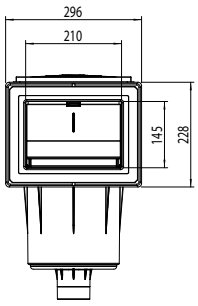


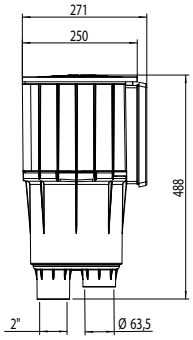

ABS SKIMMERS

# Filtering Skimmer

73158
73159
73160

73161
73162
73163

## DESCRIPTION

17.5 L skimmer with cartridge system integrated. Made of ABS with UV treatment. Incorporate gate, regulator lid height, skimmer basket and 2 cartridge filters. Upper access water connection Ø 32 m, bottom connections of Ø 63 mm and lateral of Ø 50 mm. Lateral connections are for connecting suction nozzles.

The color change is proposed with an inlet sheath, both the embellisher and the floater. This sheath could be installed without changing the skimmer mouth what is very practical to renew or upgrade pools.

## FOR CONCRETE POOLS

| | Code | Standard Pack | Standard weight in kg | Standard volume in m³ |
|---|---|---|---|---|
| **Filtering skimmer - white** | | | | |
| Filtering skimmer with 2 cartridges 16 m³ | 73158 | 1 | 12 | 0.32 |
| Filtering skimmer with 2 cartridges 20 m³ | 73161 | 1 | 13 | 0.32 |

73164
73165

## FOR LINER POOLS

| | Code | Standard Pack | Standard weight in kg | Standard volume in m³ |
|---|---|---|---|---|
| **Prefabricated pools - white**[1] | | | | |
| Filtering skimmer with 2 cartridges 16m³ | 73159 | 1 | 12 | 0.32 |
| Filtering skimmer with 2 cartridges 20m³ | 73162 | 1 | 13 | 0.32 |

## FOR PANELS POOLS

| | Code | Standard Pack | Standard weight in kg | Standard volume in m³ |
|---|---|---|---|---|
| **Panels pools - white** | | | | |
| Filtering skimmer with 2 cartridges 16m³ | 73160 | 1 | 12.5 | 0.32 |
| Filtering skimmer with 2 cartridges 20m³ | 73163 | 1 | 13.5 | 0.32 |

Complies with Standards EN 16713-1

Complies with Standards EN 16582-1 EN 16713-2

## SPARE CARTRIDGES

| | Code | Standard Pack | Standard weight in kg | Standard volume in m³ |
|---|---|---|---|---|
| **Cartridge** | | | | |
| Cartridge 16 m³/h - 15 microns | 73164 | 1 | 1.64 | 0.02 |
| Cartridge 20 m³/h - 15 microns | 73165 | 1 | 2.24 | 0.026 |

Can be complemented with EASYCOLOR color covers, code 73166.

73166CL129

73166CL1144

73166CL090

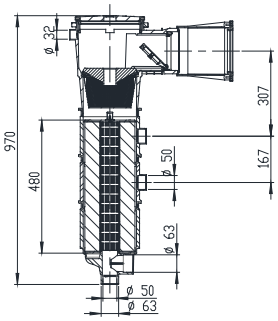


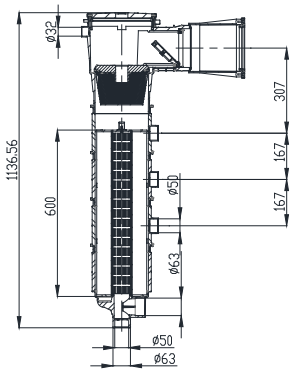


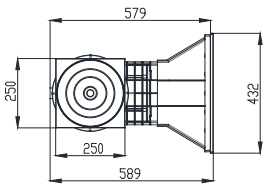


(1) Codes 73159 and 73162 will be delivered with 2 sets of screws – DIN 7982 A4 5.5x25 and 32.

# 15 L skimmers

- All of the components that are exposed in this range of skimmers come with a UV treatment.
- Made of ABS, they come with a weir flap and a flow regulator check valve.
- Bottom suction nozzle connection: 1½" inner thread, 2" outer thread.
- Simultaneous connection to the main drain: Ø 50 mm inner wall.
- Overflow connection: Ø 40 mm.
- Leaf trap.
- Recommended flow rate: 7.5 $m^3$/h.
- It is recommended that one skimmer be installed for every 25 $m^2$ of water surface area.
- All skimmers come in two different models: the model with inserts and the PARKER model, which is supplied with self-tapping screws.

00249CL090

00249

00249CL144

00249CL129

## Skimmer with standard mouth opening

### FOR CONCRETE POOLS

| | Code | Standard Pack | Standard weight in kg | Standard volume in $m^3$ |
|---|---|---|---|---|
| **With round cover** | | | | |
| White | 00249 | 1 | 2.95 | 0.059 |
| Beige | 00249CL090 | 1 | 2.95 | 0.059 |
| Light grey | 00249CL129 | 1 | 2.95 | 0.059 |
| Anthracite grey | 00249CL144 | 1 | 2.95 | 0.059 |
| **With square cover** | | | | |
| White | 00250 | 1 | 3.15 | 0.059 |

Complies with Standards
EN 16582-1
EN 16713-2

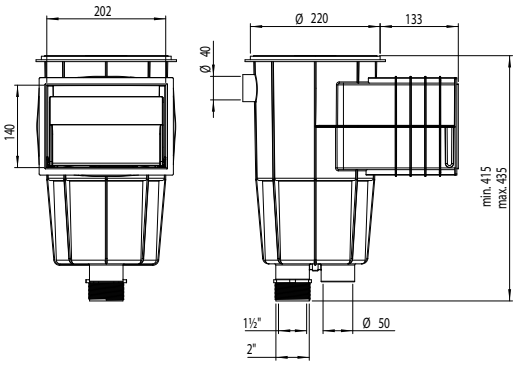

# 15 L skimmers

## Skimmer with standard mouth opening

### FOR LINER POOLS

Supplied with adhesive gasket, bi-injection moulded frame, flange and screws.

| | Code | Standard Pack | Standard weight in kg | Standard volume in m³ |
|---|---|---|---|---|
| **With round snap-on cover** | | | | |
| White | 01461 | 1 | 4.0 | 0.059 |
| **With square snap-on cover** | | | | |
| White | 01462 | 1 | 4.2 | 0.059 |

Complies with Standards
EN 16582-1
EN 16713-2

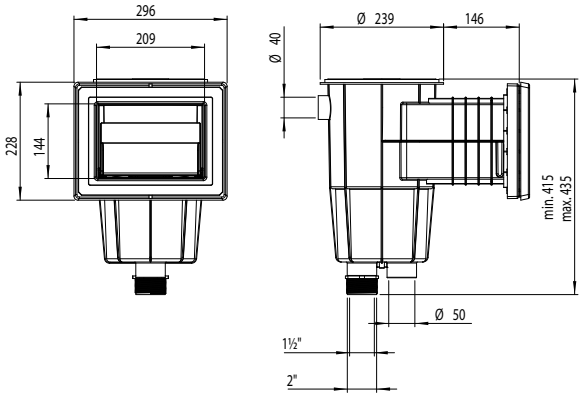

## Skimmer with wide mouth opening

### FOR CONCRETE POOLS

| | Code | Standard Pack | Standard weight in kg | Standard volume in m³ |
|---|---|---|---|---|
| **With round cover** | | | | |
| White | 00251 | 1 | 4.47 | 0.12 |
| Beige | 00251CL090 | 1 | 4.47 | 0.12 |
| Light grey | 00251CL129 | 1 | 4.47 | 0.12 |
| Anthracite grey | 00251CL144 | 1 | 4.47 | 0.12 |
| **With square cover** | | | | |
| White | 00252 | 1 | 3.00 | 0.12 |

Complies with Standards
EN 16582-1
EN 16713-2

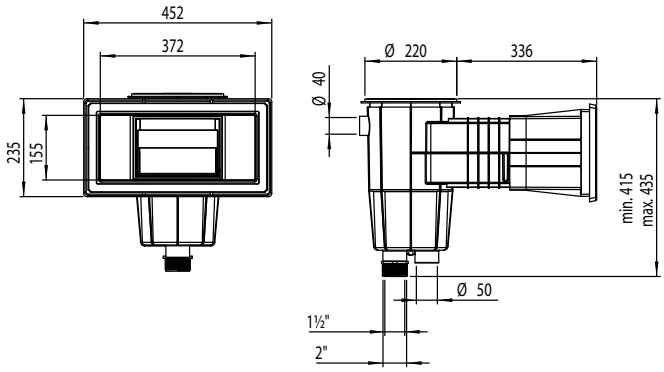

# 15 L skimmers

34413

34413CL090

34413CL129

34413CL144

## Skimmer with wide mouth opening

### FOR LINER POOLS

Supplied with adhesive gaskets, flange and screws.

| | Code | Standard Pack | Standard weight in kg | Standard volume in m³ |
|---|---|---|---|---|
| **Round cover, small embellisher** | | | | |
| White | 01463 | 1 | 5.28 | 0.12 |
| **Square cover with round faceplate, small embellisher** | | | | |
| White | 01464 | 1 | 5.28 | 0.12 |
| **Square cover with square faceplate, big embellisher that covers the flange** | | | | |
| White | 34413 | 1 | 5.04 | 0.12 |
| Beige | 34413CL090 | 1 | 5.04 | 0.12 |
| Light Grey | 34413CL129 | 1 | 5.04 | 0.12 |
| Anthracite Grey | 34413CL144 | 1 | 5.04 | 0.12 |

Complies with Standards
EN 16582-1
EN 16713-2

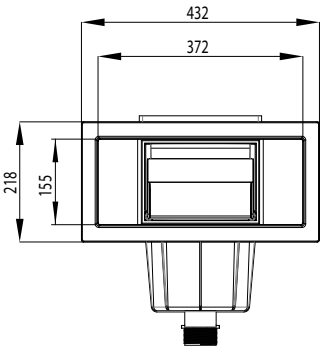


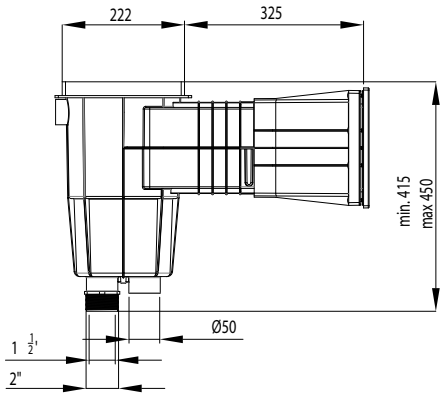

## Skimmer for polyester pools

### with wide mouth opening

### FOR POLYESTER POOLS

15L skimmer, square cover. This skimmer doesn't include gaskets. The installer should insure water tightness between the skimmer and the polyester.

Complies with Standards
EN 16582-1
EN 16713-2

| | Code | Standard Pack | Standard weight in kg | Standard volume in m³ |
|---|---|---|---|---|
| White | 06470 | 1 | 4.32 | 0.12 |

# 15 L skimmers

## Panel Protect skimmer

FOR PANELS POOLS

Supplied with adhesive gaskets, flange and screws. Skimmers specially designed for panel pools. The wide opening assembly should be fitted to the panel from the inside. Supplied with glue. Item 30866 is compatible with EASYCOLOR Inlet sheath item 73166CLXXX to an easy color change of the skimmer embellisher and the floater. This sheath could be installed without change the skimmer mouth what is very practical to renew or upgrade pools.

Complies with Standards
EN 16582-1
EN 16713-2

| | Code | Standard Pack | Standard weight in kg | Standard volume in m³ |
|---|---|---|---|---|
| Wide opening, square cover | 30866 | 1 | 5.13 | 0.116 |

## Floating skimmer

FOR PANELS POOLS

Diameter 160 mm. Maximum flow rate: 5 m³/h. Ø 32 mm and Ø 38 mm outer connections. With plastic support clamp designed for panel pools.

| | Code | Standard Pack | Standard weight in kg | Standard volume in m³ |
|---|---|---|---|---|
| | 16573 | 1 | 1.3 | 0.024 |

ABS SKIMMER ACCESSORIES

# EASYCOLOR - Covers

## for 15 l skimmers

### FOR ALL TYPES OF POOLS

| | Code | Standard Pack | Standard weight in kg | Standard volume in m³ |
|---|---|---|---|---|
| **Round cover, round face plate** | | | | |
| Beige | 00249-0600CL090 | 23 | 7.9 | 0.069 |
| Light grey | 00249-0600CL129 | 23 | 7.9 | 0.069 |
| Anthracite grey | 00249-0600CL144 | 23 | 7.9 | 0.069 |
| **Round cover, square face plate** | | | | |
| Beige | 00249-0700CL090* | 13 | 6.9 | 0.069 |
| Light grey | 00249-0700CL129* | 13 | 6.9 | 0.069 |
| Anthracite grey | 00249-0700CL144* | 13 | 6.9 | 0.069 |

* Compatibles with level regulator 15862 for a color customization of the level regulator.

# EASYCOLOR - Covers

## for 17.5 l skimmers

### FOR ALL TYPES OF POOLS

| | Code | Standard Pack | Standard weight in kg | Standard volume in m³ |
|---|---|---|---|---|
| **Round cover, round face plate** | | | | |
| Beige | 05280-0600CL090 | 15 | 8 | 0.069 |
| Light grey | 05280-0600CL129 | 15 | 8 | 0.069 |
| Anthracite grey | 05280-0600CL144 | 15 | 8 | 0.069 |
| Round cover, square face plate | | | | |
| Beige | 05280-0700CL090 | 15 | 8 | 0.069 |
| Light grey | 05280-0700CL129 | 15 | 8 | 0.069 |
| Anthracite grey | 05280-0700CL144 | 15 | 8 | 0.069 |

# EASYCOLOR - Inlet Sheath

## for wide mouth skimmers

### FOR ALL TYPES OF POOLS

The EASYCOLOR inlet sheath kit allows to change the color of the skimmers wide mouth items 00251, 00252, 01463, 01464, 11304, 11305, 11311, 11314, and11317, both the embellisher and the floater. This sheath could be installed without change the skimmer mouth what is very practical to renew or upgrade pools. This kit includes inlet sheath, floater, flanges and embellisher.

| | Code | Standard Pack | Standard weight in kg | Standard volume in m³ |
|---|---|---|---|---|
| White | 74035 | 1 | 1.22 | 0.022 |
| Beige | 74035CL090 | 1 | 1.22 | 0.022 |
| Light grey | 74035CL129 | 1 | 1.22 | 0.022 |
| Anthracite grey | 74035CL144 | 1 | 1.22 | 0.022 |
| **For Filtering Skimmer and Panel Protect Skimmer** | | | | |
| White | 73166 | 1 | 1.22 | 0.02 |
| Beige | 73166CL090 | 1 | 1.22 | 0.02 |
| Light grey | 73166CL129 | 1 | 1.22 | 0.02 |
| Anthracite | 73166CL144 | 1 | 1.22 | 0.02 |

# EASYCOLOR - Inlet sheath

## for standard mouth skimmers

76497

76497CL129

76497CL090

76497CL144

### FOR ALL TYPES OF POOLS

The EASYCOLOR inlet sheath kit allows to change the color of the skimmers standard mouth items 11306, 11302, 11307, 11303, 11309, 11310, 00249, 00250, 01461 both the embellisher and the floater. This sheath could be installed without change the skimmer mouth what is very practical to renew or upgrade pools. This kit includes inlet sheath, floater, flanges and embellisher.

| | Code | Standard Pack | Standard weight in kg | Standard volume in m³ |
|---|---|---|---|---|
| White | 76497 | 1 | - | - |
| Beige | 76497CL090 | 1 | - | - |
| Light grey | 76497CL129 | 1 | - | - |
| Anthracite grey | 76497CL144 | 1 | - | - |

# Glue for ABS

| | Code | Standard Pack | Standard weight in kg | Standard volume in m³ |
|---|---|---|---|---|
| Glue for ABS | 30884 | 25 | 5.05 | 0.12 |

# Double gasket kits for skimmers

### FOR PANELS POOLS

Kits made up of a double gasket and the screws necessary for the installation of skimmers in panel pools. Made of TPE, the kit enables the installation of various accessories in pool shells and protects the panelling from coming into contact with water. Easy to install. Prevents corrosion of the panelling in the area that has been die cut.

| | Code | Standard Pack | Standard weight in kg | Standard volume in m³ |
|---|---|---|---|---|
| Inserts for wide openings | 14516-0500 | 50 | - | 0.070 |
| Self-tapping screws for wide openings | 14516-0600 | 50 | - | 0.070 |
| Inserts for standard openings | 27124-0500 | 80 | - | 0.035 |
| Self-tapping screws for standard openings | 27124-0600 | 80 | - | 0.035 |
| Inserts for Norm openings | 57289-0500 | 40 | - | 0.070 |
| Self-tapping screws for Norm openings | 57289-0600 | 40 | - | 0.070 |
| Inserts for UNIK openings | 74846-0500 | 20 | - | 0.070 |
| Self-tapping screws for UNIK openings | 74846-0600 | 20 | - | 0.070 |

ABS SKIMMER ACCESSORIES

# Extension ring 15 l skimmer cover

FOR CONCRETE POOLS

Additional extension ring to increase the distance between the 15 l skimmer and the lid. Additional distance of 25 mm. Made of ABS. The height can be increased by overlaying various connections. It can also be slightly tipped to be level with the ground.

| | Code | Standard Pack | Standard weight in kg | Standard volume in m³ |
|---|---|---|---|---|
| | 19919 | 17 | 4.08 | 0.069 |

# Extension ring 17.5 l skimmer cover

FOR CONCRETE POOLS

Additional ring for better adjusting and levelling the 17.5 l skimmer lid to the deck level. Additional distance of 20 mm. Made of white ABS. The height can be increased by overlaying various connections. It can also be slightly tipped to be level with the ground.

| | Code | Standard Pack | Standard weight in kg | Standard volume in m³ |
|---|---|---|---|---|
| | 18153 | 17 | 4.70 | 0.06 |

# Floating weir assembly in ABS

FOR ALL TYPES OF POOLS

Float set with strainer basket in white ABS. Its utility is to retain the filtered leaves in the basket.

| | Code | Standard Pack | Standard weight in kg | Standard volume in m³ |
|---|---|---|---|---|
| For 15 l skimmers | 00253 | 12 | 20.5 | 0.207 |
| For 17.5 l skimmers | 05703 | 12 | 20.5 | 0.207 |

# Prefilters for skimmer basket

FOR ALL TYPES OF POOLS

Hygienic disposable prefilters for any type of skimmer (with baskets up to Ø 24 cm). They retain the waste that builds up in the skimmer basket. This protects the pump and the filter therefore performs better.

| | Code | Standard Pack | Standard weight in kg | Standard volume in m³ |
|---|---|---|---|---|
| 12 units per box | 042745 | 12 | 0.40 | 0.006 |

# SLIM: High water level skimmer

Complies with Standard EN 13451-1-3

Complies with Standards EN 16582-1 EN 16713-2

## FOR CONCRETE POOLS

High water level skimmer allows high water level in the pool (+/- 4 cm) giving an infinite pool effect. The water line is located very close to the top of the pool. Entirely made of AISI-316L. All models are equipped with Ø50 mm overflow and have a housing to mount a water level regulator - item 73453 - not included. Also compatible with the most standard water levels of the market. With connection for equipotential connection. It also includes flanges for prefabricated pools. Recommended flow 7.5 m³/h. Basket capacity 1.2 L.

| | Code | Standard Pack | Standard weight in kg | Standard volume in m³ |
|---|---|---|---|---|
| Mouth width 500 mm | 73501 | 1 | 14.80 | 0.136 |
| Mouth width 650 mm | 73502 | 1 | 15.20 | 0.169 |

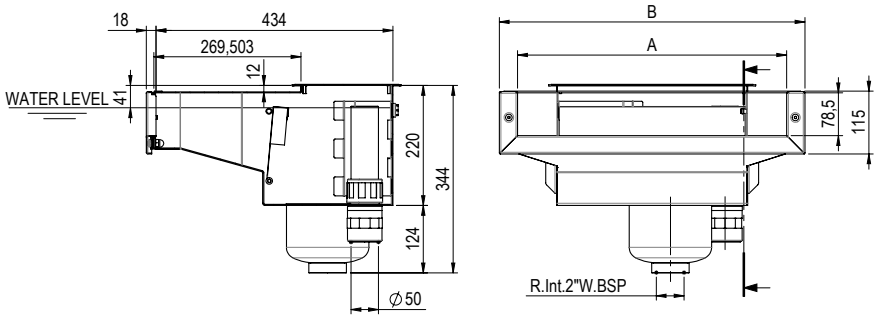


# SLIM: S.S. Skimmer A-500 & A-650

## Large mouth

Complies with Standard EN 13451-1-3

Complies with Standards EN 16582-1 EN 16713-2

## FOR CONCRETE AND LINER POOLS

In AISI-316L stainless steel. With Ø50mm overflow, basket and lid in stainless steel, both included. It has accommodation to mount the level regulator valve 73453 (see page 118). With connection for equipotential connection. Flow recommended 7.5 m³ / h. Items 56313 and 56316 includes flanges for liner applications. Also exist with 6° inclination: items 72744 and 72743 see page 114. Water level +/- 8 cm. Basket capacity 1.2L.

| | Code | Standard Pack | Standard weight in kg | Standard volume in m³ |
|---|---|---|---|---|
| Mouth width 500 mm | 56313 | 1 | 14.84 | 0.136 |
| Mouth width 650 mm | 56316 | 1 | 14.84 | 0.136 |

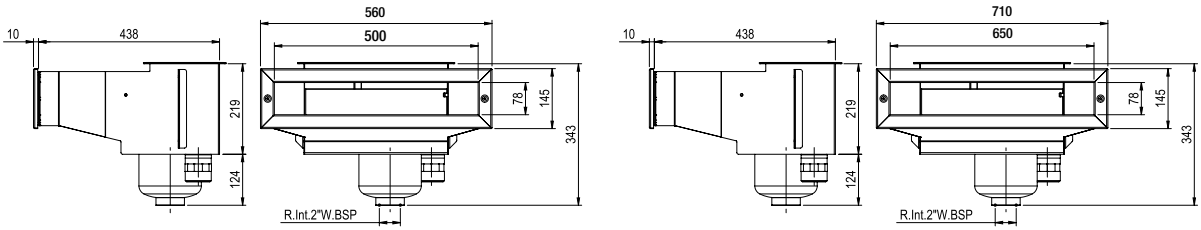

STAINLESS STEEL SKIMMERS

# SLIM: S.S. Skimmer A-500

## Large mouth

Complies with Standard EN 13451-1-3

Complies with Standards EN 16582-1 EN 16713-2

### FOR POLYESTER POOLS

In AISI-316L stainless steel. With Ø 50 mm overflow, basket and lid in stainless steel, both included. It has accommodation to mount the level regulator valve 73453 (see page 118). With connection for equipotential connection. Flow recommended 7.5 m³ / h. Water level +/- 8 cm. basket capacity 1,2L.

| | Code | Standard Pack | Standard weight in kg | Standard volume in m³ |
|---|---|---|---|---|
| Mouth width 500 mm, 6° inclination | 72744 | 1 | 14.84 | 0.136 |
| Mouth width 650 mm, 6° inclination | 72743 | 1 | 14.84 | 0.136 |

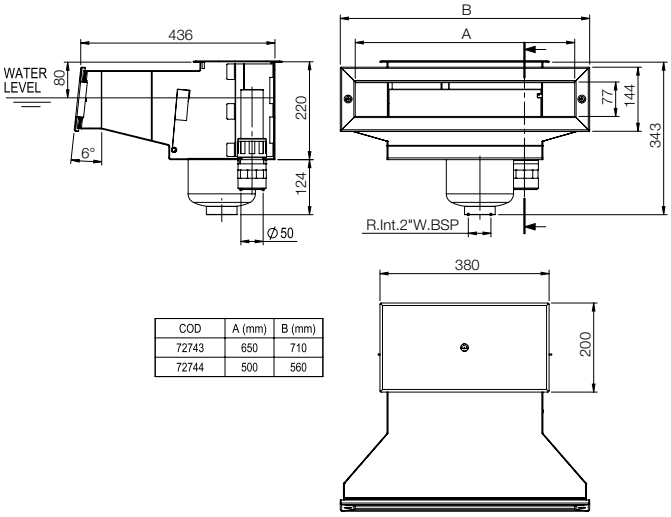


| COD | A (mm) | B (mm) |
|---|---|---|
| 72743 | 650 | 710 |
| 72744 | 500 | 560 |

# Full A-100 Skimmer S.S.

Complies with Standards EN 16582-1 EN 16713-2

### FOR CONCRETE POOLS

In AISI-316L stainless steel. With Ø 50mm overflow. Stainless Steel basket and lid included. Basket capacity 1.2 L. Comes with housing for assembling the 00256 level regulator valve (see page 118). With connection for an equipotential outlet. Recommended flow rate: 7.5 m³/h. Does not include trim code 00255. For liner, prefabricated and panel pools use coupling kit 07525 not included.

| | Code | Standard Pack | Standard weight in kg | Standard volume in m³ |
|---|---|---|---|---|
| Suction connection, 2" thread | 00254 | 1 | 8.4 | 0.04 |

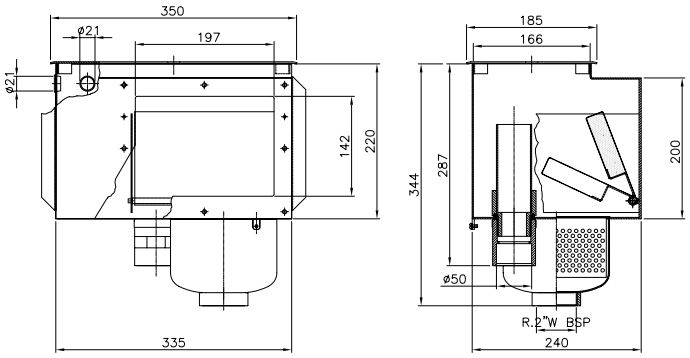

# A-201 skimmer body

Complies with Standards
EN 16582-1
EN 16713-2

## FOR CONCRETE POOLS

In AISI-316L stainless steel. With Ø 50mm overflow. Skimmer housing without telescopic lid. Comes with housing for assembling the 00256 level regulator valve (see page 118). With connection for an equipotential outlet. Basket can be removed from front. Does not include trim code 07251. Ø 63 mm suction connection. For liner, prefabricated and panel pools use coupling kit 07525 not included.

| | Code | Standard Pack | Standard weight in kg | Standard volume in m³ |
|---|---|---|---|---|
| | 07520 | 1 | 6.51 | 0.04 |

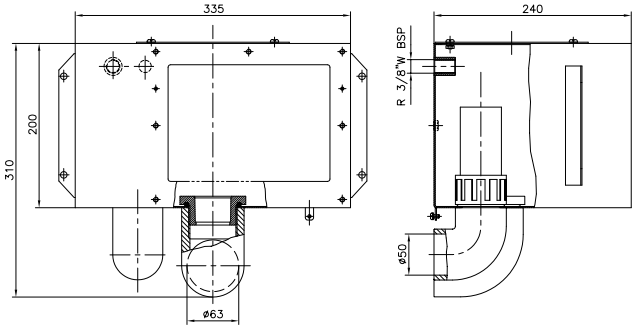


# A-202 skimmer body

Complies with Standards
EN 16582-1
EN 16713-2

## FOR CONCRETE POOLS

In AISI-316L stainless steel. With Ø 50 mm overflow. Skimmer housing without telescopic lid. With earth connection. Basket can be removed from front. Does not include trim code 07251. For liner, prefabricated and panel pools use coupling kit 07525 not included.

| | Code | Standard Pack | Standard weight in kg | Standard volume in m³ |
|---|---|---|---|---|
| **Ø 63 mm suction connection** | 07610 | 1 | 5.25 | 0.04 |

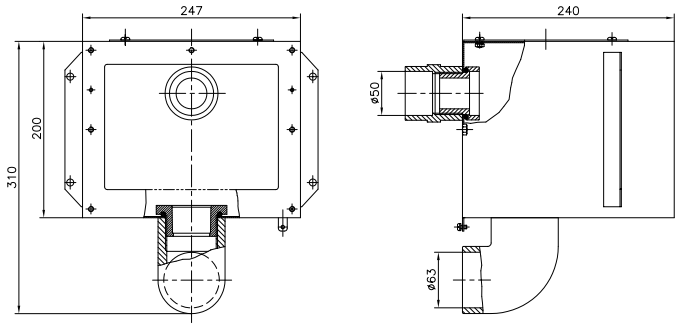

# Basket for A-201 and A-202 skimmers

## FOR CONCRETE POOLS

Basket in AISI-316L stainless steel. Includes face plate for direct removal through skimmer opening. Basket capacity 4.6L.

| | Code | Standard Pack | Standard weight in kg | Standard volume in m³ |
|---|---|---|---|---|
| | 07521 | 1 | 2.19 | 0.02 |

Complies with Standards
EN 16582-1
EN 16713-2

# A-400 skimmer body

## FOR CONCRETE POOLS

In AISI-316L stainless steel. With Ø 50mm overflow. Skimmer housing without telescopic lid. Comes with housing for assembling the 00256 level regulator valve (see page 118). With connection for an equipotential outlet. For liner, prefabricated and panel pools use coupling kit 07526 not included.

| | Code | Standard Pack | Standard weight in kg | Standard volume in m³ |
|---|---|---|---|---|
| **Ø 63 mm suction connection** | 07523 | 1 | 8.0 | 0.06 |

Complies with Standards
EN 16582-1
EN 16713-2

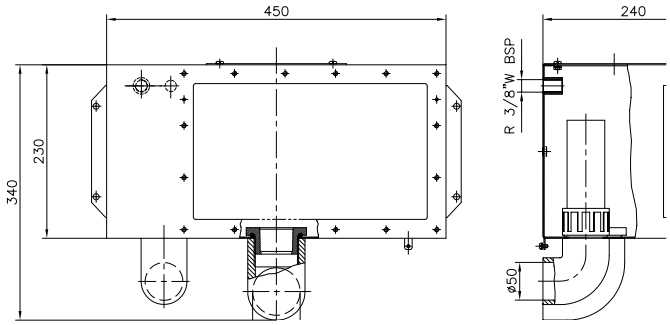

# Basket for A-400 skimmer

## FOR CONCRETE POOLS

Direct removal through skimmer throat. Wide model. In AISI-316L stainless steel. Basket capacity 11L.

| | Code | Standard Pack | Standard weight in kg | Standard volume in m³ |
|---|---|---|---|---|
| | 07522 | 1 | 3.5 | 0.04 |

Complies with Standards
EN 16582-1
EN 16713-2

# Decorative face plate

Complies with Standards
EN 16582-1
EN 16713-2

## FOR CONCRETE POOLS

For skimmer 00254. Made of AISI-316L stainless steel.

| | Code | Standard Pack | Standard weight in kg | Standard volume in m³ |
|---|---|---|---|---|
| | 00255 | 1 | 0.62 | 0.003 |

# Coupling kit

## for stainless steel skimmers

Complies with Standards
EN 16582-1
EN 16713-2

## FOR LINER AND PREFABRICATED POOLS

For liner, prefabricated and panel pools. Includes: 2 elastic gaskets, AISI-316 stainless steel frame and screws for assembling.

| | Code | Standard Pack | Standard weight in kg | Standard volume in m³ |
|---|---|---|---|---|
| For A-100, A-201 and A-202 skimmers (00254, 07520 and 07610) | 07525 | 1 | 0.78 | 0.002 |
| For A-400 skimmer (code 07523) | 07526 | 1 | 1.13 | 0.01 |

# Stainless Steel embellisher

## for Skimmers

## FOR LINER AND PREFABRICATED POOLS

AISI-316L embellishers for ABS skimmers. Includes flange, screws and gaskets.

| | Code | Standard Pack | Standard weight in kg | Standard volume in m³ |
|---|---|---|---|---|
| ABS standard mouth skimmers items 01461 (15L), 01462 (15L), 11309 (17.5L), 11310 (17.5L) | 56344 | 1 | 1.5 | 0.004 |
| ABS wide mouth skimmers items 01463 (15L), 01464 (15L), 11311 (17.5L), 11313 (17.5L) | 56340 | 1 | 1.87 | 0.005 |
| ABS skimmer NORM item 56176 | 74101 | 1 | 1.76 | 0.001 |

# Telescopic lid

Complies with Standard
EN 13451-1-3

Complies with Standards
EN 16582-1
EN 16713-2

## FOR CONCRETE POOLS

In AISI-316L stainless steel. For models A-201, A-202 and A-400. 180 x 180 mm lid. Adjustable height from 60 to 110 mm.

| | Code | Standard Pack | Standard weight in kg | Standard volume in m³ |
|---|---|---|---|---|
| | 07524 | 1 | 1.63 | 0.01 |

# UNIK level sensor

## FOR ALL TYPES OF POOLS

Level sensor completely integrated in the UNIK skimmers.
Adjustable Water level sensor with an ABS protective cover.
10 meter cable included.
The sensor level kit is located and fixed in a corner of the skimmer.
The user can adjust the water level along the skimmer mouth heigh (+/-70 mm).
The sensor level can regulate water level oscillation +/-10 mm.



| | Code | Standard Pack | Standard weight in kg | Standard volume in m³ |
|---|---|---|---|---|
| UNIK Level sensor | 75973 | 1 | 0.40 | 0.002 |

# Universal level regulator

## FOR ALL TYPES OF POOLS

Made of ABS. May be connected from the bottom or side, as required. Semi-die cut outlets to the pool so that the most suitable connection can be made. Adjustable lid height and level. For all types of skimmers. Cover color can be changed using the 15L skimmers covers from page 110.

| Code | Standard Pack | Standard weight in kg | Standard volume in m³ |
|---|---|---|---|
| 15862 | 1 | 2.0 | 0.016 |

# Water level regulator valve

## FOR CONCRETE POOLS

Can be fitted to all stainless steel skimmers, except for model A-202, 56313-56316-72743-72744-73501-73502.
Adjustable opening. 3/8" connection.

| Code | Standard Pack | Standard weight in kg | Standard volume in m³ |
|---|---|---|---|
| 00256 | 1 | 0.21 | 0.002 |

# Level regulating valve

## FOR CONCRETE POOLS

Level regulator valve compatible with the stainless steel skimmers of SLIM range. Compatible with items: 56313, 56316, 72743, 72744, 73501 73502. With 3/8" side connection and adjustable floater.

| Code | Standard Pack | Standard weight in kg | Standard volume in m³ |
|---|---|---|---|
| 73453 | 1 | 0.9 | 0.008 |

# Pool main drains information

## EN 16713-02: 2016 - main drains

| RISK OF ENTRAPMENT<br>How to prevent it? | | |
|---|---|---|
| NEW POOL | **ANTI-VORTEX COVER**<br>Number of main drains per pool: **1**. | |
| | **NON ANTI-VORTEX COVER**<br>Number of main drains per pool: **2** balanced main drains, **distanced at minimum 1 meter**.<br>And **if any** of the **2 main drains** is **blocked**, the remaining **one should be able to absorb 100%** of the installation flow. | |
| POOL RENOVATION | **WITH MAIN DRAIN BODY CHANGE**<br>Applies **new pool rules**. | |
| | **UNCHANGED MAIN DRAIN BODY**<br>Install an **anti-vortex grille** on pre-installed main drain. | |
| CAVITY DIMENSION | Main drain should respect a certain cavity dimensions according to a mathematical rule. | |
| OTHERS | Other requisites are considered to define that a main drain in compliant with EN, like design.<br>e.g. the design of the grill to avoid human body parts or hair entrapment. | |
| **Suction rate:** insure a maximum of 0.5 m/s paragraph 4.6.1 | | |

**Only with the fulfillment of all requisites of the standard, a Compliance Certification can be delivered!**

*Anti-vortex plate is a special component installed in the suction line to control the turbulence in a flowing fluid. These plates allows to control the velocity of the fluid thus preventing cavitation in the fluid according to UNE-EN 13451-3.

# NORM main drain

- All main drains in the range are supplied with UV protection.
- To prevent the risk of suction, install the main drains according to local regulations.
- Recommended use: Maximum suction rate of 0.5 m/s.

56379

56379CL090

56379CL129

56379CL144

56378

**Also available in other colours**

## NORM main drain

### DESCRIPTION

Range of main drains suitable for public and private swimming pools. Supplied with flat or antivortex grilles. Manufactured in ABS with UV treatment, fitted with a 2" side outlet and a 1½" bottom outlet connection, bottom outlet covered by semi-die cut tab.

### FOR CONCRETE POOLS

| | Code | Standard Pack | Standard weight in kg | Standard volume in m³ |
|---|---|---|---|---|
| **Antivortex grating** | | | | |
| White | 56379 | 4 | 10.60 | 0.069 |
| Beige | 56379CL090 | 4 | 10.60 | 0.069 |
| Light Grey | 56379CL129 | 4 | 10.60 | 0.069 |
| Anthracite Grey | 56379CL144 | 4 | 10.60 | 0.069 |
| **Flat grating** | | | | |
| White | 56378 | 4 | 10.60 | 0.069 |
| Beige | 56378CL090 | 4 | 10.60 | 0.069 |
| Light Grey | 56378CL129 | 4 | 10.60 | 0.069 |
| Anthracite Grey | 56378CL144 | 4 | 10.60 | 0.069 |

### FOR LINER AND POLYESTER POOLS

| | Code | Standard Pack | Standard weight in kg | Standard volume in m³ |
|---|---|---|---|---|
| **Antivortex grating with inserts** | | | | |
| White | 56382 | 4 | 10.60 | 0.069 |
| Beige | 56382CL090 | 4 | 10.60 | 0.069 |
| Light Grey | 56382CL129 | 4 | 10.60 | 0.069 |
| Anthracite Grey | 56382CL144 | 4 | 10.60 | 0.069 |
| **Antivortex grating without inserts** | | | | |
| White | 56383 | 4 | 10.60 | 0.069 |
| Beige | 56383CL090 | 4 | 10.60 | 0.069 |
| Light Grey | 56383CL129 | 4 | 10.60 | 0.069 |
| Anthracite Grey | 56383CL144 | 4 | 10.60 | 0.069 |
| **Flat grating with inserts** | | | | |
| White | 56380 | 4 | 10.60 | 0.069 |
| Beige | 56380CL090 | 4 | 10.60 | 0.069 |
| Light Grey | 56380CL129 | 4 | 10.60 | 0.069 |
| Anthracite Grey | 56380CL144 | 4 | 10.60 | 0.069 |
| **Flat grating without inserts** | | | | |
| White | 56381 | 4 | 10.60 | 0.069 |
| Beige | 56381CL090 | 4 | 10.60 | 0.069 |
| Light Grey | 56381CL129 | 4 | 10.60 | 0.069 |
| Anthracite Grey | 56381CL144 | 4 | 10.60 | 0.069 |

56382CL090

56382

56382CL144

56382CL129

56380

Only antivortex main drain

Complies with Standards
EN 13451-1
EN 12451-3

# Round Ø 210 mm main drain

## with ABS grille

**Possibility to convert into NORM changing the grille - Page 124**

### DESCRIPTION

2" side outlet. Body and grille in ABS. Comes with self-adhesive gaskets, flange and screws. Maximum recommended flow rate: 13 m³/h.

### FOR CONCRETE POOLS

Body and grill in ABS. Grill fitted using screws. Max. flow rate: 13 m³/h.

| | Code | Standard Pack | Standard weight in kg | Standard volume in m³ |
|---|---|---|---|---|
| White | 01467 | 4 | 2.8 | 0.028 |
| Beige | 01467CL090 | 4 | 2.8 | 0.028 |
| Light Grey | 01467CL129 | 4 | 2.8 | 0.028 |
| Anthracite Grey | 01467CL144 | 4 | 2.8 | 0.028 |

### FOR LINER AND POLYESTER POOLS

| | Code | Standard Pack | Standard weight in kg | Standard volume in m³ |
|---|---|---|---|---|
| **Ø 210 mm main drain with ABS grille with inserts** | | | | |
| White | 00271 | 4 | 4.0 | 0.033 |
| Beige | 00271CL090 | 4 | 4.0 | 0.033 |
| Light Grey | 00271CL129 | 4 | 4.0 | 0.033 |
| Anthracite Grey | 00271CL144 | 4 | 4.0 | 0.033 |
| **Ø 210 mm main drain with ABS grille, without inserts** | | | | |
| White | 06474 | 4 | 4.0 | 0.033 |
| Beige | 06474CL090 | 4 | 4.0 | 0.033 |
| Light Grey | 06474CL129 | 4 | 4.0 | 0.033 |
| Anthracite Grey | 06474CL144 | 4 | 4.0 | 0.033 |

Complies with Standards EN 16582-1

# Round Ø 200 mm main drain

## with antivortex grille

Complies with Standards EN 16582-1

**Possibility to convert into NORM changing the grille - Page 124**

### DESCRIPTION

Manufactured in white ABS material. 2" side outlet and 1½" bottom outlet. Bottom outlet covered by semi-die cut socket, which can be opened as required. Possibility of fitting drainage tube code 21581 (see page 124). Max. flow rate: 13 m³/h.

### FOR CONCRETE POOLS

| | Code | Standard Pack | Standard weight in kg | Standard volume in m³ |
|---|---|---|---|---|
| White | 27837 | 4 | 2.807 | 0.033 |

### FOR LINER AND POLYESTER POOLS

| | Code | Standard Pack | Standard weight in kg | Standard volume in m³ |
|---|---|---|---|---|
| White | 27125 | 4 | 3.543 | 0.033 |

ABS MAIN DRAINS

# Round Ø 200 mm main drain

## with flat grille

27839

27838

Complies with Standards EN 16582-1

**Possibility to convert into NORM changing the grille - Page 124**

### DESCRIPTION

Made of white ABS. 2" side outlet and 1½" bottom outlet. Bottom outlet covered by a semi-die cut tab, which may be removed if necessary. A drainage pipe (code drainage code 21581, see page 124). Max. flow rate: 13 m³/h..

### FOR CONCRETE POOLS

| | Code | Standard Pack | Standard weight in kg | Standard volume in m³ |
|---|---|---|---|---|
| White | 27839 | 4 | 2.807 | 0.033 |

### FOR LINER AND POLYESTER POOLS

| | Code | Standard Pack | Standard weight in kg | Standard volume in m³ |
|---|---|---|---|---|
| White | 27838 | 4 | 3.391 | 0.033 |

# Mini main drain

Complies with Standards EN 16582-1

### FOR CONCRETE POOLS

Side outlet drain assembly with 2" inner thread. Made of white ABS with grille fixed to flange. Suction velocity at grille of 0.5 m/s and flow rate of 11 m³/h. The slots in the grille are no larger than 8 mm, in compliance with regulations. M5 screws and brass inserts for fastening the flange and grille. Can be used in concrete spas and side suction inlets.

| | Code | Standard Pack | Standard weight in kg | Standard volume in m³ |
|---|---|---|---|---|
| Mini main drain - White | 27814 | 4 | 2.64 | 0.013 |

ABS MAIN DRAINS

# Square 210 mm x 210 mm

## main drain

Complies with Standards EN 16582-1

### FOR CONCRETE POOLS

2" side Outlet. Body and grille in White ABS. Grille fitted using screws. max. flow rate: 13 m³/h

| | Code | Standard Pack | Standard weight in kg | Standard volume in m³ |
|---|---|---|---|---|
| White | 00258 | 4 | 4.0 | 0.044 |

# Ø 200 drain grille in ABS

Complies with Standards EN 16582-1

### FOR CONCRETE POOLS

Ring support and grille in white ABS. Supplied with grille fixing screws. This grille is for suction chamber done on site.

| | Code | Standard Pack | Standard weight in kg | Standard volume in m³ |
|---|---|---|---|---|
| | 00280 | 10 | 3.0 | 0.031 |

74097

74097CL090

74097CL129

74097CL144

Complies with Standards EN 16582-1

Complies with Apt.4.4.1 b.2 of EN 16713-2:2017

# NORM Main drain grille

## for pool standard compliance

### FOR ALL TYPES OF POOLS

Grille to replace the grilles on already installed main drains in private pools, to meet pool regulations. Made of ABS. Compatible with main drains 01467, 27837, 27839, 00270, 00271, 06474, 07880.

| | Code | Standard Pack | Standard weight in kg | Standard volume in m³ |
|---|---|---|---|---|
| **Grille** | | | | |
| White | 74097 | 6 | 3 | 0.033 |
| Beige | 74097CL090 | 6 | 3 | 0.033 |
| Light grey | 74097CL129 | 6 | 3 | 0.033 |
| Anthracite grey | 74097CL144 | 6 | 3 | 0.033 |

# Hydrostatic valve

### FOR CONCRETE AND LINER POOLS

To alleviate the pressure that can build up under the pool shell due to groundwater, it is recommended that a hydrostatic valve and a drainage pipe be fitted to the main drain. Hydrostatic valve to be fitted to the 2" bottom outlet on main drains. Made of white ABS, with stainless steel screw and spring. 1½" male thread..

| Code | Standard Pack | Standard weight in kg | Standard volume in m³ |
|---|---|---|---|
| 00277 | 50 | 2.63 | 0.01 |

# Drainage pipe

### FOR CONCRETE AND LINER POOLS

Drainage pipe with 1½" BSP thread connection for main drains with code numbers 01466, 27837 and 27839. Made of ABS.

| Code | Standard Pack | Standard weight in kg | Standard volume in m³ |
|---|---|---|---|
| 21581 | 24 | 3.54 | 0.021 |

STAINLESS STEEL MAIN DRAINS

# STYLE main drain

## in stainless steel. Outlet 2"

75180, 75181
75184, 75185

75182, 75183
751866, 75187

Complies with Standards
UNE-EN 16582-1
UNE-EN-16713-2

## DESCRIPTION

Range of main drains manufactured in full SS AISI-316L, fitted with an 2" side outlet connection.

The entire range shares the same main body, with different grating options, flat or antivortex and round or square grilles.

For liner aplications come with gaskets and screws.

Maximum flow rate: 13 m³/h.

## FOR CONCRETE POOLS

| | Code | Standard Pack | Standard weight in kg | Standard volume in m³ |
|---|---|---|---|---|
| Round 2" - Antivortex grating | 75180 | 1 | 3.97 | 0.026 |
| Round 2" - Flat grating | 75181 | 1 | 3.7 | 0.026 |
| Square 2" - Antivortex grating | 75182 | 1 | 4.2 | 0.026 |
| Square 2" - Flat grating | 75183 | 1 | 3.96 | 0.026 |

## FOR LINER AND PREFABRICATED POOLS

| | Code | Standard Pack | Standard weight in kg | Standard volume in m³ |
|---|---|---|---|---|
| Round 2" - Antivortex grating | 75184 | 1 | 4.06 | 0.026 |
| Round 2" - Flat grating | 75185 | 1 | 3.79 | 0.026 |
| Square 2" - Antivortex grating | 75186 | 1 | 4.3 | 0.026 |
| Square 2" - Flat grating | 75187 | 1 | 4.05 | 0.026 |

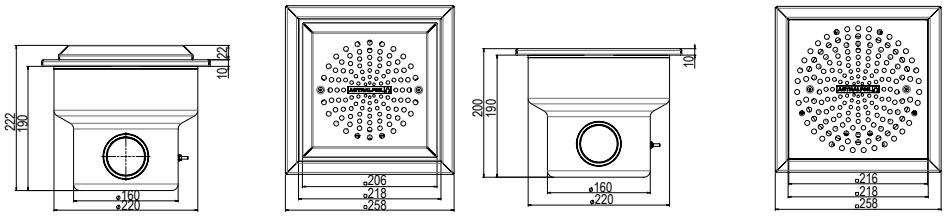


75182-75186 75183- 75187

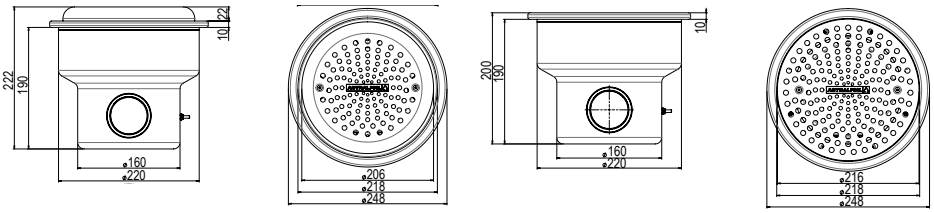


75180-75184 75181-75185

STAINLESS STEEL MAIN DRAINS

# Round main drain

## in stainless steel. 2" outlet

00268

26196

Complies with Standards
UNE-EN 16582-1
UNE-EN-16713-2

### FOR CONCRETE POOLS

2" side outlet. Made of stainless steel. AISI-316L. Grille fitted using screws. Maximum flow rate: 13 m³/h.

| | Code | Standard Pack | Standard weight in kg | Standard volume in m³ |
|---|---|---|---|---|
| 2" side outlet" | 00268 | 1 | 2.56 | 0.02 |
| 2" side outlet and 1½" bottom outlet connection | 26196 | 1 | 2.80 | 0.02 |

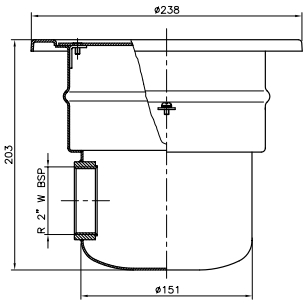


# Round main drain in stainless steel

Complies with Standards
EN 16582-1

### FOR LINER AND PREFABRICATED POOLS

2" side outlet. Made of AISI-316L stainless steel. Grille fitted using screws. Comes with gaskets, flange and screws. Maximum recommended flow rate: 13 m³/h.

| | Code | Standard Pack | Standard weight in kg | Standard volume in m³ |
|---|---|---|---|---|
| 2" side outlet" | 00275 | 1 | 2.27 | 0.02 |
| 2" side outlet and 1½" bottom outlet connections | 26197 | 1 | 4.23 | 0.04 |

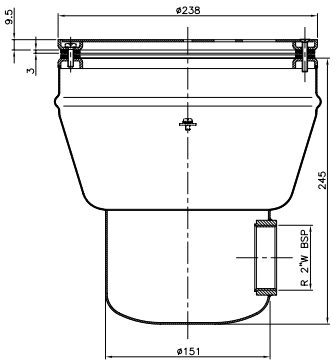

# Main drain with square cover

## in stainless steel. Outlet 1 ½"

Complies with Standards
EN 16582-1
EN-16713-2

### FOR CONCRETE POOLS

Bottom outlet 1½". Manufactured in stainless steel. AISI-316L Antivortex lid. Can be used in concrete and prefabricated pools with an 00276 adapter. Maximum flow rate: 6 m³/h.

| | Code | Standard Pack | Standard weight in kg | Standard volume in m³ |
|---|---|---|---|---|
| Bottom 1½" outlet | 08463 | 1 | 1.14 | 0.01 |

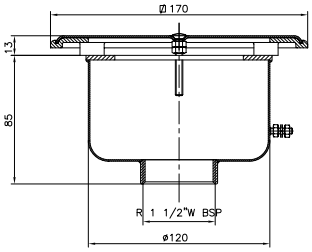


# Main drain with square cover

## in stainless steel. 2" outlet

### FOR CONCRETE POOLS

2" side outlet. Manufactured in stainless steel. AISI-316L. Antivortex lid. Can be used in concrete and prefabricated pools with a 00276 adapter (see page 129). Maximum flow rate: 6 m³/h.

| | Code | Standard Pack | Standard weight in kg | Standard volume in m³ |
|---|---|---|---|---|
| | 00269 | 1 | 1.14 | 0.01 |

# Ø 200 drain grille in stainless steel

Complies with Standard
EN 13451-1-3

Complies with Standards
EN 16582-1
EN 16713-2

### FOR CONCRETE POOLS

Support ring in white plastic, grille in AISI-316L stainless steel. Supplied with grille fixing screws. Maximum recommended flow rate: 13 m³/h.

| | Code | Standard Pack | Standard weight in kg | Standard volume in m³ |
|---|---|---|---|---|
| | 00279 | 10 | 6.0 | 0.02 |

# Ø 300 drain grille in stainless steel

### FOR CONCRETE POOLS

Support ring in aluminium, grille in AISI-316L stainless steel. Supplied with grille fixing screws. Maximum recommended flow rate: 27 m³/h.

| | Code | Standard Pack | Standard weight in kg | Standard volume in m³ |
|---|---|---|---|---|
| | 00282 | 4 | 5.8 | 0.02 |

STAINLESS STEEL MAIN DRAINS

# Drain grille in stainless steel

## FOR CONCRETE POOLS

Designed for concrete pools. Support frame and grille in polished stainless steel. Supplied with fixing screws. Other sizes can be made to order.

| | | Code | Standard Pack | Standard weight in kg | Standard volume in m³ |
|---|---|---|---|---|---|
| **AISI-304L** | | | | | |
| **Size (mm)** | **Max. recommended flow rate** | | | | |
| 200 x 200 | 15 m³/h (0.5 m/s) | 00284 | 1 | 1.2 | 0.01 |
| 300 x 300 | 43 m³/h (0.5 m/s) | 00285 | 1 | 2.2 | 0.01 |
| 400 x 400 | 83 m³/h (0.5 m/s) | 00286 | 1 | 4.0 | 0.03 |
| 500 x 500 | 136 m³/h (0.5 m/s) | 00287 | 1 | 4.5 | 0.04 |
| **AISI-316L** | | | | | |
| **Size (mm)** | **Max. recommended flow rate** | | | | |
| 200 x 200 | 15 m³/h (0.5 m/s) | 30764 | 1 | 1.2 | 0.01 |
| 300 x 300 | 43 m³/h (0.5 m/s) | 30765 | 1 | 2.2 | 0.01 |
| 400 x 400 | 83 m³/h (0.5 m/s) | 30766 | 1 | 4.0 | 0.03 |
| 500 x 500 | 136 m³/h (0.5 m/s) | 30767 | 1 | 4.5 | 0.04 |

STAINLESS STEEL MAIN DRAINS - STAINLESS STEEL MAIN DRAINS ACCESSORIES

74807
74808

Complies with Standards
UNE-EN 16582-1
UNE-EN-16713-2

# Grille for S.S. main drains

## for pool standard compliance

## DESCRIPTION

Grille to replace the grilles on already installed main drains in private pools, to meet pool regulations. Made of SS AISI-316L.

## FOR CONCRETE POOLS

| | Code | Standard Pack | Standard weight in kg | Standard volume in m³ |
|---|---|---|---|---|
| Antivortex main drain grille<br>Compatible with main drains<br>00268, 26196 | 74807 | 1 | 0.8 | 0.017 |

## FOR LINER AND PREFABRICATED POOLS

Grille to replace the grilles on already installed main drains in private pools, to meet pool regulations. Made of SS AISI-316L. Compatible with main drains 00275, 26197.

| | Code | Standard Pack | Standard weight in kg | Standard volume in m³ |
|---|---|---|---|---|
| Antivortex main drain grille (Liner)<br>Compatible with main drains<br>00275, 26197 | 74808 | 1 | 0.8 | 0.017 |

STAINLESS STEEL MAIN DRAINS

# Adaptor kit for main drain

FOR LINER AND PREFABRICATED POOLS

For main drain 00269. Comes with gaskets, flange and screws. Flange in AISI-316L stainless steel.

| | Code | Standard Pack | Standard weight in kg | Standard volume in m³ |
|---|---|---|---|---|
| | 00276 | 40 | 9.7 | 0.01 |

69173

69174

# Stainless Steel embellisher

## for ABS main drains

FOR LINER AND PREFABRICATED POOLS

AISI-316L embellishers for ABS main drains. It includes screws.

| | Code | Standard Pack | Standard weight in kg | Standard volume in m³ |
|---|---|---|---|---|
| For ABS main drain 00270 | 69173 | 1 | 1.44 | 0.001 |
| For ABS main drain 00271 | 69174 | 1 | 1.21 | 0.003 |

MAIN DRAIN ACCESSORIES

# Hydrostatic valve

FOR CONCRETE AND LINER POOLS

To alleviate the pressure that can build up under the pool shell due to groundwater, it is recommended that a hydrostatic valve and a drainage pipe be fitted to the main drain. Hydrostatic valve to be fitted to the 2" bottom outlet on main drains. Made of white ABS, with stainless steel screw and spring. 1½" male thread..

| | Code | Standard Pack | Standard weight in kg | Standard volume in m³ |
|---|---|---|---|---|
| | 00277 | 50 | 2.63 | 0.01 |

# Drainage pipe

FOR CONCRETE AND LINER POOLS

Drainage pipe with 1½" BSP thread connection for main drains with code numbers 01466, 27837 and 27839. Made of ABS.

| | Code | Standard Pack | Standard weight in kg | Standard volume in m³ |
|---|---|---|---|---|
| | 21581 | 24 | 3.54 | 0.021 |

ABS NOZZLES

# NORM return inlet nozzle

56498

56499

56499CL090

56499CL129

56499CL144

Complies with Standards
EN 16582-1
EN 16713-2

## DESCRIPTION

Range of inlets suitable for installation in public and private pools. Manufactured in white ABS with UV treatment. Outer 2" thread and Ø 50 mm inner wall to be glued.

## FOR CONCRETE POOLS

| | Code | Standard Pack | Standard weight in kg | Standard volume in m³ |
|---|---|---|---|---|
| White | 56498 | 24 | 4.5 | 0.020 |

## FOR LINER POOLS

| | Code | Standard Pack | Standard weight in kg | Standard volume in m³ |
|---|---|---|---|---|
| White | 56499 | 12 | 4.5 | 0.020 |
| Beige | 56499CL090 | 12 | 4.5 | 0.020 |
| Light Grey | 56499CL129 | 12 | 4.5 | 0.020 |
| Anthracite Grey | 56499CL144 | 12 | 4.5 | 0.020 |

## FOR POLYESTER POOLS

| | Code | Standard Pack | Standard weight in kg | Standard volume in m³ |
|---|---|---|---|---|
| White | 56500 | 24 | 4.5 | 0.020 |
| Beige | 56500CL090 | 24 | 4.5 | 0.020 |
| Light Grey | 56500CL129 | 24 | 4.5 | 0.020 |
| Anthracite Grey | 56500CL144 | 24 | 4.5 | 0.020 |

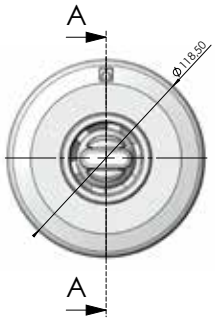


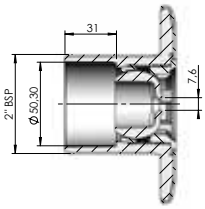


SECCIÓN A-A

# Multiflow return inlet nozzles

## Multiflow system

- The inlet's eyeball is supplied pre-marked with a number of diameters (14, 20 and 25). With the help of a punch (also supplied with the inlet) one of the diameters can be cut out at the time of installation.
- Max. recommended flow rate for a max. flow of 4 m/s: Ø 14 mm = 2.2 m³/h, Ø 20 mm = 4.5 m³/h, Ø 25 mm = 7 m³/h

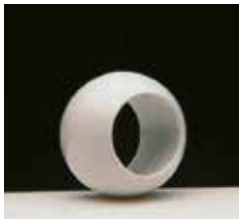

Complies with Standards
EN 16582-1
EN 16713-2

## Multiflow return inlet nozzle to be glued

### FOR CONCRETE POOLS

To be glued to Ø 50 mm outer wall. Made of ABS. Specially made to save time and reduce the risk changing an existing wall nozzle, it's just necessary to do a small hole just at the beginning of the tube, clean it and glue the nozzle from the inside. Manufactured in ABS with UV treatment.

| | Code | Standard Pack | Standard weight in kg | Standard volume in m³ |
|---|---|---|---|---|
| White | 76493 | - | - | 0.020 |
| Beige | 76493CL090 | - | - | 0.020 |
| Light Grey | 76493CL129 | - | - | 0.020 |
| Anthracite Grey | 76493CL144 | - | - | 0.020 |

Complies with Standards
EN 16582-1
EN 16713-2

## Multiflow return inlet nozzle to be glued

### FOR LINER POOLS

To be glued to Ø 50 mm outer wall. Made of ABS. Specially mad to save time and reduce the risk changing an existing wall nzzle, it's just necessary to do a small hole just at the beginning of the tube, clean it and glue the nozzle from the inside. Manufactured in ABS with UV treatment.

| | Code | Standard Pack | Standard weight in kg | Standard volume in m³ |
|---|---|---|---|---|
| White | 76494 | - | - | 0.020 |
| Beige | 76494CL090 | - | - | 0.020 |
| Light Grey | 76494CL129 | - | - | 0.020 |
| Anthracite Grey | 76494CL144 | - | - | 0.020 |

Complies with Standards
EN 16582-1
EN 16713-2

## Multiflow return inlet nozzle

### FOR CONCRETE POOLS

Outer 2" thread and Ø 50 mm inner wall to be glued. Made of ABS. Recommended for installation with wall conduits: codes 15658 and 15659.

| | Code | Standard Pack | Standard weight in kg | Standard volume in m³ |
|---|---|---|---|---|
| White | 00295 | 24 | 4.35 | 0.020 |
| Beige | 00295CL090 | 24 | 4.35 | 0.020 |
| Light Grey | 00295CL129 | 24 | 4.35 | 0.020 |
| Anthracite Grey | 00295CL144 | 24 | 4.35 | 0.020 |

ABS NOZZLES

# Multiflow return inlet nozzle to be glued

Complies with Standards
EN 16582-1
EN 16713-2

## FOR CONCRETE POOLS

To be glued to Ø 63 mm PN 6 outer wall and Ø 50 mm inner wall. Made of ABS. Recommended for installation with wall conduits: code numbers 15661 and 15660.

| | Code | Standard Pack | Standard weight in kg | Standard volume in m³ |
|---|---|---|---|---|
| White | 00298 | 24 | 4.24 | 0.020 |
| Beige | 00298CL090 | 24 | 4.24 | 0.020 |
| Light Grey | 00298CL129 | 24 | 4.24 | 0.020 |
| Anthracite Grey | 00298CL144 | 24 | 4.24 | 0.020 |

# Multiflow threaded return inlet nozzle

Complies with Standards
EN 16582-1
EN 16713-2

## FOR LINER POOLS

Outer 2" thread, Ø 50mm inner. For liner pools. Comes in ABS, with gaskets and screws. Installation with bushing 15662 or 15663 is recommended (see page 152).

| | Code | Standard Pack | Standard weight in kg | Standard volume in m³ |
|---|---|---|---|---|
| White | 00330 | 12 | 4.5 | 0.020 |
| Beige | 00330CL090 | 12 | 4.5 | 0.020 |
| Light Grey | 00330CL129 | 12 | 4.5 | 0.020 |
| Anthracite Grey | 00330CL144 | 12 | 4.5 | 0.020 |

# Multiflow threaded return inlet nozzle

Complies with Standards
EN 16582-1
EN 16713-2

## FOR LINER POOLS

Outer 2" thread and Ø 50 mm inner wall to be glued. Range of inlets suitable for installation in public and private pools. Manufactured in ABS with UV treatment.

| | Code | Standard Pack | Standard weight in kg | Standard volume in m³ |
|---|---|---|---|---|
| **For liner pools, without inserts** | | | | |
| White | 17383 | 24 | 4.5 | 0.020 |
| Beige | 17383CL090 | 24 | 4.5 | 0.020 |
| Light Grey | 17383CL129 | 24 | 4.5 | 0.020 |
| Anthracite Grey | 17383CL144 | 24 | 4.5 | 0.020 |

# Multiflow threaded return inlet nozzle

Complies with Standards
EN 16582-1
EN 16713-2

## FOR POLYESTER POOLS

Outer 2" thread and Ø 50 mm inner wall to be glued. Made of ABS.

| | Code | Standard Pack | Standard weight in kg | Standard volume in m³ |
|---|---|---|---|---|
| White | 00334 | 24 | 4.61 | 0.020 |
| Beige | 00334CL090 | 24 | 4.61 | 0.020 |
| Light Grey | 00334CL129 | 24 | 4.61 | 0.020 |
| Anthracite Grey | 00334CL144 | 24 | 4.61 | 0.020 |

# Multiflow threaded return inlet nozzle

## FOR LINER POOLS

2" external thread, Ø 50 mm inner wall without inserts. (Self-tapping screws). For installation with wall conduits code 15664 or 15665 (see page 152).

Complies with Standards
EN 16582-1
EN 16713-2

| | Code | Standard Pack | Standard weight in kg | Standard volume in m³ |
|---|---|---|---|---|
| White | 06498 | 20 | 4.72 | 0.021 |

# Multiflow return inlet to be glued

## FOR CONCRETE POOLS

To be glued to a Ø 50 mm PN 10 pipe. Made of white ABS.

Complies with Standards
EN 16582-1
EN 16713-2

| | Code | Standard Pack | Standard weight in kg | Standard volume in m³ |
|---|---|---|---|---|
| White | 24413 | 40 | 4.0 | 0.020 |

# Multiflow threaded return inlet nozzle

## FOR POLYESTER POOLS

2" outer thread, 1½" inner thread. Made of white ABS. Comes with gaskets. The slots in the grille are no larger than 8 mm.

Complies with Standards
EN 16582-1
EN 16713-2

| | Code | Standard Pack | Standard weight in kg | Standard volume in m³ |
|---|---|---|---|---|
| White | 06481 | 30 | 5.1 | 0.021 |

# Multiflow return inlet nozzle

## FOR PANELS POOLS

Inlets specially designed for installation in panel pools between 10 and 15 cm thick. To be glued to a Ø 50 mm pipe. Made of white ABS. Comes with gaskets.

Complies with Standards
EN 16582-1
EN 16713-2

| | Code | Standard Pack | Standard weight in kg | Standard volume in m³ |
|---|---|---|---|---|
| White | 33091 | 8 | 3.35 | 0.021 |

# Multiflow return inlet nozzle

## FOR POLYESTER POOLS

2" external thread, Ø 50 mm inner wall to be glued.

| | Code | Standard Pack | Standard weight in kg | Standard volume in m³ |
|---|---|---|---|---|
| White | 00338 | 18 u | 5.7 | 0.021 |

Complies with Standards
EN 16582-1
EN 16713-2

# Return inlet nozzle

## threaded

## FOR POLYESTER POOLS

Threaded 1 ½" BSP. With Ø 20mm ball. The diameter of the outer wall has a smaller diameter than other models so that it fits better in curved walls.

| | Code | Standard Pack | Standard weight in kg | Standard volume in m³ |
|---|---|---|---|---|
| White | 32450 | 24 | 7.1 | 0.021 |

Complies with Standards
EN 16582-1
EN 16713-2

# Return inlet nozzle

## to be glued

## FOR CONCRETE POOLS

Manufactured in white ABS. To be glued to a Ø 50 mm PN 10 pipe. With Ø 20 mm ball.

| | Code | Standard Pack | Standard weight in kg | Standard volume in m³ |
|---|---|---|---|---|
| White | 33501 | 50 | 2.9 | 0.020 |

# Pool floor nozzle adjustable

08317

11796

08316

## DESCRIPTION

3" connection. Made of white ABS plastic. Suction. For liner and prefabricated pools comes with gaskets, flanges and screws. Flow rate adjusted by turning the grille. Suction surface area: 0.015 m². Outer Ø 295 mm wall. Flow rate (0.4 m/s) 20 m³/h. Max. recommended flow rate compliant with standard EN 13451-1: 26 m³/h (0.5 m/s.).

## FOR CONCRETE POOLS

| | Code | Standard Pack | Standard weight in kg | Standard volume in m³ |
|---|---|---|---|---|
| Grille in AISI-304 stainless steel | 08317 | 2 | 2.65 | 0.047 |
| Grille in white ABS | 11796 | 2 | 2.65 | 0.047 |

## FOR LINER POOLS

| | Code | Standard Pack | Standard weight in kg | Standard volume in m³ |
|---|---|---|---|---|
| Grille in AISI-304 Stainless Steel | 08316 | 2 | 2.65 | 0.047 |
| Grille in white ABS | 11795 | 2 | 2.65 | 0.047 |

# Pool floor nozzle

## to be glued

76500

76500CL090

76500CL129

76500CL144

Complies with Standards
EN 16582-1
EN 16713-2

## FOR LINER POOLS

Return nozzle with improved performance. To be glued to Ø 50 mm inner wall or Ø 63 PN6 pipe outer wall. Comes with gaskets, flanges and screws. Adjustable flow rate. Max. flow rate: 12 m³/h. Compliant with standard EN 13451-3. Recommended installation with code 43590.

| | Code | Standard Pack | Standard weight in kg | Standard volume in m³ |
|---|---|---|---|---|
| White | 76500 | - | - | 0.020 |
| Beige | 76500CL090 | - | - | 0.020 |
| Light Grey | 76500CL129 | - | - | 0.020 |
| Anthracite Grey | 76500CL144 | - | - | 0.020 |

# Pool floor nozzle

00303

00303CL090

00303CL129

00303CL144

Complies with Standards
EN 16582-1
EN 16713-2

## FOR CONCRETE POOLS

All-in-one return inlet and suction nozzle. Adjustable flow rate. Made of ABS plastic and screws in stainless steel. Maximum recommended flow rate compliant with standard EN 13451-1. 12 m³/h.

| | Code | Standard Pack | Standard weight in kg | Standard volume in m³ |
|---|---|---|---|---|
| **Outer 2" thread, int. Ø 50 mm** | | | | |
| White | 00303 | 24 | 5.0 | 0.020 |
| Beige | 00303CL090 | 24 | 5.0 | 0.020 |
| Light Grey | 00303CL129 | 24 | 5.0 | 0.020 |
| Anthracite Grey | 00303CL144 | 24 | 5.0 | 0.020 |
| **To glue onto Ø 63 mm PN 6, inner Ø 50 mm** | | | | |
| White | 20140 | 20 | 4.4 | 0.021 |

# Pool floor nozzle

00340

00340CL090

00340CL129

00340CL144

Complies with Standards
EN 16582-1
EN 16713-2

## FOR LINER POOLS

2" outer thread and internal Ø 50 mm. Return nozzle. Comes with gaskets, flanges and screws. Adjustable flow rate. Max. flow rate: 12 m³/h.

| | Code | Standard Pack | Standard weight in kg | Standard volume in m³ |
|---|---|---|---|---|
| White | 00340 | 12 | 5.4 | 0.020 |
| Beige | 00340CL090 | 12 | 5.4 | 0.020 |
| Light Grey | 00340CL129 | 12 | 5.4 | 0.020 |
| Anthracite Grey | 00340CL144 | 12 | 5.4 | 0.020 |

# Pool floor nozzle with swivel joint

22353

22353CL090

22353CL129

22353CL144

Complies with Standards
EN 16582-1
EN 16713-2

## FOR CONCRETE POOLS

Swivel body in PVC. Cover in ABS. Adjuster screw in POM. Maximum flow rate of 10 m³/h. Fits to Ø 75 mm piping and wall conduit with code number 21248.

| | Code | Standard Pack | Standard weight in kg | Standard volume in m³ |
|---|---|---|---|---|
| White | 22353 | 24 | 4.1 | 0.022 |
| Beige | 22353CL090 | 24 | 4.1 | 0.022 |
| Light Grey | 22353CL129 | 24 | 4.1 | 0.022 |
| Anthracite Grey | 22353CL144 | 24 | 4.1 | 0.022 |

# BCN03 pool floor nozzle

Complies with Standards
EN 16582-1
EN 16713-2

## FOR LINER POOLS

Adjustable pool floor return inlet for liner pools. Designed to be glued to the inside of PN6 and PN10 piping. Ø 63 mm. Made of white ABS, with self-tapping screws or with metal inserts. Plastic or stainless steel flange, depending on the model. Maximum flow rate: 9.5 m³/h.

| | Code | Standard Pack | Standard weight in kg | Standard volume in m³ |
|---|---|---|---|---|
| PN6, with inserts | 28231 | 12 | 3.55 | 0.031 |
| PN10, with inserts and stainless steel flange | 28502 | 12 | 4.54 | 0.031 |

# BCN03 adjustable pool floor nozzle

Complies with Standards
EN 16582-1
EN 16713-2

## FOR LINER POOLS

Pool floor return inlet for liner pools. Thanks to the adjustable feature, its installation in the pool floor is made extremely easy as it can be fitted after the concrete has been laid with wall conduit 43590.

| | Code | Standard Pack | Standard weight in kg | Standard volume in m³ |
|---|---|---|---|---|
| With plastic flange inserts | 43586 | 12 | 2.04 | 0.033 |
| Plastic self-tapping flange | 43587 | 12 | 2.04 | 0.033 |
| With stainless steel flange inserts | 43588 | 12 | 2.04 | 0.033 |
| Self-tapping stainless steel flange | 43589 | 12 | 2.04 | 0.033 |

# Return inlet/suction nozzle

## for high flow rates

Complies with Standards
EN 16582-1
EN 16713-2

## FOR CONCRETE POOLS

Return inlet for large flow rates that can also be used as a suction nozzle. Maximum return flow rate of 30m³/h for a maximum flow rate speed of 4 m/s. Maximum suction flow rate of 5 m³/h for a maximum flow rate speed of 0.5 m/s. PVC body. Connection for Ø 75 or Ø 90mm pipe. Inlets can be installed into bushing 43590 (see page 143). Grille can be adjusted in any direction.

| | Code | Standard Pack | Standard weight in kg | Standard volume in m³ |
|---|---|---|---|---|
| White | 41520 | 16 | 4.20 | 0.021 |

# Return inlet/suction nozzle

## for high flow rates

Complies with Standards
EN 16582-1
EN 16713-2

## FOR LINER POOLS

Return inlet for large flow rates that can also be used as a suction nozzle. Maximum suction flow rate of 30m³/h for a maximum flow rate speed of 4 m/s. Maximum suction flow rate of 5 m³/h for a maximum flow rate speed of 0.5 m/s. PVC body. Connection for Ø 75 or Ø 90 mm pipe. Inlets can be installed into bushing 43590 (see page 143). Grille can be adjusted in any direction.

| | Code | Standard Pack | Standard weight in kg | Standard volume in m³ |
|---|---|---|---|---|
| Panel pools | 41518 | 10 | 5.50 | 0.021 |
| Liner pools | 41521 | 12 | 4.20 | 0.021 |

ABS NOZZLES

# Suction nozzle

Complies with Standards
EN 16582-1
EN 16713-2

## FOR CONCRETE POOLS

To be glued to Ø 63 mm and Ø 50 mm piping. Maximum pressure: 6 bar. Made of ABS. 1½" threaded plug. Recommended for installation with wall conduits: code numbers 15661 and 15660.

| | Code | Standard Pack | Standard weight in kg | Standard volume in m³ |
|---|---|---|---|---|
| White | 00300 | 24 | 3.62 | 0.020 |
| Beige | 00300CL090 | 24 | 3.62 | 0.020 |
| Light Grey | 00300CL129 | 24 | 3.62 | 0.020 |
| Anthrachite Grey | 00300CL144 | 24 | 3.62 | 0.020 |

# Suction nozzle

Complies with Standards
EN 16582-1
EN 16713-2

## FOR CONCRETE POOLS

Outer 2" thread, Ø 50 mm inner wall. Maximum pressure: 6 bar. Made of white ABS with 1½" threaded plug. Recommended for installation with wall conduits (codes 15658 and 15659).

| | Code | Standard Pack | Standard weight in kg | Standard volume in m³ |
|---|---|---|---|---|
| White | 00301 | 24 | 3.8 | 0.020 |

# Suction nozzle

Complies with Standards
EN 16582-1
EN 16713-2

## FOR CONCRETE POOLS

To be glued to a Ø 50 PN 10 pipe. Made of white ABS with 1½" threaded plug. For end connector 07958 and push fit connector 01393. Recommended for installation with wall conduits (codes 15658 and 15659).

| | Code | Standard Pack | Standard weight in kg | Standard volume in m³ |
|---|---|---|---|---|
| White | 24415 | 50 | 3.72 | 0.02 |

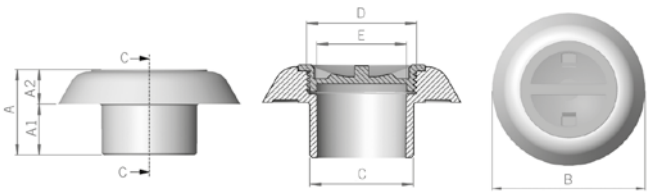

# Suction nozzle

Complies with Standards
EN 16582-1
EN 16713-2

## FOR POLYESTER POOLS

2" outer thread, 1½" inner thread. Made of white ABS.

| | Code | Standard Pack | Standard weight in kg | Standard volume in m³ |
|---|---|---|---|---|
| White | 06484 | 30 | 4.3 | 0.021 |

# Suction nozzle

## FOR CONCRETE POOLS

To be glued to a Ø 63 mm pipe. Body and grille in ABS plastic, screws in stainless steel. Application on wall. Its characteristics make this nozzle particularly suitable for overflow channels. Maximum flow rate: 4.5 m³/h.

| | Code | Standard Pack | Standard weight in kg | Standard volume in m³ |
|---|---|---|---|---|
| White | 00302 | 12 | 3.1 | 0.016 |

# Suction nozzle

00332

00332CL090

00332CL129

00332CL144

Complies with Standards
EN 16582-1
EN 16713-2

## FOR LINER POOLS

Outer 2" thread, internal Ø 50 mm. Made of white ABS. Comes with plug, gaskets and screws. Recommended for installation with wall conduit 15663.

| | Code | Standard Pack | Standard weight in kg | Standard volume in m³ |
|---|---|---|---|---|
| **Standard return inlet** | | | | |
| White | 00332 | 12 | 4.22 | 0.020 |
| Beige | 00332CL090 | 12 | 5.4 | 0.020 |
| Light Grey | 00332CL129 | 12 | 5.4 | 0.020 |
| Anthracite Grey | 00332CL144 | 12 | 5.4 | 0.020 |

ABS NOZZLES

# Suction nozzle

Complies with Standards
EN 16582-1
EN 16713-2

## FOR POLYESTER POOLS

Outer 2" thread, Ø 50 mm inner wall. For prefabricated pools. Made of ABS. Comes with 1½" threaded plug.

| | Code | Standard Pack | Standard weight in kg | Standard volume in m³ |
|---|---|---|---|---|
| White | 00336 | 24 | 4.13 | 0.020 |
| Beige | 00336CL090 | 24 | 4.13 | 0.020 |
| Light Grey | 00336CL129 | 24 | 4.13 | 0.020 |
| Anthracite Grey | 00336CL144 | 24 | 4.13 | 0.020 |

# Suction nozzle

Complies with Standards
EN 16582-1
EN 16713-2

## FOR LINER POOLS

Made of ABS. Comes with gaskets, flanges and screws. Connections: outer 2" thread and Ø 50 mm inner.

| | Code | Standard Pack | Standard weight in kg | Standard volume in m³ |
|---|---|---|---|---|
| White | 17382 | 20 | 6.0 | 0.020 |
| Beige | 17382CL090 | 20 | 6.0 | 0.020 |
| Light Grey | 17382CL129 | 20 | 6.0 | 0.020 |
| Anthracite Grey | 17382CL144 | 20 | 6.0 | 0.020 |

# Suction nozzle

Complies with Standards
EN 16582-1
EN 16713-2

## FOR PANELS POOLS

For installation in panel pools between 10 and 15 cm thick. Comes with gaskets. Connections: To be glued to Ø 50 mm piping and 1½" BSP thread.

| | Code | Standard Pack | Standard weight in kg | Standard volume in m³ |
|---|---|---|---|---|
| White | 33092 | 8 | 3.35 | 0.021 |

# Return inlet nozzle

## FOR CONCRETE POOLS

In weatherproof, UV-resistant ABS. 3 adjustable positions. (100%, 65%, 35%). Maximum recommended flow rate compliant with standard EN 13451-1: 13.5 m³/h. Connection: outer Ø 63 mm wall.

Complies with Standards
EN 16582-1
EN 16713-2

| | Code | Standard Pack | Standard weight in kg | Standard volume in m³ |
|---|---|---|---|---|
| White | 15863 | 24 | 3.4 | 0.020 |

# Return inlet nozzle adjustable

## FOR LINER POOLS

Comes with gaskets, flange and screws. 3 adjustable positions: (100%, 65%, 35%). Flow rate: 13.5 m³/h. Outer Ø 63 mm connection.

Complies with Standards
EN 16582-1
EN 16713-2

| | Code | Standard Pack | Standard weight in kg | Standard volume in m³ |
|---|---|---|---|---|
| White | 15864 | 12 | 4.2 | 0.02 |

# Air impulsion inlet nozzle adjustable

## FOR LINER AND POLYESTER POOLS

For air distribution by means of the blowers. Maximum flow rate 18 m³/h.

| | Code | Standard Pack | Standard weight in kg | Standard volume in m³ |
|---|---|---|---|---|
| White | 49818 | 12 | 4.24 | 0.021 |

# Return inlet nozzle

74121

74121CL090

74121CL129

74121CL144

## FOR POLYESTER POOLS

Suction nozzle specially designed for polyester pools. Nozzle that should be installed in the wall of the pool in the deepest area of the pool. Installation with 2" thread, gasket and nut. Made of ABS. Flow rate : 6m³/h.

| | Code | Standard Pack | Standard weight in kg | Standard volume in m³ |
|---|---|---|---|---|
| White | 74121 | 24 | 4.5 | 0.021 |
| Beige | 74121CL090 | 24 | 4.5 | 0.021 |
| Light Grey | 74121CL129 | 24 | 4.5 | 0.021 |
| Anthracite grey | 74121CL144 | 24 | 4.5 | 0.021 |

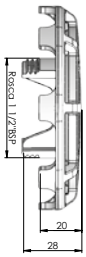


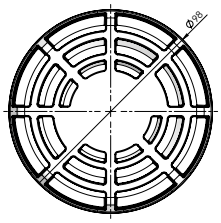

ABS NOZZLES

# Hydromassage kit

## DESCRIPTION

Made up of a return inlet and wall conduit fitted with an air inlet and a venturi. Two wall conduit lengths available. Ø 50 mm water connection pipe and Ø 20 mm air suction pipe.

## FOR CONCRETE POOLS

| | Code | Standard Pack | Standard weight in kg | Standard volume in m³ |
|---|---|---|---|---|
| **Hydromassage kit for concrete pools: Length of wall conduit 190 mm** | | | | |
| White | 32113 | 12 | 3.5 | 0.021 |
| **Length of wall conduit 280 mm** | | | | |
| White | 32370 | 12 | 3.6 | 0.021 |
| **Hydromassage kit for concrete pools with a liner: Length of wall conduit 190 mm** | | | | |
| White | 31443 | 12 | 3.5 | 0.021 |
| **Length of wall conduit 275 mm** | | | | |
| White | 32371 | 8 | 3.5 | 0.021 |

## FOR LINER AND POLYESTER POOLS

| | Code | Standard Pack | Standard weight in kg | Standard volume in m³ |
|---|---|---|---|---|
| **Hydromassage kit for prefabricated polyester pools: Length of wall conduit 190 mm** | | | | |
| White | 32114 | 12 | 3.5 | 0.021 |
| **Length of wall conduit 275 mm** | | | | |
| White | 32384 | 10 | 3.4 | 0.021 |
| **Hydromassage kit for prefabricated pools with liner: Length of wall conduit 190 mm** | | | | |
| White | 32115 | 12 | 3.5 | 0.021 |
| **Length of wall conduit 275 mm** | | | | |
| White | 32385 | 8 | 3.5 | 0.021 |

ABS NOZZLES

# Wall conduit for pool floor return

## inlet nozzle with swivel joint (Net'n'Clean reduction piping)

### DESCRIPTION

Diameter of the piping adjusted to glue in inlet 22353. Connection to piping for Ø 50 mm inner wall and Ø 63 mm outer wall.

| | Code | Standard Pack | Standard weight in kg | Standard volume in m³ |
|---|---|---|---|---|
| | 21248 | 12 | 7.3 | 0.032 |

# Ø 90 mm wall conduit

### DESCRIPTION

PVC wall conduit. Cutting area of 120 mm for fitting it to the pool wall or floor. Ø 63 or Ø 75 connection, as required.

For inlets:
BCN 03: 43586 - 43587 - 43588 - 43589
Return inlet/suction nozzle for high flow rates: 41518 - 41520 - 41521

| | Code | Standard Pack | Standard weight in kg | Standard volume in m³ |
|---|---|---|---|---|
| Ø 90/Ø 63-Ø 75 mm wall conduit | 43590 | 9 | 7.3 | 0.033 |

# Double gasket kit

### FOR LINER AND PREFABRICATED POOLS

Kit made up of a double gasket and the screws necessary for the installation of nozzles in panel pools. Made of TPE, the kit enables the installation of various accessories in pool shells and protects the panelling from coming into contact with water. Easy to install. Prevents corrosion of the panelling in the area that has been die cut.

We recommend to place this Kit on panel pools of metal sheet in nozzles 00330; 00332; 17382; 17383 and 56499.

| | Code | Standard Pack | Standard weight in kg | Standard volume in m³ |
|---|---|---|---|---|
| Inserts for nozzles | 43455-0500 | 80 | - | 0.035 |

STAINLESS STEEL NOZZLES

# STYLE return inlet nozzle

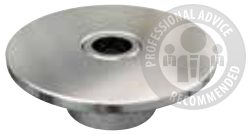

Complies with Standards
EN 16582-1
EN 16713-2

## FOR CONCRETE POOLS

Range of return inlet nozzles manufactured in full SS AISI-316L suitable with concrete and prefabricated pools (together with liner kit).

These inlet nozzles can be installed in any bushing with 1-1/2" BSP thread.

Compatible with the interchangeable equipment.

Recommended flow rate for a max of 4 m/s:

- Ø20 mm: 4.5 $m^3$/h *According with EN standards if installed at a maximum of 500mm below pool water level
- Ø25 mm: 7 $m^3$/h
- 4 x Ø7.8 mm: 2.9 $m^3$/h

| | Code | Standard Pack | Standard weight in kg | Standard volume in $m^3$ |
|---|---|---|---|---|
| Round - Ball 20mm - L35mm | 75164 | 1 | 0.325 | 0.001 |
| Round - Ball 20mm - L50mm | 75165 | 1 | 0.415 | 0.001 |
| Round - Ball 25mm - L35mm | 75166 | 1 | 0.295 | 0.001 |
| Round - Ball 25mm - L50mm | 75167 | 1 | 0.385 | 0.001 |
| Round Ball 4 x 7.8mm - L35mm | 75168 | 1 | 0.305 | 0.001 |
| Round Ball 4 x 7.8mm - L50mm | 75169 | 1 | 0.395 | 0.001 |
| Square - Ball 20mm - L35mm | 75170 | 1 | 0.325 | 0.001 |
| Square - Ball 20mm - L50mm | 75171 | 1 | 0.415 | 0.001 |
| Square - Ball 25mm - L35mm | 75172 | 1 | 0.295 | 0.001 |
| Square - Ball 25mm - L50mm | 75173 | 1 | 0.385 | 0.001 |
| Square - Ball 4 x 7.8mm - L35mm | 75174 | 1 | 0.305 | 0.001 |
| Square - Ball 4 x 7.8mm - L50mm | 75175 | 1 | 0.395 | 0.001 |

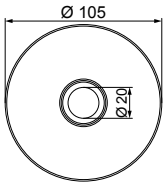


75164 (L35mm)

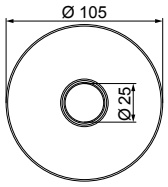


75166 (L35mm)

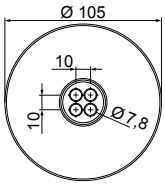


75168 (L35mm)

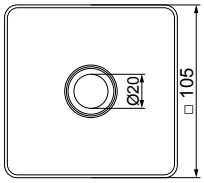


75170 (L35mm)

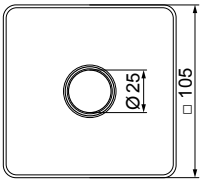


75172 (L35mm)

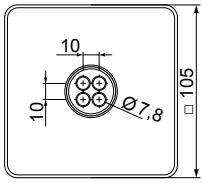


75174 (L35mm)

# STYLE suction nozzle

## FOR CONCRETE POOLS

Range of suction inlet nozzles manufactured in full SS AISI-316L suitable with concrete and prefabricated pools (together with liner kit). These inlet nozzles can be installed in any bushing with 1-½" BSP thread. With cover.

Compatible with the interchangeable equipment.

Pushing-fit connection 05684 required (see page 420).

| | Code | Standard Pack | Standard weight in kg | Standard volume in m³ |
|---|---|---|---|---|
| Round - L35mm | 75176 | 1 | 0.34 | 0.001 |
| Square - L35mm | 75177 | 1 | 0.35 | 0.001 |

Complies with Standards
EN 16582-1
EN 16713-2

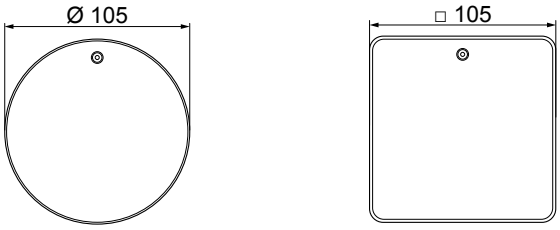


75176 75177

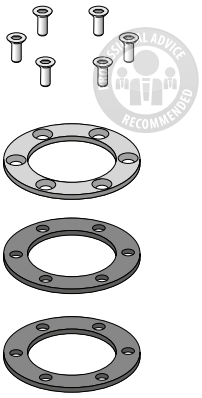

# STYLE liner adaptors

## FOR LINER POOLS

For use only with nozzles with connection length 35mm.

| | Code | Standard Pack | Standard weight in kg | Standard volume in m³ |
|---|---|---|---|---|
| Liner adaptor | 75178 | 1 | 0.115 | 0.001 |
| Liner adaptor for interchangeable | 75179 | 1 | 0.120 | 0.001 |

Complies with Standards
EN 16582-1
EN 16713-2

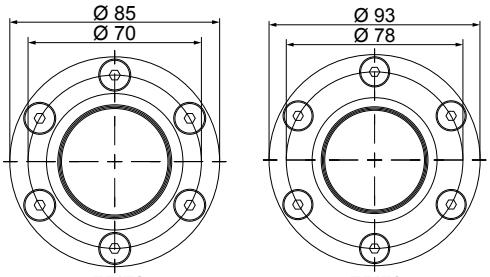


75178 75179

**LINER APPLICATIONS**

# Return inlet nozzle with Ø 20 mm ball

## FOR CONCRETE POOLS

1½" external thread. Manufactured in AISI-316L stainless steel. Maximum recommended flow of 4.5 m³/hour according to EN 16582-1 and EN 16713-2 standards if installed at a maximum of 500 mm below pool water level. Ø 20mm ball.

Complies with Standards
EN 16582-1
EN 16713-2

| | Code | Standard Pack | Standard weight in kg | Standard volume in m³ |
|---|---|---|---|---|
| Length 35 mm | 32994 | 1 | 0.3 | 0.001 |
| Length 50 mm | 16325 | 1 | 0.3 | 0.001 |
| Length 70 mm | 16326 | 1 | 0.5 | 0.001 |

# Return inlet nozzle

## with Ø20 ball for liner pool

## FOR LINER AND PREFABRICATED POOLS

1½" external thread. Manufactured in AISI-316L stainless steel. Ø 20 mm ball. Comes with gaskets and screws. Maximum recommended flow of 4.5 m³/hour according to EN 16582-1 and EN16713-2 standards if installed at a maximum of 500 mm below pool water level.

Complies with Standards
EN 16582-1
EN 16713-2

| | Code | Standard Pack | Standard weight in kg | Standard volume in m³ |
|---|---|---|---|---|
| | 16327 | 1 | 0.5 | 0.001 |

# Brushing return inlet nozzle

## with Ø20 ball for liner pool

## FOR LINER AND PREFABRICATED POOLS

Manufactured in AISI-316L stainless steel. Fits to 00344 and 00345 bushings and adapts to converter 26171. Comes with gaskets and screws. Install at a maximum of 500 mm below water level. Ball fitted using screws. Recommended flow rate: 4.5 m³/h.

Complies with Standards
EN 16582-1
EN 16713-2

| | Code | Standard Pack | Standard weight in kg | Standard volume in m³ |
|---|---|---|---|---|
| | 16331 | 1 | 0.3 | 0.001 |

# Return inlet nozzle with Ø 25 mm ball

## FOR CONCRETE POOLS

1½" external thread. Manufactured in AISI-316L stainless steel. Maximum recommended flow according to EN 13451-3 standard: 7 m³/h. Ø 25 mm ball.

Complies with Standard EN 13451-1-3

Complies with Standards EN 16582-1 EN 16713-2

| | Code | Standard Pack | Standard weight in kg | Standard volume in m³ |
|---|---|---|---|---|
| Length 35 mm | 69874 | 1 | 0.3 | 0.001 |
| Length 50 mm | 69875 | 1 | 0.3 | 0.001 |
| Length 70 mm | 69876 | 1 | 0.5 | 0.001 |

# Return inlet nozzle

## with Ø25 ball for liner pool

## FOR LINER AND PREFABRICATED POOLS

1½" external thread. Manufactured in AISI-316L stainless steel. Ø 25 mm ball. Comes with gaskets and screws. Recommended flow rate: 7 m³/h.

Complies with Standard EN 13451-1-3

Complies with Standards EN 16582-1 EN 16713-2

| | Code | Standard Pack | Standard weight in kg | Standard volume in m³ |
|---|---|---|---|---|
| | 69877 | 1 | 0.5 | 0.001 |

# Bushing return inlet nozzle

## with Ø25 ball for liner pool

## FOR LINER AND PREFABRICATED POOLS

Manufactured in AISI-316L stainless steel. Fits to 00344 and 00345 bushings and adapts to converter 26171. Comes with gaskets and screws. Ball fitted using screws. Recommended flow rate: 7 m³/h.

Complies with Standard EN 13451-1-3

Complies with Standards EN 16582-1 EN 16713-2

| | Code | Standard Pack | Standard weight in kg | Standard volume in m³ |
|---|---|---|---|---|
| | 69878 | 1 | 0.3 | 0.001 |

# Adjustable return inlet nozzle

## FOR CONCRETE POOLS

Manufactured in chrome-plated brass. Grille in AISI-304L stainless steel.

Complies with Standard EN 13451-1-3

Complies with Standards EN 16582-1 EN 16713-2

| | Code | Standard Pack | Standard weight in kg | Standard volume in m³ |
|---|---|---|---|---|
| Max. flow rate: 21 m³/h 2" inner thread | 00312 | 12 | 7.0 | 0.013 |
| Max. flow rate: 40 m³/h 3" inner thread | 00313 | 6 | 10.0 | 0.014 |

# Adjustable pool floor return inlet nozzle

## DESCRIPTION

2" external thread. Made of AISI-316L stainless steel. Can be fitted in concrete and prefabricated pools. The water flow can be adjusted by loosening or tightening the central screw. Max. recommended flow rate complaint with standard EN 13451-3: 14 m³/h.

Complies with Standard EN 13451-1-3

Complies with Standards EN 16582-1 EN 16713-2

| | Code | Standard Pack | Standard weight in kg | Standard volume in m³ |
|---|---|---|---|---|
| | 15839 | 1 | 0.9 | 0.002 |

# Suction nozzle

## FOR CONCRETE POOLS

1½" external thread. Manufactured in AISI-316L stainless steel. Push-fit connection 05684 required (see page 420).

Complies with Standard EN 13451-1-3

Complies with Standards EN 16582-1 EN 16713-2

| | Code | Standard Pack | Standard weight in kg | Standard volume in m³ |
|---|---|---|---|---|
| Length 50 mm | 16328 | 1 | 0.2 | 0.001 |
| Length with cover: 50 mm | 21644 | 1 | 0.3 | 0.001 |

# Suction nozzle with sliding cover

## FOR CONCRETE POOLS

Manufactured in chrome-plated brass. Faceplate in AISI-304L stainless steel. Pressure connection, 2" internal thread. Sleeve 01392 is needed (see page 420). couples to hose.

Complies with Standard EN 13451-1-3

Complies with Standards EN 16582-1 EN 16713-2

| | Code | Standard Pack | Standard weight in kg | Standard volume in m³ |
|---|---|---|---|---|
| | 00315 | 12 | 8.0 | 0.008 |

# Suction nozzle with threaded cover

## FOR CONCRETE POOLS

Made of chrome plated brass. Screws into 2" inner thread (01395 coupling is required for hose).

Complies with Standard EN 13451-1-3

Complies with Standards EN 16582-1 EN 16713-2

| Code | Standard Pack | Standard weight in kg | Standard volume in m³ |
|---|---|---|---|
| 00317 | 12 | 10.0 | 0.012 |

# Suction nozzle for liner pools

## FOR LINER AND PREFABRICATED POOLS

In AISI-316L stainless steel. Comes with sealing gaskets, flange and screws. With 1½" outer thread. Push-fit connection 06584 is needed.

Complies with Standard EN 13451-1-3

Complies with Standards EN 16582-1 EN 16713-2

| Code | Standard Pack | Standard weight in kg | Standard volume in m³ |
|---|---|---|---|
| 16330 | 1 | 0.5 | 0.001 |

# Adapter for pool wall conduits

## DESCRIPTION

1½" external thread. Manufactured in AISI-316L stainless steel. For adapting concrete pool bushings to prefabricated pool ones. Must be used with stainless steel inlet 16331, 69878.

Complies with Standard EN 13451-1-3

Complies with Standards EN 16582-1 EN 16713-2

| Code | Standard Pack | Standard weight in kg | Standard volume in m³ |
|---|---|---|---|
| 26171 | 1 | 0.2 | 0.001 |

69172

74525

# Embellisher for inlets in stainless steel

## DESCRIPTION

AISI-316L embellishers for ABS inlets. Includes flange, screws and gaskets.

| | Code | Standard Pack | Standard weight in kg | Standard volume in m³ |
|---|---|---|---|---|
| **Compatible with:** | | | | |
| ABS return inlet items 00330 and 56499 | 69171 | 1 | 0.31 | 0.001 |
| ABS suction inlet item 00332 | 69172 | 1 | 0.41 | 0.001 |
| ABS return inlet code 56499 and 00330 | 74525 | 1 | 0.38 | 0.001 |

# Connection boxes

75971CL090

75971

75971CL144

75971CL129

## UNIK connection box

### DESCRIPTION

Manufactured in ABS, with a cover designed to be integrated in the pool surroundings.

Compatible to install in a Ø50 tube or hose.

All threaded connections are M-25.

| | Code | Standard Pack | Standard weight in kg | Standard volume in m³ |
|---|---|---|---|---|
| White | 75971 | 8 | 4.65 | 0 030 |
| Beige | 75971CL090 | 8 | 4.65 | 0 030 |
| Light Grey | 75971CL129 | 8 | 4.65 | 0 030 |
| Anthracite | 75971CL144 | 8 | 4.65 | 0 030 |

# Interchangeable

## pool basin equipment

### FOR LINER AND PREFABRICATED POOLS

Bushing, return inlet, suction nozzle, flange assembly to be installed in concrete, prefabricated and liner pools The measurements of each item make it possible to interchange them with the stainless steel sets. The inlets can be installed in any bushing with a 1½" BSP thread. There is a flange set to install the inlets in pools with a liner. All items mainly made in plastic (ABS), except screws and gaskets. Each item can be assembled with the stainless steel sets. Interchangeable stainless steel/plastic codes.

| | Code | Standard Pack | Standard weight in kg | Standard volume in m³ |
|---|---|---|---|---|
| S. S. interchangeable return inlet | 49758 | 1 | 0.33 | 0.021 |
| **ABS interchangeable return inlet** | | | | |
| White | 49754 | 50 u | 4.84 | 0.021 |
| Beige | 49754CL090 | 50 u | 4.84 | 0.021 |
| Light grey | 49754CL129 | 50 u | 4.84 | 0.021 |
| Anthracite grey | 49754CL144 | 50 u | 4.84 | 0.021 |
| ABS interchangeable return inlet circular vent | 52681 | 50 | 4.84 | 0.021 |
| Stainless Steel interchangeable suction nozzle | 49759 | 1 | 0.16 | 0.021 |
| Kit Base and nut - Connection to the base Ø50 mm, 2 "nut | 74179 | 24 u | 4.61 | 0.021 |
| **ABS interchangeable suction nozzle** | | | | |
| White | 72672 | 50 u | 4.84 | 0.021 |
| Beige | 72672CL090 | 50 u | 4.84 | 0.021 |
| Light grey | 72672CL129 | 50 u | 4.84 | 0.021 |
| Anthracite grey | 72672CL144 | 50 u | 4.84 | 0.021 |
| S. S. interchangeable flange inlet set | 49760 | 1 | 0.16 | 0.021 |
| ABS interchangeable flange inlet set | 49756 | 50 u | 4.84 | 0.021 |
| Interchangeable bushing inlet set S. S. for threading | 49761 | 1 | 0.70 | 0.021 |
| Interchangeable bushing inlet set ABS for threading | 49757 | 9 | 2.93 | 0.021 |
| Interchangeable bushing inlet set ABS for gluing | 49832 | 9 | 2.93 | 0.021 |

| | | | | | | |
|---|---|---|---|---|---|---|
| | | Return nozzle | Suction nozzle | Flange | Wall conduits |
| Stainless Steel | - | 49758 | 49759 | 49760 | 49761 |
| ABS | 74179 | 49754<br>52681* | 72672 | 49756 | 49757<br>49832** |

* Circular vent ** To glue

# Wall conduits in ABS

## FOR CONCRETE POOLS

Range of 300 mm long conduits for Ø 2" inlets and Multiflow that can be cut to different lengths, depending on the thickness of the pool wall. Made of ABS. The ribs of the end plates have holes for fitting the wall conduit to the pool structure, which makes assembly straightforward.

| | Code | Standard Pack | Standard weight in kg | Standard volume in m³ |
|---|---|---|---|---|
| **Wall conduit in ABS with 2" rear male thread and Ø 50 mm smooth inner wall** | | | | |
| 2" front female thread nozzles | 15658 | 15 | 4.3 | 0.040 |
| Smooth Ø 59.3 mm front connection for nozzles to be glued to Ø 63 mm piping, 6-bar piping and MINI projector (33684) | 15661 | 15 | 4.2 | 0.040 |
| **Wall conduit in ABS with smooth Ø 63 mm rear connection and smooth Ø 50 mm inner wall** | | | | |
| 2" front female thread nozzles | 15659 | 15 | 4.2 | 0.040 |
| Smooth Ø 59.3 mm front connection for nozzles to be glued to Ø 63 mm piping, 6-bar piping and MINI projector (33684) | 15660 | 15 | 5.6 | 0.040 |

# Wall conduits in ABS

## FOR LINER AND PREFABRICATED POOLS

Range of 300 mm long conduits for Ø 2" inlets and Multiflow that can be cut to different lengths, depending on the thickness of the pool wall. Made of ABS. The ribs of the end plates have holes for fitting the wall conduit to the pool structure, which makes assembly straightforward. The inlet's end plate ensures that it fits flush to the pool wall so that the liner remains flat against the wall and does not swell. This system is aesthetically pleasing as only the face plate can be seen.

| | Code | Standard Pack | Standard weight in kg | Standard volume in m³ |
|---|---|---|---|---|
| **Wall conduit with 2" rear male thread and Ø 50 mm smooth inner wall** | | | | |
| 2" front female thread for nozzles with 2" male thread | 15663 | 12 | 4.0 | 0.040 |
| 2" front female thread for nozzle with code number 06498 only | 15664 | 14 | 4.2 | 0.040 |
| **Wall conduit with smooth Ø 63 mm rear connection and smooth Ø 50 mm inner wall** | | | | |
| 2" front female thread for nozzles with 2" male thread | 15662 | 12 | 5.0 | 0.040 |
| 2" front female thread for nozzle 06498 only | 15665 | 14 | 5.4 | 0.040 |

# Wall conduits in PVC

## FOR ALL TYPES OF POOLS

| | Code | Standard Pack | Standard weight in kg | Standard volume in m³ |
|---|---|---|---|---|
| **Wall conduit in Grey PVC. 150 mm long** 2" outer thread + Ø 50 mm inner, 2" inner thread | 00322 | 40 | 8.2 | 0.040 |
| **Wall conduit in Grey PVC. 300 mm long** 2" female and male thread connection | 00323 | 20 | 8.9 | 0.040 |
| 2" rear male thread pipe connection or smooth inner wall for MINI projector (33684) | 00324 | 20 | 8.5 | 0.040 |
| 2" outer thread + Ø 50 mm inner, 1½" inner thread | 00325 | 20 | 8.4 | 0.040 |
| 2" outer thread + Ø 50 mm inner wall, Ø 50 mm inner wall specially for nozzles 00289, 07957, 00304, 00305 and 00306 | 00326 | 20 | 8.4 | 0.040 |

# Wall conduits in Stainless Steel

## FOR CONCRETE POOLS

Wall conduit in AISI-304L S.S. Both ends with 1½" inner thread. With earth connection.

| | Code | Standard Pack | Standard weight in kg | Standard volume in m³ |
|---|---|---|---|---|
| Length 240 mm | 00327 | 1 | 0.7 | 0.003 |
| Length 340 mm | 00328 | 1 | 0.8 | 0.005 |

# Wall conduits in Stainless Steel

## FOR LINER AND PREFABRICATED POOLS

Made in stainless steel. AISI-304L. Both ends have a 1½" female thread. With an equipotential outlet. For inlet 16331 (see page 147).

| | Code | Standard Pack | Standard weight in kg | Standard volume in m³ |
|---|---|---|---|---|
| Length 240 mm | 00344 | 1 | 0.7 | 0.003 |
| Length 340 mm | 00345 | 1 | 0.9 | 0.005 |

# Pool shell equipment packs

## DESCRIPTION

Pack made up of: 2 skimmers, 3 multiflow return inlets, 1 suction nozzle, 1 round main drain.

| | Code | Standard Pack | Standard weight in kg | Standard volume in m³ |
|---|---|---|---|---|
| Pack for concrete pools | 74349 | 1 | 5.20 | 0.074 |
| Pack for liner pools | 74350 | 1 | 10.78 | 0.158 |

| | | | | |
|---|---|---|---|---|
| **Pack for concrete pools**<br>Contains the following products: | | | | |
| | 00249 x 2 | 56379 x 1 | 24413 x 3 | 24415 x 1 |
| **Pack for liner pools**<br>Contains the following products: | | | | |
| | 01464 x 2 | 56382 x 1 | 00330 x 3 | 00332 x 1 |

# Winter plugs

## FOR ALL TYPES OF POOLS

| | Code | Standard Pack | Standard weight in kg | Standard volume in $m^3$ |
|---|---|---|---|---|
| For protect from freezing | | | | |
| For covering 1½" inlets | 53849 | - | - | - |
| For covering 2" inlets | 06212 | - | - | - |

# Installation diagrams

## INSTALLATION DIAGRAMS

### Skimmer installation

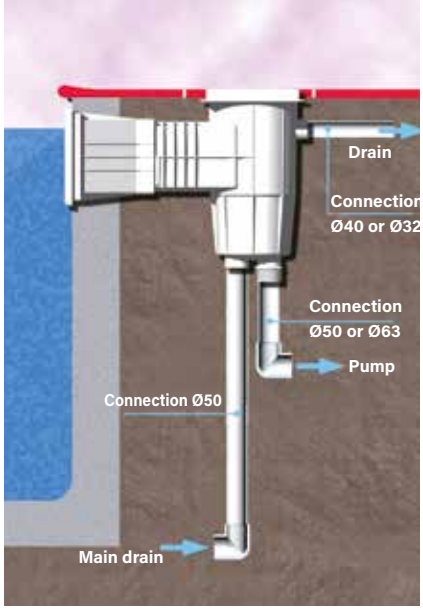


### Water level regulator installation

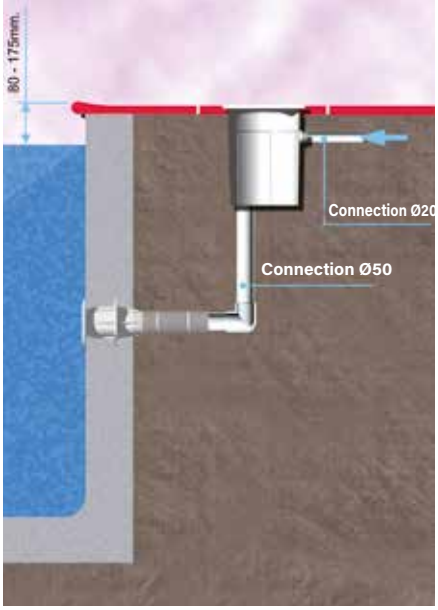


### Main drain installation

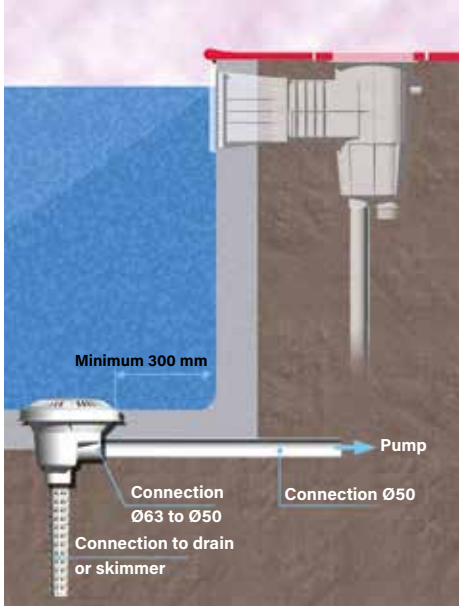


### Nozzle installation

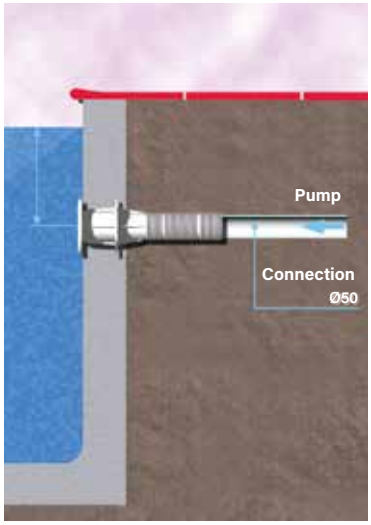


### Underwater installation

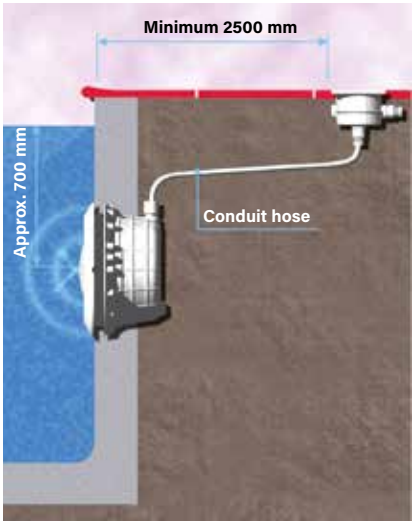


### Net'n'Clean valve installation

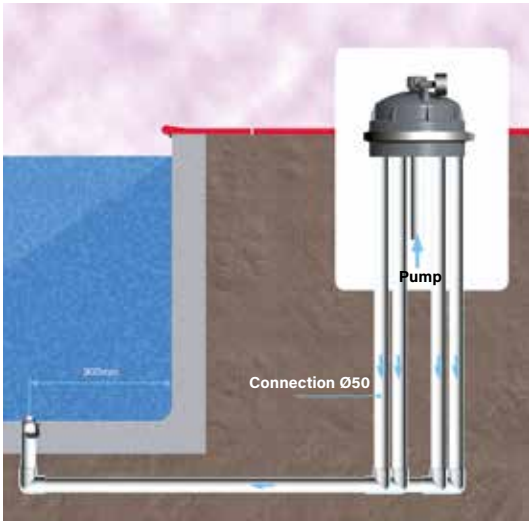

# Installation diagrams

## INSTALLATION DIAGRAMS

CONCRETE POOLS:

Concrete / liner

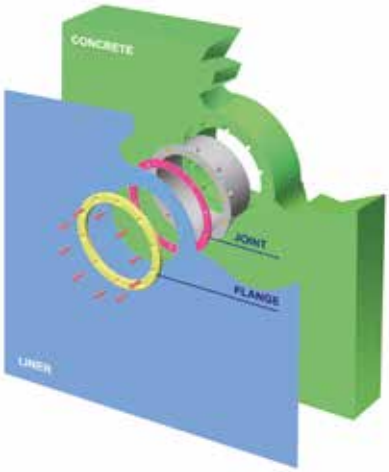


Concrete

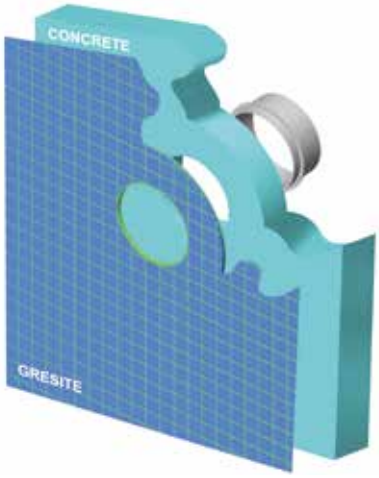


FIBREGLASS POOLS:

Fibreglass

Threaded fibreglass

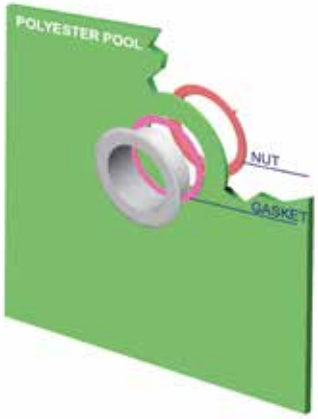


PANEL POOLS:

1 gasket

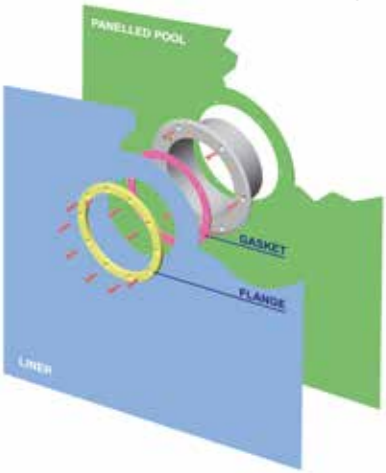


2 gaskets

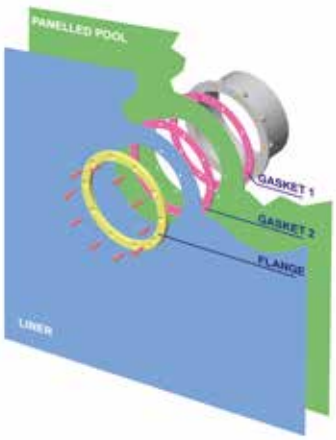

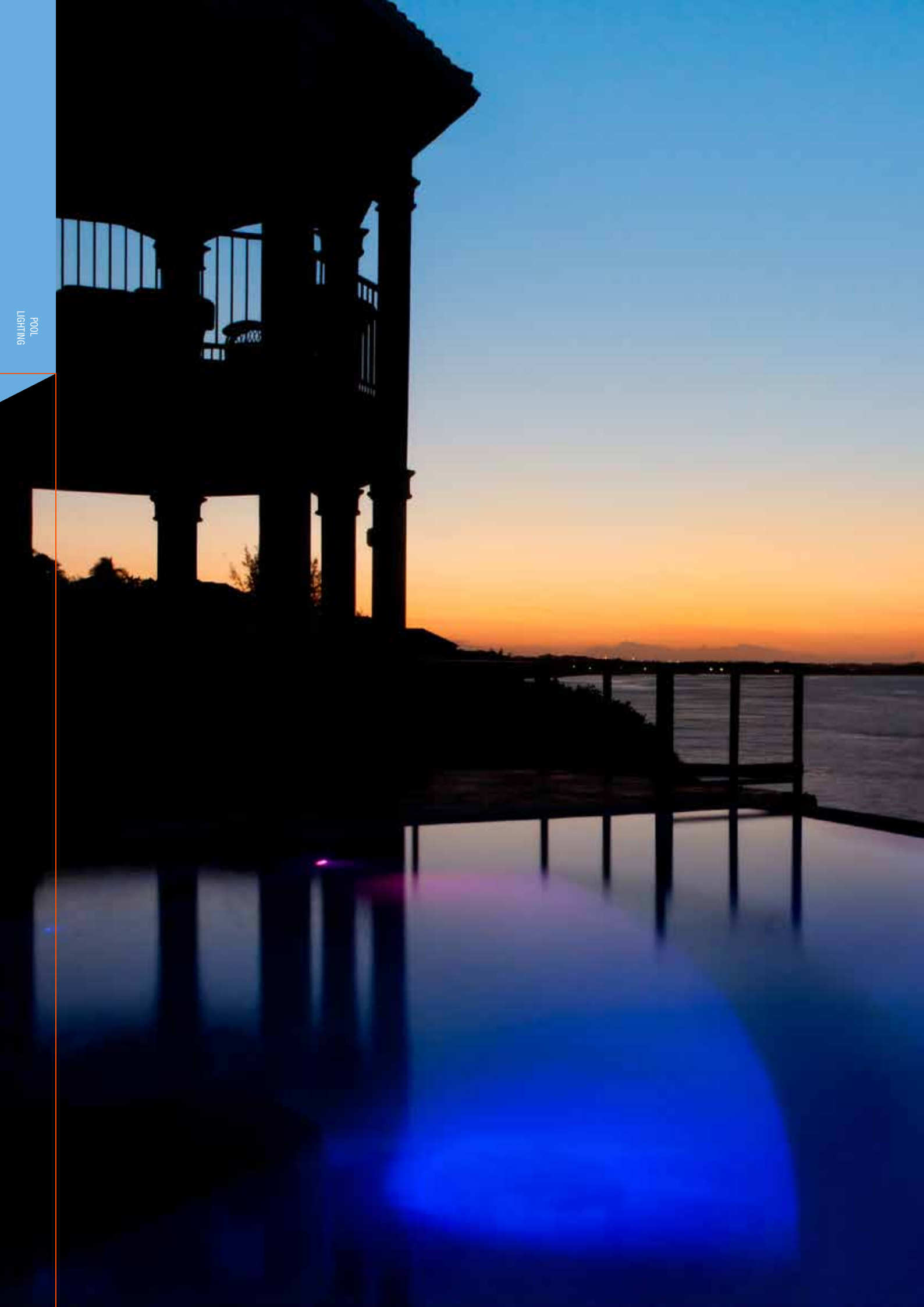

# POOL LIGHTING


160 LED LIGHTING FOR POOL
- 161 Lighting selection guide
- 165 LumiPlus Flexi and FlexiMini
- 170 PAR56 lamps
- 171 LumiPlus Design
- 172 LumiPlus Essential

178 LED LIGHTING FOR SPAS
- 179 LumiPlus MINI V2
- 179 LumiPlus MICRO

180 CONTROL SYSTEMS

183 HALOGEN LIGHTING

185 CONNECTION BOXES

186 NICHES

188 LED LIGHTING FOR POOL

190 LED LIGHTING FOR POOL


## Accessories


192 TRANSFORMERS AND ACCESSORIES

194 AQUARMONY UNDERWATER MUSIC SYSTEMS

195 OUTDOOR LIGHTING

# LumiPlus Connect

## A DELIGHTFUL EXPERIENCE

### Empower your lighting experience

Revolutionize your control experience with our adaptable solution. Seamlessly manage your lights through our Fluidra Pool App, designed for both Android and iPhone users. Have the freedom to control the pool lights your way with the added convenience of remote control.

### Absolute control wherever you are

Effortlessly integrate our system with the Fluidra Pool ecosystem for centralized control of your pool through the Fluidra Pool app, no matter where you are. Create captivating pool ambiance with color customization, set schedules and choose colors or sequences with ease.

### We put the focus on efficiency

Experience energy efficiency like never before with our innovative solution. Easily schedule the on and off times of your lights and take control of the light level with our dimming feature. The LumiPlus Connect is available in two wattages and are designed to adapt to every space and pool size, providing the perfect lighting solution.

LED LIGHTING FOR POOL

# LumiPlus Connect

- Absolute control from anywhere.
- Scheduling: Set your own schedules.
- Customize your own colours and colour changing scenes.
- Dimming: Light intensity control.
- Colour changing speed control.
- Voice control: Alexa compatible.

Smartphone control with the Fluidra Pool App (iOS/Android)

Two optional remote controllers:
White/Tunable White remote controller and RGB/RGBW remote controller.

## LumiPlus Flexi

| Light color | Luminous flux | Lighting area* |
|---|---|---|
| | 2.750 lm | 20-25 m² |
| | 4.300 lm | 25-35 m² |
| | 2.000 lm | 20-25 m² |
| | 2.500 lm | 20-25 m² |
| | 3.500 lm | 25-35 m² |

Type of installation

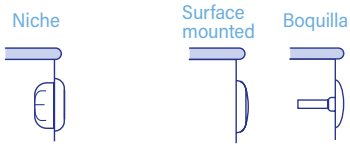


Decorative ring color

## LumiPlus FlexiMini

| | Light color | Luminous flux | Lighting area* |
|---|---|---|---|
| STAIRS | | 450 lm | 3 - 5 m² |
| STAIRS | | 300 lm | 3 - 5 m² |
| WALL | | 900 lm | 8 - 12 m² |
| WALL | | 600 lm | 8 - 12 m² |

Type of installation

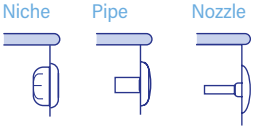


Decorative ring color

Codification and type of light

| | WW | TW | M | MW |
|---|---|---|---|---|
| *Monocolor White* | *Warm White* | *Tunable White* | *Multicolor* | *Multicolor* |
| *5.700K* | *3.000K* | *from 2.500 to 6.000K* | *RGB* | *RGB + White* |

** The lighting area is an estimate and may depend on the coating's colour and on the swimming pool's shape.*

LumiPlus Connect commercial video

# LumiPlus Plug&Play

## EASY TO INSTALL, EASY TO CONTROL

Only compatible with Plug&Play lights

### Easy pool light control

Enjoying PLUG&PLAY is as easy as plugging it in and using it. No installation work in a technical room is required. The device is designed to be completely intuitive to use. Just 6 buttons are enough to control the lights and the color of your entire pool.

### Lighting under control

PLUG&PLAY concentrates a high technology in a very compact design that allows us to obtain the best lighting performance on the market in its category.

### The most reliable remote control

A plug&play solution that solves the signaling problems common in other solutions on the market thanks to a high signal range (15 meters) and no synchronization problems.

# LumiPlus Plug&Play

- 15 meters signal range.
- Dimming: Light intensity control.
- 12 colours
- 8 colour changing sequences
- 8 colour changing speeds
- Also compatible with the Command Connect cabinet.

**LumiPlus Flexi**

| Light color | Luminous flux | Lighting area* |
|---|---|---|
| | 2.000 lm | 20-25 $m^2$ |

Type of installation: Niche, Surface mounted, Nozzle

Decorative ring color

**LumiPlus FlexiMini**

| Light color | Luminous flux | Lighting area* |
|---|---|---|
| STAIRS | 300 lm | 3-5 $m^2$ |
| WALL | 600 lm | 3-5 $m^2$ |

Type of installation: Niche, Pipe, Nozzle

Decorative ring color

**LumiPlus PAR56 lamp**

| Light color | Luminous flux | Lighting area* |
|---|---|---|
| | 2.000 lm | 20 - 25 $m^2$ |

LumiPlus Plug&Play commercial video

** The lighting area is an estimate and may depend on the coating's colour and on the swimming pool's shape.*

# LumiPlus On/Off

ON OFF

**LumiPlus Flexi**

*Powered at 12Vac*

| Light color | Luminous flux | Lighting area* |
|---|---|---|
| | 2.750 lm | 20-25 $m^2$ |

Type of installation: Niche, Surface mounted, Nozzle

Decorative ring color

**LumiPlus FlexiMini**

*Available powered at 12Vac and 24Vdc*

| Light color | Luminous flux | Lighting area* |
|---|---|---|
| STAIRS | 450 lm | 3-5 $m^2$ |

Type of installation: Niche, Pipe, Nozzle

Decorative ring color

**LumiPlus Flexi**

*Powered at 24Vdc*

| Light color | Luminous flux | Lighting area* |
|---|---|---|
| | 4.320 lm | 20-25 $m^2$ |
| | 1.485 lm | 15-20 $m^2$ |

Type of installation: Niche, Surface mounted, Nozzle

Decorative ring color

** The lighting area is an estimate and may depend on the coating's colour and on the swimming pool's shape.*

# Codification and type of light

Type of light in LumiPlus Connect and LumiPlus Plug&Play is specified with a letter at the end f the 5 digit code.

Available types of light are: White, Warm White, Tunable White, RGB and RGBW.

The five digit root code always refers to the model in white light.

| | *Code* | & | *Light Color* | = | PRODUCT |
|---|---|---|---|---|---|
| *For example:* *LumiPlus Flexi Connect* | *76600* | | *White* | | *Monocolor White 5.700K* |
| | *76600WW* | | *Warm White* | | *Warm White 3.000K* |
| | *76600TW* | | *Tunable White* | | *Tunable White from 2.500 to 5.700K* |
| | *76600M* | | *RGB* | | *Multicolor RGB* |
| | *76600MW* | | *RGB White* | | *Multicolor RGB + White* |

*NOTE : Not all models are available in all the above types of light.*

# LumiPlus Flexi & FlexiMini

SMART FLEXIBILITY,
MAXIMUM SIMPLICITY

## MADE UP OF TWO COMPONENTS

LumiPlus Flexi and FlexiMini projectors are underwater floodlights made up of two components: a **lamp** and a **decorative ring.** Flexi projectors can fit a niche, a nozzle or can be surfaced mounted, while FlexiMini projectors can be installed into a niche, a nozzle or a wall bushing.

**Set your own projector by following the next two steps:**

**1**

### Lamp

**STEP 1:** Selection of the lamp and type of light

+

**2**

### Fixation system & decorative ring

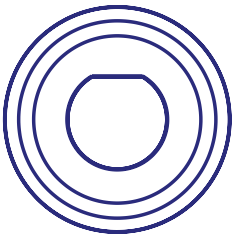

**STEP 2:** Selection of the fixation system and decorative ring color

ASTRALPOOL

# 1 Lamp

## Step 1: Selection of the lamp and type of light

LumiPlus Flexi and FlexiMini **Connect** lamps provide a total control of the light. Lamps are available in white, warm white, tunable white, RGB and RGBW. Easy and intuitive control through the LumiPlus Connect Controller and the Fluidra Pool App (or optionally through a Connect controller plus a Connect remote). See controller's page 180. Powered at 12 V AC.

| CONNECT | | | | | | |
|---|---|---|---|---|---|---|
| | **Description** | **Color** | **Efficiency** | **Code** | **Consumption** | **Luminous flux** |
| | LumiPlus Flexi Connnect W 2750 lm Lamp | White | E | 76600 | 27 W (38 VA) | 2750 lm |
| | LumiPlus Flexi Connnect WW 2750 lm Lamp | Warm white | E | 76600WW | 27 W (38 VA) | 2750 lm |
| | LumiPlus Flexi Connect TW 2750 lm lamp | Tunable white | E | 76600TW | 27 W (38 VA) | 2750 lm |
| | LumiPlus Flexi Connect RGB 2000 lm lamp | RGB | G | 76600M | 34.5 W (45 VA) | 2000 lm |
| | LumiPlus Flexi Connect RGBW 2500 lm lamp | RGBW | G | 76600MW | 28 W (49 VA) | 2500 lm |
| | LumiPlus Flexi Connect W 4300 lm lamp | White | E | 76601 | 42 W (60 VA) | 4300 lm |
| | LumiPlus Flexi Connect WW 4300 lm lamp | Warm white | E | 76601WW | 42 W (60 VA) | 4300 lm |
| | LumiPlus Flexi Connect TW 4300 lm lamp | Tunable white | E | 76601TW | 42 W (60 VA) | 4300 lm |
| | LumiPlus Flexi Connect RGBW 3500 lm lamp | RGBW | G | 76601MW | 56 W (72 VA) | 3500 lm |
| | LumiPlus FlexiMini Stairs Connect W lamp | White | D | 76602 | 3.5 W (4.5 VA) | 450 lm |
| | LumiPlus FlexiMini Stairs Connect WW lamp | Warm white | D | 76602WW | 3.5 W (4.5 VA) | 450 lm |
| | LumiPlus FlexiMini Stairs Connect TW lamp | Tunable white | D | 76602TW | 3.5 W (4.5 VA) | 450 lm |
| | LumiPlus FlexiMini Stairs Connect RGB lamp | RGB | G | 76602M | 4 W (6 VA) | 300 lm |
| | LumiPlus FlexiMini Stairs Connect RGBW lamp | RGBW | F | 76602MW | 5 W (7.5 VA) | 400 lm |
| | LumiPlus FlexiMini Wall Connect W lamp | White | D | 76603 | 7 W (10.5 VA) | 900 lm |
| | LumiPlus FlexiMini Wall Connect WW lamp | Warm white | D | 76603WW | 7 W (10.5 VA) | 900 lm |
| | LumiPlus FlexiMini Wall Connect TW lamp | Tunable white | D | 76603TW | 7 W (10.5 VA) | 900 lm |
| | LumiPlus FlexiMini Wall Connect RGBW lamp | RGBW | F | 76603MW | 10 W (15 VA) | 800 lm |

LumiPlus Flexi and FlexiMini **Plug & Play** lamps are the easiest and funniest way to control RGB light. All that is needed is a Plug & Play lamp and a Plug & Play remote controller. See controller's page 181. Powered at 12 V AC.

| PLUG & PLAY | | | | | | |
|---|---|---|---|---|---|---|
| | **Description** | **Color** | **Efficiency** | **Code** | **Consumption** | **Luminous flux** |
| | LumiPlus Flexi Plug & Play lamp | RGB | G | 76579M | 34.5 W (45 VA) | 2000 lm |
| | KIT 1 x LumiPlus Flexi Plug & Play lamp + Remote Control | RGB | G | 76580M | 34.5 W (45 VA) | 2000 lm |
| | KIT 2 x LumiPlus Flexi Plug & Play lamps + Remote Control | RGB | G | 76581M | 34.5 W (45 VA) | 2000 lm |
| | LumiPlus FlexiMini Stairs Plug & Play lamp | RGB | G | 76588M | 4 W (6 VA) | 300 lm |
| | LumiPlus FlexiMini Wall Plug & Play lamp | RGB | G | 76589M | 8 W (12 VA) | 600 lm |
| | KIT 3 x LumiPlus FlexiMini Wall Plug & Play lamps + Remote Control | RGB | G | 76590M | 8 W (12 VA) | 600 lm |

LumiPlus Flexi and FlexiMini **on/off** lamps are monocolor white lamps, available in white and warm white, and powered at 12 V AC or 24 V DC. Keep it simple, just switch them on to light your pool.

| ON/OFF | | | | | | |
|---|---|---|---|---|---|---|
| | **Description** | **Color** | **Efficiency** | **Code** | **Consumption** | **Luminous flux** |
| | **Powered at 12 V AC** | | | | | |
|  | LumiPlus Flexi W 2750 lm lamp | White | F | 76573 | 28 W (40 VA) | 2750 lm |
| | LumiPlus Flexi WW 2750 lm lamp | Warm white | F | 76573WW | 28 W (40 VA) | 2750 lm |
| | LumiPlus FlexiMini Stairs W lamp | White | D | 74400 | 3.5 W (6 VA) | 450 lm |
| | LumiPlus FlexiMini Stairs WW lamp | Warm white | D | 74400WW | 3.5 W (6 VA) | 450 lm |
| | LumiPlus FlexiMini Wall W lamp | White | D | 74406 | 7.2 W (10.5 VA) | 900 lm |
| | LumiPlus FlexiMini Wall WW lamp | Warm white | D | 74406WW | 7.2 W (10.5 VA) | 900 lm |
| | **Powered at 24 V DC (power pack included)** | | | | | |
| | LumiPlus Flexi Maximum Efficiency | White | B | 71236 | 8.7 W (8.7 VA) | 1485 lm |
| | LumiPlus Flexi V1 DC W lamp | White | E | 71201 | 14 W (14 VA) | 1485 lm |
| | LumiPlus Flexi V1 DC WW lamp | Warm white | E | 71201WW | 14 W (14 VA) | 1485 lm |
| | LumiPlus Flexi V2 DC W lamp | White | D | 71202 | 32 W (32 VA) | 4300 lm |
| | LumiPlus Flexi V2 DC WW lamp | Warm white | D | 71202WW | 32 W (32 VA) | 4300 lm |
| | LumiPlus FlexiMini Stairs DC W lamp | White | C | 74401 | 3 W (3 VA) | 450 lm |
| | LumiPlus FlexiMini Stairs DC WW lamp | Warm white | C | 74401WW | 3 W (3 VA) | 450 lm |
| | LumiPlus FlexiMini Wall W lamp | White | D | 74407 | 6.8 W (6.8 VA) | 900 lm |
| | LumiPlus FlexiMini Wall WW lamp | Warm white | D | 74407WW | 6.8 W (6.8 VA) | 900 lm |

**Color temperatures:** White = 5700 K / Warm white = 3000 K / Tunable white = 2500 K - 6000 K.

# ❷ Fixation system and decorative ring

## Step 2: Selection of the fixation system and decorative ring color

**(every decorative ring includes the installation fittings)**

## Flexi decorative rings Only compatible with Flexi lamps

### FLEXINICHE

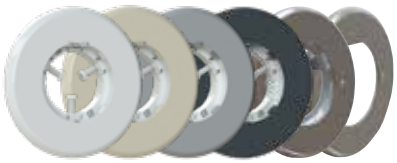

| Description | Code |
|---|---|
| White | 71209 |
| Beige | 71209CL090 |
| Light grey | 71209CL129 |
| Anthracite grey | 71209CL144 |
| Stainless steel AISI 316-L embellisher with ABS body | 71209CLSS |
| Full Stainless Steel AISI 316-L** | 73440 |

Compatible with any niche from D. 180 mm to D. 230 mm. Decorative ring dimensions: Ø 294 mm. **Full stainless steel dimensions: Ø 310 mm.

**How to install?**

### FLEXISLIM

| Description | Code |
|---|---|
| White | 71210 |
| Beige | 71210CL090 |
| Light grey | 71210CL129 |
| Anthracite grey | 71210CL144 |

Can be installed surface mounted on new pools or clipped to the existing AstralPool's surface fittings. Decorative ring dimensions: Ø 290 mm.

**How to install?**

### FLEXIRAPID

| Description | Code |
|---|---|
| White | 71211 |
| Beige | 71211CL090 |
| Light grey | 71211CL129 |
| Anthracite grey | 71211CL144 |

Compatible with any 1" ½ internal thread nozzle. Decorative ring dimensions: Ø 267 mm.

**How to install?**

## FlexiMini decorative ring Only compatible with FlexiMini lamps

### FLEXIMINI NICHE

| Description | Code |
|---|---|
| White | 74392 |
| Beige | 74392CL090 |
| Light grey | 74392CL129 |
| Anthracite grey | 74392CL144 |
| Stainless Steel A316-L with ABS body | 74392CLSS |

To be installed into a niche.
Decorative ring dimensions: Ø 161 mm.

**How to install?**

### FLEXIMINI NOZZLE L

| Description | Code |
|---|---|
| White | 74393 |
| Beige | 74393CL090 |
| Light grey | 74393CL129 |
| Anthracite grey | 74393CL144 |
| Stainless Steel A316-L with ABS body | 74393CLSS |

To be installed into nozzles with a Ø 116 mm trim or less.
Decorative ring dimensions: Ø 132 mm.

**How to install?**

### FLEXIMINI NOZZLE S

| Description | Code |
|---|---|
| White | 74394 |
| Beige | 74394CL090 |
| Light grey | 74394CL129 |
| Anthracite grey | 74394CL144 |
| Stainless Steel A316-L with ABS body | 74394CLSS |

To be installed into nozzles with a Ø 90 mm trim or less.
Decorative ring dimensions: Ø 96 mm.

**How to install?**

### FLEXIMINI PIPE

| Description | Code |
|---|---|
| White | 74395 |
| Beige | 74395CL090 |
| Light grey | 74395CL129 |
| Anthracite grey | 74395CL144 |
| Stainless Steel A316-L with ABS body | 74395CLSS |

To be installed into pipes or wall bushings in concrete pools.
Decorative ring dimensions: Ø 96 mm.

**How to install?**

ASTRALPOOL

LED LIGHTING FOR POOL

# Niches guide

## For LumiPlus Flexi and LumiPlus FlexiMini

| TYPE OF INSTALLATION | TYPE OF PROJECTOR | TYPE OF POOL | | | | | | |
|---|---|---|---|---|---|---|---|---|
| | | CONCRETE | CONCRETE + LINER | | FIBREGLASS | | PANELS | |
| | | | with inserts | without inserts | with inserts | without inserts | with inserts | without inserts |
| | FlexiNiche | 00349 | 00364 | 17805/28887 | 00364 | 72261/28887 | 23671 | 23670 |
| | FlexiNiche | 59813 | 59814 | 59815 | 59814 | 59815 | 59814 +double gasket (59814-0100) | 59815 +double gasket (59814-0100) |
| | FlexiNiche full SS | 54102 | 54103 | - | 54103 | - | - | - |
| | FlexiSlim | - | - | - | - | - | - | - |
| | FlexiRapid | 35418 | 59983<br>17382 | 06544 | | 74179 | 00332 | 27084 |
| | FlexiMini Niche | 06967 | 00369 | - | 00369 | - | 49828 | - |
| | FlexiMini L Nozzle | 00300/ 00301 | 59983<br>17382 | - | - | 00336 | 00332 | - |
| | FlexiMini S Nozzle | 35418 | - | 06544 | - | 74179 | - | 27084 |
| | FlexiMini Pipe | 15661 | - | - | - | - | - | - |

# Energy efficiency

## New European regulation of energy labeling for lamps and projectors

**NEW ENERGY EFFICIENCY LABEL FOR LIGHTING**

**The European Union launches the European Regulation EU 2019/2015 on new energy efficiency labeling in lamps and projectors that starts on September 1st, 2021 and repeals the European Regulation EU 874/2012.**

The new Energy Efficiency label allows:

- Providing more information to the installer and customer. Thanks to the new QR code will access the European EPREL base, where the characteristics of the product are available.
- Carrying out a new energy classification promotes evolution of lighting technology.
- Greater control of products manufactured in the EU, with the QR code.

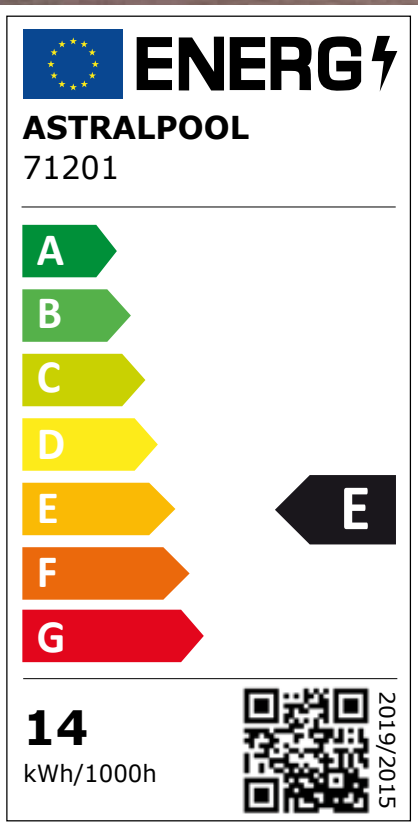


New label

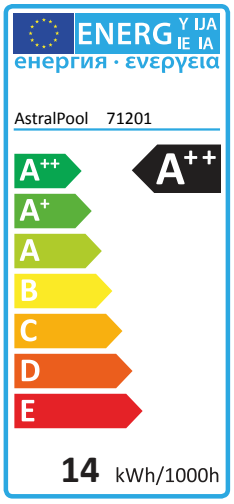


Old label

The new classification must be marked on the unit packagings with the label, and in catalogs and product data sheets with the symbol below.

ASTRALPOOL

LED LIGHTING FOR POOL

# PAR56 lamps

## LumiPlus Plug&Play lamps

MADE IN EUROPE

Easy to install, easy to control: A very intuitive RGB control without further installation works in the electric cabinet, or the technical room, make LumiPlus Plug&Play PAR56 lamps the perfect retrofit solution.

Powered at 12 Vac.

Compatible with PAR56 projectors.

Cable is not included.

## TECHNICAL FEATURES

| | Description | Light Color | | Code | Consumption | Luminous flux |
|---|---|---|---|---|---|---|
| | | RGB | | | | |
| | LumiPlus PAR56 Plug&Play lamp | RGB | G | 76591M | 34,5W (45VA) | 2000 lm |
| Works with Plug&Play remote controller 74339 (not included). | | | | | | |
| | KIT 1 x LumiPlus PAR56 Plug&Play lamp + Remote Control | RGB | G | 76592M | 34,5W (45VA) | 2000 lm |
| The kit includes one LumiPlus Plug&Play PAR56 lamp plus a LumiPlus Plug&Play remote control. | | | | | | |
| | KIT 2 x LumiPlus PAR56 Plug&Play lamp + Remote Control | RGB | G | 76593M | 34,5W (45VA) | 2000 lm |
| The kit include two LumiPlus Plug&Play PAR56 lamp plus a LumiPlus Plug&Play remote control. | | | | | | |

- 15 meters signal range.
- Dimming: Light intensity control.
- 12 colours
- 8 colour changing sequences
- 8 colour changing speeds
- Also compatible with the Command Connect cabinet.

LED LIGHTING FOR POOL

# Projector Design

MADE IN EUROPE

## DESCRIPTION

The LumiPlus Design projector is a high power underwater projector that can be installed in 180mm diameter niches.

The decorative ring is available in Stainless Steel effect and Pure White.

The projector is available in 3 different types of light: white 5700K, warm white 3000K, and RGB multi-color.

The RGB versions are compatible with LumiPlus Connect Controller, code 76290, and LumiPlus RGB ECO push-button, code 32458.

## TECHNICAL FEATURES

| Light Color | | White - Warm White - RGB | | | |
|---|---|---|---|---|---|
| | | White | Stainless steel effect | Consumption | Luminous flux |
| White | D | 59807 | 59805 | 32W (35VA) | 4320 lm |
| Warm White | D | 59807WW | 59805WW | 32W (35VA) | 4320 lm |
| RGB | F | 59803 | 59801 | 32W (42VA) | 2544 lm |

Rated voltage: 12V AC. IP68 protection. Includes 2.5 m H07RN-F 2x1.5 mm² cable.

# Niches guide

## For LumiPlus Design

| TYPE OF INSTALLATION | TYPO OF PROJECTOR | TYPE POOL | | | | | | |
|---|---|---|---|---|---|---|---|---|
| | | CONCRETE | CONCRETE + LINER | | FIBREGLASS | | PANELS | |
| | | | with inserts | without inserts | with inserts | without inserts | with inserts | without inserts |
| Ø180mm | LumiPlus Design | 59813 | 59814 | 59815 | 59814 | 59815 | 59814 +double gasket (59814-0100) | 59815 +double gasket (59814-0100) |

# LUMIPLUS ESSENTIAL

## A CLASSIC UPDATED TO TODAY'S LIGHT

### THE CHANGEOVER TO LED WITHOUT COMPLICATIONS

No need to manipulate the electrical panel as it is compatible with the same transformers as halogen lamps and RGB control is done through a remote control.

### A RELIABLE CLASSIC UPDATED

The smart choice because of its competitive price and it also has the same principles (in terms of appearance and installation) as halogen products, but now with LED technology. It fits perfectly with existing structures, making it ideal for retrofit. Powered at 12Vac.

### LIGHT UP YOUR POOL EFFICIENTLY

Enjoy greater illumination at a lower price and the tranquility of having purchased an AstralPool light:

- **Made in the EU:** State-of-the-art manufacturing plant.
- **Technical know-how:** • +14 years of experience designing, developing and manufacturing underwater products, now updated with LED technology.
- **Quality control:** Each unit is tested prior to validation to ensure IP68 watertightness validation to guarantee its its water tightness and luminous performance.

## THE RANGE

**PAR56 LAMP** | **PAR56 PROJECTOR** | **RAPID PROJECTOR** | **FLAT PROJECTOR** | **MINI PROJECTOR**

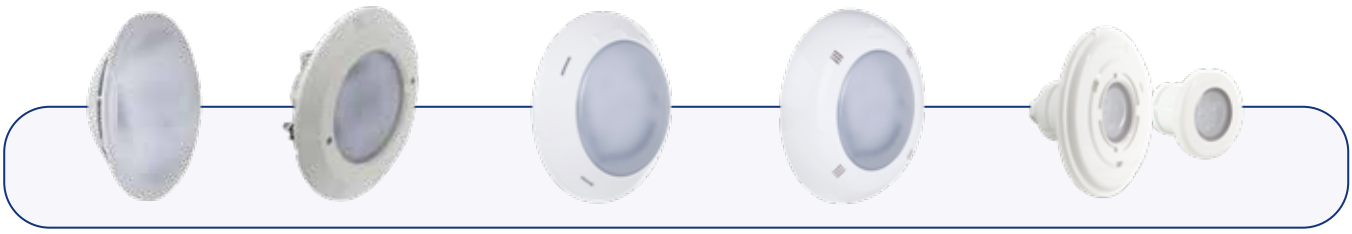

ASTRALPOOL

LED LIGHTING FOR POOL

# LumiPlus Essential

## PAR56 lamps

Retrofit for PAR56 projectors. Cable is not included.

### TECHNICAL FEATURES

**White - Warm White - RGB**

| Description | Light Color | | Code | Consumption | Luminous flux |
|---|---|---|---|---|---|
| LumiPlus Essential PAR56 White LED lamp | White | E | 73761 | 14.5 W (20 VA) | 1485 lm |
| LumiPlus Essential PAR56 Warm White LED lamp | Warm White | E | 73761WW | 14,5 W (20 VA) | 1485 lm |
| LumiPlus Essential PAR56 RGB LED lamp | RGB | G | 75767 | 22 W (29 VA) | 1 100 lm |
| | Can be controlled by push-button 32458, LumiPlus Range Extender 64633 + RC1100 remote controller 75773 or LumiPlus Connect controller 76290. Not campatible wih RC1100 remote controller without a LumiPlus Range Extender. | | | | |

**Remote Controlled RGB RC 1100**

| Description | Light Color | | Code | Consumption | Luminous flux |
|---|---|---|---|---|---|
| LumiPlus Essential PAR56 RGB LED lamp + RC 1100 | RGB | G | 75771 | 22 W (29 VA) | 1 100 lm |
| | Compatible with RC1100 remote controller. (remote controller is included) | | | | |
| LumiPlus Essential PAR56 RGB LED lamp | RGB | G | 75772 | 22 W (29 VA) | 1 100 lm |
| | Compatible with RC1100 remote controller. (remote controller is not included) | | | | |

How to replace a PAR56 projector.

# LumiPlus Essential

## PAR56 projectors

Niche is not included. Compatible with Ø230mm niches. (see page 186).

### TECHNICAL FEATURES

**White - Warm White - RGB**

| Description | Light Color | | Code | Consumption | Luminous flux |
|---|---|---|---|---|---|
| LumiPlus Essential PAR56 White LED projector | White | E | 70870 | 14.5 W (20 VA) | 1485 lm |
| LumiPlus Essential PAR56 White LED projector | Warm White | E | 70870WW | 14,5 W (20 VA) | 1485lm |
| LumiPlus Essential PAR56 RGB LED projector | RGB | G | 75435 | 22 W (29 VA) | 1 100 lm |
| | Can be controlled by push-button 32458, LumiPlus Range Extender 64633 + RC1100 remote controller 75773 or LumiPlus Connect controller 76290. Not campatible wih RC1100 remote controller without a LumiPlus Range Extender. | | | | |

**Remote Controlled RGB RC 1100**

| Description | Light Color | | Code | Consumption | Luminous flux |
|---|---|---|---|---|---|
| LumiPlus Essential PAR56 RGB LED projector + RC 1100 | RGB | G | 75777 | 22 W (29 VA) | 1 100 lm |
| | Compatible with RC1100 remote controller. (remote controller is included) | | | | |
| LumiPlus Essential PAR56 RGB LED projector | RGB | G | 75778 | 22 W (29 VA) | 1 100 lm |
| | Compatible with RC1100 remote controller. (remote controller is not included) | | | | |

# LumiPlus Essential

## PAR56 projector kit for concrete pool

Ø230 mm niche to install in concrete pools is included

### TECHNICAL FEATURES

**White - Warm White - RGB**

| Description | Light Color | | Code | Consumption | Luminous flux |
|---|---|---|---|---|---|
| LumiPlus Essential PAR56 White LED Kit for concrete pool | White | E | 66828 | 14.5 W (20 VA) | 1485 lm |
| LumiPlus Essential PAR56 White LED Kit for concrete pools | Warm White | E | 66828WW | 14,5 W (20 VA) | 1485lm |
| LumiPlus Essential PAR56 RGB LED Kit for concrete pools | RGB | G | 75437 | 22 W (29 VA) | 1 100 lm |
| | Can be controlled by push-button 32458, LumiPlus Range Extender 64633 + RC1100 remote controller 75773 or LumiPlus Connect controller 76290. Not compatible wih RC1100 remote controller without a LumiPlus Range Extender. | | | | |

**Remote Controlled RGB RC 1100**

| Description | Light Color | | Code | Consumption | Luminous flux |
|---|---|---|---|---|---|
| LumiPlus Essential PAR56 RGB LED Kit for concrete pools + RC 1100 | RGB | G | 75781 | 22 W (29 VA) | 1 100 lm |
| | Compatible with RC1100 remote controller. (remote controller is included) | | | | |
| LumiPlus Essential PAR56 RGB LED Kit for concrete pools | RGB | G | 75782 | 22 W (29 VA) | 1 100 lm |
| | Compatible with RC1100 remote controller. (remote controller is not included) | | | | |

# LumiPlus Essential

## PAR56 projector kit for fibreglass pool

Ø230 mm niche to install in fibreglass pools is included

### TECHNICAL FEATURES

**White - Warm White - RGB**

| Description | Light Color | | Code | Consumption | Luminous flux |
|---|---|---|---|---|---|
| LumiPlus Essential PAR56 White LED Kit for fibreglass | White | E | 70528 | 14.5 W (20 VA) | 1485 lm |
| LumiPlus Essential PAR56 White LED Kit for fibreglass | Warm White | E | 70528WW | 14,5 W (20 VA) | 1485lm |
| LumiPlus Essential PAR56 RGB LED Kit for fibreglass | RGB | G | 75440 | 22 W (29 VA) | 1 100 lm |
| | Can be controlled by push-button 32458, LumiPlus Range Extender 64633 + RC1100 remote controller 75773 or LumiPlus Connect controller 76290. Not compatible wih RC1100 remote controller without a LumiPlus Range Extender. | | | | |

**Remote Controlled RGB RC 1100**

| Description | Light Color | | Code | Consumption | Luminous flux |
|---|---|---|---|---|---|
| LumiPlus Essential PAR56 RGB LED Kit for fibreglass + RC 1100 | RGB | G | 75784 | 22 W (29 VA) | 1 100 lm |
| | Compatible with RC1100 remote controller. (remote controller is included) | | | | |
| LumiPlus Essential PAR56 RGB LED Kit for fibreglass | RGB | G | 75785 | 22 W (29 VA) | 1 100 lm |
| | Compatible with RC1100 remote controller. (remote controller is not included) | | | | |

How to replace a Flat projector.

LED LIGHTING FOR POOL

# LumiPlus Essential

## Flat projector

### TECHNICAL FEATURES

**White - Warm White - RGB**

| Description | Light Color | | Code | Consumption | Luminous flux |
|---|---|---|---|---|---|
| LumiPlus Essential White LED Flat projector | White | E | 75821 | 14.5 W (20 VA) | 1485 lm |
| LumiPlus Essential White LED Flat projector | Warm White | E | 75821WW | 14,5 W (20 VA) | 1485lm |
| LumiPlus Essential RGB LED Flat projector | RGB | G | 75824 | 22 W (29 VA) | 1100 lm |
| | Can be controlled by push-button 32458, LumiPlus Range Extender 64633 + RC1100 remote controller 75773 or LumiPlus Connect controller 76290. Not campatible wih RC1100 remote controller without a LumiPlus Range Extender. | | | | |

**Remote Controlled RGB RC 1100**

| Description | Light Color | | Code | Consumption | Luminous flux |
|---|---|---|---|---|---|
| LumiPlus Essential RGB LED Flat projector + RC 1100 | RGB | G | 75825 | 22 W (29 VA) | 1100 lm |
| | Compatible with RC1100 remote controller. (remote controller is included) | | | | |
| LumiPlus Essential RGB LED Flat projector | RGB | G | 75826 | 22 W (29 VA) | 1100 lm |
| | Compatible with RC1100 remote controller. (remote controller is not included) | | | | |

# LumiPlus Essential

## Mini projector for niche installation

### TECHNICAL FEATURES

| | Description | Light Color | | Code | Consumption | Luminous flux |
|---|---|---|---|---|---|---|
| | LumiPlus Essential Mini White niche mounted | White | E | 76680 | 4 W (6 VA) | 315lm |
| | LumiPlus Essential Mini Warm White niche mounted | Warm White | E | 76680WW | 4 W (6 VA) | 315lm |
| | LumiPlus Essential Mini RGB niche mounted | RGB | G | 76682 | 4 W (7 VA) | 186lm |
| | Can be controlled by push-button 32458, LumiPlus Range Extender 64633 + RC1100 remote controller 75773 or LumiPlus Connect controller 76290. Not campatible wih RC1100 remote controller without a LumiPlus Range Extender. | | | | | |

# LumiPlus Essential

## Mini projector for wall bushings

### TECHNICAL FEATURES

| | Description | Light Color | | Code | Consumption | Luminous flux |
|---|---|---|---|---|---|---|
| | LumiPlus Essential Mini White quick coupling | White | E | 76681 | 4 W (6 VA) | 315lm |
| | LumiPlus Essential Mini Warm White quick coupling | Warm White | E | 76681WW | 4 W (6 VA) | 315lm |
| | LumiPlus Essential Mini RGB quick coupling | RGB | G | 76683 | 4 W (7 VA) | 186lm |
| | Can be controlled by push-button 32458, LumiPlus Range Extender 64633 + RC1100 remote controller 75773 or LumiPlus Connect controller 76290. Not campatible wih RC1100 remote controller without a LumiPlus Range Extender. | | | | | |

LED LIGHTING FOR POOL

# LumiPlus Essential

## Rapid Concrete pools installation

### TECHNICAL FEATURES

**White - Warm White - RGB**

| Description | Light Color | | Code | Consumption | Luminous flux |
|---|---|---|---|---|---|
| LumiPlus Essential White LED Rapid Concrete projector | White | E | 62327 | 14.5 W (20 VA) | 1485 lm |
| LumiPlus Essential White LED Rapid Concrete projector | Warm White | E | 62327WW | 14,5 W (20 VA) | 1485lm |
| LumiPlus Essential RGB LED Rapid Concrete projector | RGB | G | 62328 | 22 W (29 VA) | 1 100 lm |
| | Can be controlled by push-button 32458, LumiPlus Range Extender 64633 + RC1100 remote controller 75773 or LumiPlus Connect controller 76290. Not campatible wih RC1100 remote controller without a LumiPlus Range Extender. | | | | |

**Remote Controlled RGB RC 1100**

| Description | Light Color | | Code | Consumption | Luminous flux |
|---|---|---|---|---|---|
| LumiPlus Essential RGB LED Rapid Concrete projector + RC 1100 | RGB | G | 62393 | 22 W (29 VA) | 1 100 lm |
| | Compatible with RC1100 remote controller. (remote controller is included) | | | | |
| LumiPlus Essential RGB LED Rapid Concrete projector | RGB | G | 64561 | 22 W (29 VA) | 1 100 lm |
| | Compatible with RC1100 remote controller. (remote controller is not included) | | | | |

# LumiPlus Essential

## Rapid Fibreglass or liner pools installation

### TECHNICAL FEATURES

**White - Warm White - RGB**

| Description | Light Color | | Code | Consumption | Luminous flux |
|---|---|---|---|---|---|
| LumiPlus Essential White LED Rapid Liner projector | White | E | 64339 | 14.5 W (20 VA) | 1485 lm |
| LumiPlus Essential White LED Rapid Liner projector | Warm White | E | 64339WW | 14,5 W (20 VA) | 1485lm |
| LumiPlus Essential RGB LED Rapid Liner projector | RGB | G | 64340 | 22 W (29 VA) | 1 100 lm |
| | Can be controlled by push-button 32458, LumiPlus Range Extender 64633 + RC1100 remote controller 75773 or LumiPlus Connect controller 76290. Not campatible wih RC1100 remote controller without a LumiPlus Range Extender. | | | | |

**Remote Controlled RGB RC 1100**

| Description | Light Color | | Code | Consumption | Luminous flux |
|---|---|---|---|---|---|
| LumiPlus Essential RGB LED Rapid Liner projector + RC 1100 | RGB | G | 65307 | 22 W (29 VA) | 1 100 lm |
| | Compatible with RC1100 remote controller. (remote controller is included) | | | | |
| LumiPlus Essential RGB LED Rapid Liner projector | RGB | G | 64341 | 22 W (29 VA) | 1 100 lm |
| | Compatible with RC1100 remote controller. (remote controller is not included) | | | | |

LED LIGHTING FOR POOL

# LumiPlus Essential

## Rapid projector + nozzle for fibreglass/liner pool +cable gland for Ø50mm pipe

### TECHNICAL FEATURES

**White - Warm White - RGB**

| | Description | Light Color | | Code | Consumption | Luminous flux |
|---|---|---|---|---|---|---|
| | LumiPlus Essential White LED Rapid Liner + BQ projector | White | E | 65314 | 14.5 W (20 VA) | 1485 lm |
| | LumiPlus Essential White LED Rapid Liner + BQ projector | Warm White | E | 65314WW | 14,5 W (20 VA) | 1485lm |

**Remote Controlled RGB RC 1100**

| | Description | Light Color | | Code | Consumption | Luminous flux |
|---|---|---|---|---|---|---|
| | LumiPlus Essential RGB LED Rapid Liner + BQ projector + RC 1100 | RGB | G | 65315 | 22 W (29 VA) | 1100 lm |

Compatible with RC1100 remote controller. (remote controller is included)

# Niches guide

## Essential

| TYPE OF INSTALLATION | TYPE OF PROJECTOR | TYPE OF POOL | | | | | | |
|---|---|---|---|---|---|---|---|---|
| | | CONCRETE | CONCRETE + LINER | | FIBREGLASS | | PANELS | |
| | | | with inserts | without inserts | with inserts | without inserts | with inserts | without inserts |
| Ø230mm | Standard Projector PAR56 | 00349 | 00364 | 17805/28887 | 00364 | 72261/28887 | 23671 | 23670 |
| | Flat projector | Installation fittings are included with the projector | | | | | - | - |
| | Mini niche mounted | 06967 | 00369 | - | 00369 | - | 49828 | - |
| | Rapid | 35418 | 59983 17382 | 06544 | | 74179 | 00332 | 27084 |
| | Mini wall bushings | 15661 | - | - | - | - | - | - |

LED LIGHTING FOR SPAS

# Lighting selection guide

## LumiPlus projectors FOR SPAS

| | SPAs | | | |
|---|---|---|---|---|
| | White light | | RGB light | |
| **The RGB versions are compatible with LumiPlus Connect Controller.** | Micro | Mini V2 | Micro | Mini V2 |
| Type of installation | | | | |
| Light color temperature | W 5.700K WW 3.000K | W 5.700K WW 3.000K | | |
| Decorative ring color | White<br>Stainless steel | White<br>Stainless steel | White<br>Stainless steel | White<br>Stainless steel |
| Lighting area | 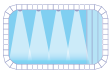 **5m²**x projector | | 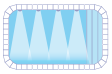 **3m²**x projector | |

# LumiPlus MINI V2

MADE IN EUROPE

## DESCRIPTION

The LumiPlus Mini V2 projector is a small dimensions underwater projector for SPAs.

The decorative ring is available in Stainless Steel or white ABS. Anthracite, Grey and Beige ABS decorative rings are also available.

The projector is available in 3 different types of light: white 5700K, warm white 3000K, and RGB multi-color.

The RGB versions are compatible with LumiPlus Connect Controller, code 76290, and LumiPlus RGB ECO push-button, code 32458.

### MINI V2 projector for SPA

| Light Color | | | Type of decorative ring | | Consumption | Luminous flux |
|---|---|---|---|---|---|---|
| | | | White | S.S. | | |
| | White | F | 52132 | 52133 | 4W (6VA) | 315 lm |
| | Warm White | F | 52132WW | 52133WW | 4W (6VA) | 315 lm |
| | RGB | G | 52126 | 52127 | 4W (7VA) | 186 lm |

Rated Voltage: 12V AC. IP68 protection. Includes 2.5 m H07RN-F 2x1.5 mm² cable. Fastened between a threaded bolt and 2" nut.

### Color decorative rings for MINI V2 projectors

| | | Beige | Light grey | Anthracite |
|---|---|---|---|---|
| | Color front plate for MINI V2 projector for SPA | 08554-0500CL090 | 08554-0500CL129 | 08554-0500CL144 |

# LumiPlus MICRO

MADE IN EUROPE

## DESCRIPTION

The LumiPlus Micro projector is a small dimensions underwater projector for SPAs.

The decorative ring is available in Stainless Steel or white ABS.

The projector is available in 3 different types of light: white 5700K, warm white 3000K, and RGB multi-color.

The RGB versions are compatible with LumiPlus Connect Controller, code 76290, and LumiPlus RGB ECO push-button, code 32458.

### MICRO projector for SPA

| Light Color | | | Type of decorative ring | | Consumption | Luminous flux |
|---|---|---|---|---|---|---|
| | | | White | S.S. | | |
| | White | F | 40765 | 40766 | 4W (6VA) | 315 lm |
| | Warm White | F | 40765WW | 40766WW | 4W (6VA) | 315 lm |
| | RGB | G | 64554 | 64555 | 4W (7VA) | 186 lm |

Rated Voltage: 12V AC. IP68 protection. Includes 2.5 m H07RN-F 2x1.5 mm² cable. Fastened between a threaded bolt and 1" ½ nut.

# Control systems



SIMPLE

EMPOWER YOUR LIGHTING EXPERIENCE

SMART

ABSOLUTE CONTROL WHEREVER YOU ARE

EFFICIENT

WE PUT THE FOCUS ON EFFICIENCY

## LUMIPLUS CONNECT

### LumiPlus Connect

| System | | Code | Description | Projectors |
|---|---|---|---|---|
| LUMIPLUS CONNECT CONTROLLER | FLUIDRA POOL | 76290 | LumiPlus Connect Controller enables the total lighting control trough Fluidra Pool App while interconnecting lighting to the rest of Fluidra's connected devices providing fully control of the swimming pool.<br>Features:<br>- Total control and programming from any place in the world.<br>- Scheduling: Set your own schedules.<br>- Customize your own colours and colour changing scenes.<br>- Dimming: Light intensity control.<br>- Colour changing speed control.<br>- Voice control: Alexa compatible. | LumiPlus Connect projectors, Lumi-Plus Design RGB, LumiPLus Essential RGB, LumiPlus Mini and Micro SPA RGB projectors. |
| LUMIPLUS CONNECT W/TW REMOTE CONTROL | | 76291 | Remote controller for white, warm white or Tunable white LumiPlus Connect projectors. Ilt must work together with LumiPlus Connect controller and is great for users willing to complement the Fluidra Pool App experience with a remote controller. | Compatible with Lumiplus Connect white, warm white and tunable white projectors. LumiPlus Connect controller is needed. |
| LUMIPLUS CONNECT RGB/ RGBW REMOTE CONTROL | | 76292 | Remote controller for RGB or RGBW LumiPlus Connect projectors. Ilt must work together with LumiPlus Connect controller and is great for users willing to complement the Fluidra Pool App experience with a remote controller. | Compatible with Lumiplus Connect RGB and RGBW projectors. LumiPlus Connect controller is needed. |

# Control systems



SIMPLE

EASY POOL LIGHT CONTROL

SMART

LIGHTING UNDER CONTROL

EFFICIENT

THE MOST RELIABLE REMOTE CONTROL

## LUMIPLUS PLUG&PLAY

### LumiPlus Plug&Play

| System | | Code | Description | Projectors |
|---|---|---|---|---|
| LUMIPLUS PLUG&PLAY REMOTE CONTROL | | 74399 | LumiPlus Plug&Play remote controller is a very intuitive RGB control without further installation works in the electric cabinet or the technical room.<br>Features:<br>- 15 meters signal range.<br>- Dimming: Light intensity control.<br>- 12 colours.<br>- 8 colour changing sequences.<br>- 8 colour changing speeds. | LumiPlus Plug&Play lamps and projectors |

### LumiPlus Essential RGB controls

| System | | Code | Description | Projectors |
|---|---|---|---|---|
| LumiPlus RGB ECO | | 32458 | LumiPlus RGB ECO is a normally closed push-button switch that can control lights in a 14 modes of operation: 7 still colours and 7 colour changing sequences. Each time the push button is pressed, the next mode is set. | LumiPlus Essential projectors, LumiPlus Design RGB, LumiPlus Mini SPA and Micro SPA RGB projectors |
| LumiPlus RC1100 remote controller | | 75773 | LumiPlus RC1100 remote controller enables to control the RGB RC1100 projectors wireless.<br>Features:<br>- 12 colours.<br>- 8 colour changing sequences.<br>- 8 colour changing speeds.<br>- 5 meters signal range. | LumiPlus Essential RGB RC1100 lamps and projectors |
| LumiPlus Range Extender | | 64633 | Extends the signal that the LumiPlus Controlfor the RC1100 remote controller. Ideal for facilities whose architectural features or type of installation needs the remote's RC1100 to be stronger. Together with remote controller RC1100 can control and synchronize up to 3 Essential RGB projectors. | Compatible with RC1100 remote controller. |

# NEW EU REGULATION*

SINCE 1ST SEPTEMBER 2021

According to the eco-design regulation, the swimming pool halogen lights can no longer be sold in the European Union market.

## We are your LED's best partner

With our LED solutions for swimming pools, we'll make it easy for you and your customers.

MADE IN EUROPE

100% production in our own facilities

APPROVED QUALITY

360° continuous control from suppliers and ISO certifications to finished products

BUILT BY POOL EXPERTS

More than 15 years of R&D experience to design, inject and test watertight solutions

* EU Regulation 2019/2020 (Ecodesign requirements for light sources), halogen lights for swimming pools can no longer be sold in the EU countries. This also applies to the United Kingdom and Qatar.

ASTRALPOOL

# Lamps

According to UE Regulation 2019/2020, from September 1st, 2021 halogen cannot be sold anymore on the European Union market. This is also valid in other countries such as UK and Qatar.

## TECHNICAL FEATURES

**Lamps for lights**

| Type of lamp | | Code | Consumption |
|---|---|---|---|
| Halogen PAR56 | For lights with niche | 00370/1 | 300W (12 V) |
| Dichroic GX-5.3 | For mini lights | 19334 | 50W (12 V) |



# Standard light

According to UE Regulation 2019/2020, from September 1st, 2021 halogen cannot be sold anymore on the European Union market. This is also valid in other countries such as UK and Qatar.

## DESCRIPTION

PAR56 projector including a 300W 12V AC halogen lamp.

The projector must be always be submerged in water.

## TECHNICAL FEATURES

**Standard light**

| Type of pool | Cable 2x6 mm² 2.5 m | Type of decorative ring Ø280 mm | | Consumption | Niche included |
|---|---|---|---|---|---|
| | | ABS | S.S. | | |
| | Yes | 11279* | | 300W (300 VA) | No |
| Concrete | Yes | 07844** | 07843** | | Yes |
| Polyester | Yes | 07856** | 07855** | | |

Rated voltage: 12 V AC. Protection rating: IP68.

* Niche not included. Compatible with Ø230 mm niches.

** Niche included.

HALOGEN LIGHTING

# Mini light

**According to UE Regulation 2019/2020, from September 1st, 2021 halogen cannot be sold anymore on the European Union market. This is also valid in other countries such as UK and Qatar.**

## DESCRIPTION

Fast assembly Mini projector including a GX-5.3 50W 12V AC aluminized halogen lamp.

The projector must be always be submerged in water.

## TECHNICAL FEATURES

### Fast assembly Mini light

| | Body | Type of decorative ring Ø96 mm | | Consumption | Fixing |
|---|---|---|---|---|---|
| | | ABS | S.S. | | |
| | Plastic | 33708 | | 50W (50 VA) | Ø63 wall conduit or wall bushing |
| | Metal | 33684 | 36641 | | |

Rated voltage: 12V AC. IP68 protection. Includes 2.5 m H07RN-F 2 x 1.5 mm² cable.
Compatible with wall bushing 15661.

### Mini light for Spa

| | Body | Type of decorative ring Ø96 mm | | Consumption | Fixing |
|---|---|---|---|---|---|
| | | ABS | S.S. | | |
| | Plastic | 33709 | | 50W (50 VA) | Threaded body and 2" nut |
| | Metal | 33685 | 36642 | | |

Rated voltage: 12 V AC. Protection rating: IPX8. Includes 2.5-m H07RN-F 2 x 1.5 mm² cable.

### Mini light for Mini Niche (Light spot)

| | Type of pool | Body | Type of decorative ring Ø163mm | | Consumption | Fixing | Niche included |
|---|---|---|---|---|---|---|---|
| | | | ABS | S.S. | | | |
| | | Metal | 49822* | 49823* | 50W (50 VA) | Mini niche | No |
| | Concrete | | 33686** | | | | |
| | Polyester | | 33687** | | | | |

Rated voltage: 12V AC. IP68 protection. Includes 2.5 m H07RN-F 2 x 1.5 mm² cable.
* Compatible with Mini niche (not included). Select the appropriate option for each pool (see page 187)

# UNIK connection box

75971CL090

75971

75971CL144

75971CL129

## DESCRIPTION

Manufactured in ABS, with a cover designed to be integrated in the pool surroundings.

Compatible to install in a Ø50 tube or hose.

All threaded connections are M-25 and can be manipulated after its installation.

| | Code | Standard Pack | Standard weight in kg | Standard volume in m³ |
|---|---|---|---|---|
| White | 75971 | 8 | 4.65 | 0 030 |
| Beige | 75971CL090 | 8 | 4.65 | 0 030 |
| Light Grey | 75971CL129 | 8 | 4.65 | 0 030 |
| Anthracite | 75971CL144 | 8 | 4.65 | 0 030 |

# Connection box

75972CL090

75972

75972CL144

75972CL129

## DESCRIPTION

Manufactured in ABS.

Compatible to install in a Ø50 tube or hose.

All threaded connections are M-25 and can be manipulated after its installation.

| | Code | Standard Pack | Standard weight in kg | Standard volume in m³ |
|---|---|---|---|---|
| White | 75972 | 8 | 3.8 | 0 030 |
| Beige | 75972CL090 | 8 | 3.8 | 0 030 |
| Light Grey | 75972CL129 | 8 | 3.8 | 0 030 |
| Anthracite | 75972CL144 | 8 | 3.8 | 0 030 |

# Connection box

## DESCRIPTION

In AISI-316 stainless steel. Two PG 15 thread side outlets with two PG16 to M25 converters.

¾" BSP threaded bottom connection.

| | Code | Standard Pack | Standard weight in kg | Standard volume in m³ |
|---|---|---|---|---|
| Connection box | 00393 | 1 | 0.21 | 0 002 |

NICHES

# Standard niches

## DESCRIPTION

Ø230 mm diameter.

Compatible with LumiPlus FlexiNiche and PAR56 projectors.

## TECHNICAL FEATURES

| Niches | | | | |
|---|---|---|---|---|
| Concrete pools | Fibreglass / liner pools | | Panel pools | |
| | With inserts | Without inserts | With inserts | Without inserts |
| 00349 | 00364 | 28887 | 23671 | 23670 |
| | 17805 | 72261 | | |

# AISI-316L stainless steel niches

## DESCRIPTION

Ø230 mm diameter.

Compatible with LumiPlus FlexiNiche full stainless steel projectors.

## TECHNICAL FEATURES

| AISI-36 stainless steel niches | |
|---|---|
| Concrete pools | Liner pools |
| 54102 | 54103 |

# PS niches

## DESCRIPTION

Ø230 mm diameter.

Brass cable gland.

Compatible with LumiPlus FlexiNiche and PAR56 projectors.

## TECHNICAL FEATURES

| PS niches | | |
|---|---|---|
| Concrete pools | Fibreglass / liner pools | |
| | With inserts | Without inserts |
| 00355 | - | 00367 |

Seawater-proof

# Ø180mm diameter niches

## DESCRIPTION

Compatible with LumiPlus FlexiNiche and Design projectors.

## TECHNICAL FEATURES

| Niches | | | |
|---|---|---|---|
| Concrete pool | Prefabricated pools | | Fixation kit to adapt LumiPlus Design to other 180mm niches |
| | With inserts | Without inserts | |
| 59813 | 59814 | 59815 | 59818* |

* Fitting kit to make LumiPlus Design compatible to the majority of the niches from Ø180 to Ø190 mm in the market (Hugo Lahme, MTS Produckts, Wibre...).

# Mini niches

## DESCRIPTION

Compatible with LumiPlus FlexiMini Niche and LumiPlus Essential Mini Niche projectors.

## TECHNICAL FEATURES

| MINI niches | | |
|---|---|---|
| Concrete pools | Fibreglass / liner pools | Panel pools |
| 06967 | 00369 | 49828 |

# Mini niche with integrated nozzle

## DESCRIPTION

53956: Compatible with the LumiPlus FlexiMini Pipe, LumiPlus Essential Mini quick coupling and LumiPlus Essential Rapid.

59983: Compatible with LumiPlus FlexiRapid, LumiPlus FlexiMini Nozzle L and LumiPlus Essential Rapid.

## TECHNICAL FEATURES

| Mini niche with integrated nozzle for fast assembly Mini projectors | |
|---|---|
| Concrete pools | Fibreglass / liner pools |
| 53956 | 59983 |

ZODIAC®

# NL NICHELESS LED LIGHTS

## EASY-TO-INSTALL, ECO-FRIENDLY LIGHTING

Pool lighting is an essential asset for enhancing your pool.
**Zodiac® NL LED lights** enable you to achieve this and they are both **energy saving and easy to install.**
They are installed during the construction stage and enhance all pool types, **using innovative, obstruction-free technology.**

## > LED LIGHTING: AN ENERGY-SAVING INNOVATION

**Energy efficient:** powerful lighting with an **energy saving of up to 90%** (compared to incandescent or halogen spotlights).

**Long lasting: they last up to 10 times longer** than traditional incandescent light bulbs.

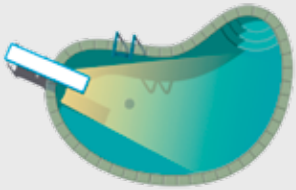

1 classic spotlight
Total consumption: 300 W
Annual cost = €37

Higher performance lighting > ENERGY SAVING 90%

Calculation based on 4h/day Use throughout the season (6 months) at a price of €0 1694 / kWh (average price witn VAT in France)

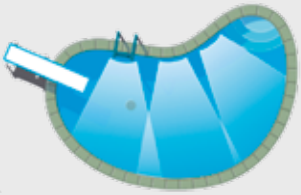

3 12 W NL LED lights
Total consumption: 27 W
Annual cost = 9 €

## > "NICHELESS" INSTALLATION: INSTALLED ANYWHERE, QUICKLY AND EASILY!

**Quickly & easily:** With Zodiac® NL LED lights, there's no need to build a niche, they slot directly into a standard 1.5" wall fitting and are compatible with all pool surfaces (liner/PVC, concrete, polyester, etc.).

**Compact:** They integrate perfectly into the pool, adding to its aesthetic appeal and are compatible with all pool cleaners (no obstructions jutting out from the wall).

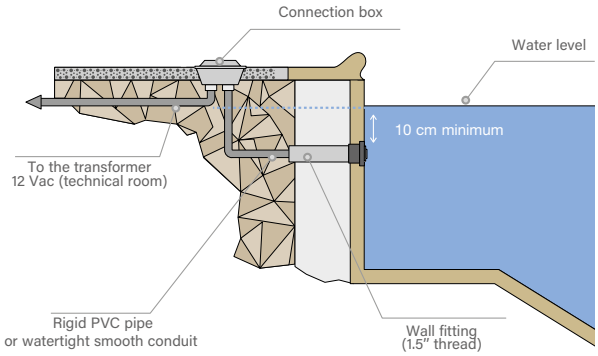


## > COMPACT AND POWERFULL LIGHTS: CUSTOMISABLE AMBIANCE LIGHTING!

Freedom and creativity: NL LED lights offer **a wide range of set colors and ambiance lighting** thanks to their RGBW technology.

A sophisticated and relaxing atmosphere

An electric atmosphere with over 1,500 constantly changing colors

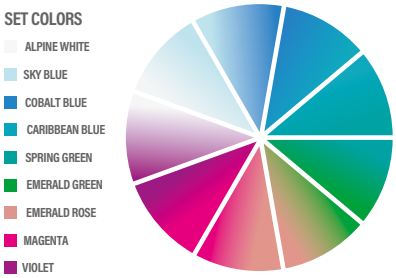


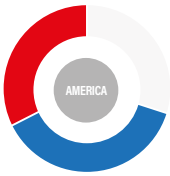


A star-shaped light show in red, white and blue

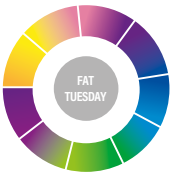


A carnival atmosphere with a 32-color display

A night brought to life by hundreds of colors

FLUIDRA POOL

**Simple to use:** 100% compatible with Zodiac® eXO® iQ smart salt water chlorinators (LS and standard versions), Hydroxinator® iQ and with Command Connect cabinet through Fluidra Pool App.

### DID YOU KNOW?

**WITH RGBW LED, THERE'S NO NEED TO CHOOSE BETWEEN WHITE AND COLOR!**
Zodiac® NL LED lights are innovative, using RGBW technology (Red-Green-Blue-White) to add white to all 3 primary colors. This enables you to generate an infinite color pallet, with a more natural shade, or pure white lighting.

LED LIGHTINGS FOR POOL

# NL

- + Perfect integration for an enhanced pool
- + Powerfull Led lighting
- + Guaranteed energy savings

3 YEAR WARRANTY*

PROFESSIONAL ADVICE RECOMMENDED

EASY INTALLATION

TECHNOLOGY RGBW

Energy Efficient

FLUIDRA POOL

## ACCESSORIES INCLUDED IN THE PACK

| | |
|---|---|
| Installation tool | White & grey cosmetic rings |

## ASSOCIATED PRODUCTS

| Hydroxinator® iQ | eXO® iQ |
|---|---|
| WW000172/173/174/175 | WW000162/163/164/165/170/171 |

## PRODUCT REFERENCES

| NL | 6RGBW | 12RGBW | 24RGBW | 6BW | 12BW | 24BW |
|---|---|---|---|---|---|---|
| Standard Model | WT000233 | WT000234 | WT000235 | WT000236 | WT000237 | WT000238 |

## DESCRIPTION

| NL | 6RGBW | 12RGBW | 24RGBW | 6BW | 12BW | 24BW |
|---|---|---|---|---|---|---|
| Installation Compatibility | Pool outlet with 1,5" internal thread and whithout internal reduction ("suction cleaner" outlet type) | | | | | |
| Led Type | RGBW : color + white | | | Bright white | | |
| Operating Mode(s) | 9 fixed colors & 5 multicolor lighting ambiances | | | 1 fixed color : white | | |
| Color Choice* | Manual (on/off sequences)<br>Fluidra Pool App compatible when controlled by a Command Connect cabinet. | | | | | |
| Use | Fresh water and salt water up to 6 g/L (6000 ppm) | | | | | |

## TECHNICAL SPECIFICATIONS

| NL | 6RGBW | 12RGBW | 24RGBW | 6BW | 12BW | 24BW |
|---|---|---|---|---|---|---|
| Power | 6 W | 12 W | 24 W | 6 W | 12 W | 24 W |
| Max amperage (A) | 0.52 | 0.92 | 1.25 | 0.62 | 1.09 | 1.84 |
| Illuminated surface ($m^2$)** | 160 | 340 | 505 | 390 | 725 | 1180 |
| Luminous flux (Lumen) | 12 to 15 | 15 to 20 | 20 to 24 | 12 to 15 | 15 to 20 | 20 to 24 |
| Led lifespan *** | 10 000 h | | | | | |
| Protection rating | IP 68 | | | | | |
| Power supply | 12 VAC - 50/60 Hz | | | | | |
| Cable lenght | 3 m | | | | | |

## DIMENSIONS AND WEIGHT

| NL | 6RGBW | 12RGBW | 24RGBW | 6BW | 12BW | 24BW |
|---|---|---|---|---|---|---|
| External diameter (lens) | 49.6 mm | | | | | |
| Light body diameter | 36.7 mm | | | | | |
| Length A (without cable) | 118 mm | 143 mm | | 118 mm | 143 mm | |
| Weight (with cable) | 500 g | 520 g | | 500 g | 520 g | |

** For a light colored pool finish. Reduce illuminated surface by roughly 20% for dark pool finishes.
*** : Theoretical lifespan in hours, for information only.

LED LIGHTINGS FOR POOL

# Other LED solutions:

## PAR56 projectors, PAR56 lamps and Flat projectors

**PAR56 projectors**

MADE IN EUROPE

### DESCRIPTION

Aquasphere PAR56 retrofittable underwater lamp improves energy efficiency compared to the traditional 300 W halogen PAR56 lamps.

It must always be installed completely submerged.

Lifespan of 25000 h.

The RGB lamp is controlled by a remote control, which is included, with a 2 m range and can control 2 lamps. The White lamp does not include remote control.

To correctly light a pool it is advisable to install a light from this range every 15 m² of water surface.

Note: this recommendation applies to pools light in color with white light spotlights, but if there are RGB spotlights more should be fitted. In dark pools it is recommended to use more projectors per m².

Projectors PAR56 needs a niche (see page 186) to complete the installation. Surfaced mounted Flat projector is delivered with the accessories to be installed both in concrete and polyester pools.

Spare part kit 24765-0500 is needed to install the Flat projector to liner pools.

### TECHNICAL FEATURES

**PAR56 lamps**

| | Description | Light color | | Code | Consumption | Luminous flux |
|---|---|---|---|---|---|---|
| | Retrofit PAR56 lamps | White | E | 74939 | 11.5W (18VA) | 1300 lm |
| | | RGB | G | 71740 Works with remote control code 75828 (included). | 15 W (23 VA) | 900 lm |
| | | | | 75827 Works with remote control code 75828 (not included). | | |

Must be connected to a 12VAC safety transformer. IPX8 protection.

**Flat projectors**

| | Description | Light color | | Code | Consumption | Luminous flux |
|---|---|---|---|---|---|---|
| | Flat projectors | White | E | 74941 | 11.5W (18VA) | 1300 lm |
| | | RGB | G | 71744 Works with remote control code 75828 (included). | 15 W (23 VA) | 900 lm |
| | | | | 75830 Works with remote control code 75828 (not included). | | |

Must be connected to a 12VAC safety transformer. 2.5 m cable. IPX8 protection.

LED LIGHTINGS FOR POOL

# Other LED solutions:

## PAR56 projectors, PAR56 lamps and Flat projectors

### TECHNICAL FEATURES

**PAR56 projectors**

| | Description | Light color | | Embellisher | Code | Consumption | Luminous flux |
|---|---|---|---|---|---|---|---|
| | PAR56 projectors | White | E | White | 74940 | 11.5W (18VA) | 1300 lm |
| | | | | Beige | 74940CL090 | | |
| | | | | Light grey | 74940CL129 | | |
| | | | | Anthracite grey | 74940CL144 | | |

Must be connected to a 12VAC safety transformer. 2.5 m cable. IPX8 protection.

| | | | | | | | |
|---|---|---|---|---|---|---|---|
| | PAR56 projectors | RGB | G | White | 71742 | 15 W (23 VA) | 900 lm |
| | | | | Beige | 71742CL090 | | |
| | | | | Light grey | 71742CL129 | | |
| | | | | Anthracite grey | 71742CL144 | | |
| | | | Works with remote control code 75828 (included). | | | | |

Must be connected to a 12VAC safety transformer. 2.5 m cable. IPX8 protection.

| | | | | | | | |
|---|---|---|---|---|---|---|---|
| | PAR56 projectors | RGB | G | White | 75829 | 15 W (23 VA) | 900 lm |
| | | | | Beige | 75829CL090 | | |
| | | | | Light grey | 75829CL129 | | |
| | | | | Anthracite grey | 75829CL144 | | |
| | | | Works with remote control code 75828 (not included). | | | | |

Must be connected to a 12VAC safety transformer. 2.5 m cable. IPX8 protection.

# Niches guide

## Aquasphere

| TYPE OF INSTALLATION | TYPE OF PROJECTOR | TYPE OF POOL | | | | | | |
|---|---|---|---|---|---|---|---|---|
| | | CONCRETE | CONCRETE + LINER | | FIBREGLASS | | PANELS | |
| | | | with inserts | without inserts | with inserts | without inserts | with inserts | without inserts |
| | PAR56 Projector | 00349 | 00364 | 17805/28887 | 00364 | 72261/28887 | 23671 | 23670 |
| | Flat projector | Installation fittings are included with the projector | | | | | 71234 Liner pool adapter | |

# Aquasphere RGB controls

| | Code | Standard Pack | Standard weight in kg | Standard volume in m³ |
|---|---|---|---|---|
| Remote Controller | 75828 | 1 | - | - |

# Transformers for pool and fountain lighting

## DESCRIPTION

- Quick and easy installation.
- Connection via terminals protected against indirect contacts.
- Manufactured according to EN 61558 regulation and CE Marking Directives.
- IP-20 protection rating.
- Age-resistant housing.

| | Code | Standard Pack | Standard weight in kg | Standard volume in m³ |
|---|---|---|---|---|
| 100 VA 230 V to 12 V transformer | 00383-1369 | - | - | - |
| 300 VA 230 V to 12 V transformer | 00384-1369 | - | - | - |
| 600 VA 230 V to 12 V transformer | 00385-1369 | - | - | - |

# Transformers

## DESCRIPTION

- Manufactured according to EN 61558 regulation and CE Marking Directives.
- Quick and easy installation.
- Connection via terminals protected against indirect contacts.
- IP-20 protection rating.

| | Code | Standard Pack | Standard weight in kg | Standard volume in m³ |
|---|---|---|---|---|
| 130VA from 230V to 12V | 00383-4146 | 6 | 15.0 | 0 011 |
| 300VA from 230V to 12V | 71436 | 4 | 21.0 | 0 012 |
| 600VA from 230V to 12V | 00385-4146 | 2 | 19.0 | 0 012 |

Alternative transformer range, on enquiry.

# Encapsulated security

## transformer with IP-65 protection rating for pools

## DESCRIPTION

- Manufactured according to EN 61558 regulation and CE Marking Directives.
- IP-65 protection rating.
- Class II transformer. Total protection against all electric shocks.
- Self-extinguishing bodywork, as per IEC 695-2-1.

| | Code | Standard Pack | Standard weight in kg | Standard volume in m³ |
|---|---|---|---|---|
| 130 VA from 220-240 V to 12 V | 35807 | 1 | 3.2 | 0.02 |
| 400 VA from 220-240 V to 12-17 V | 35385 | 1 | 6.8 | 0.04 |
| 800 VA from 280-240 V to 12-17 V | 35386 | 1 | 10.4 | 0.04 |

# Transformer protection boxes

## DESCRIPTION

Made of zinc plated steel plate, painted finish.

| | Code | Standard Pack | Standard weight in kg | Standard volume in m³ |
|---|---|---|---|---|
| For transformer 00383 | 00386 | 1 | 1.15 | 0.01 |
| For transformer 00384 | 00387 | 1 | 1.57 | 0.01 |
| For transformer 00385 | 00388 | 1 | 3.00 | 0.01 |

# Flexible conduit hose

## DESCRIPTION

Cable conduit to link the light's niche with the connection box, length 1m hose, length 1 m hose.

| | Code | Standard Pack | Standard weight in kg | Standard volume in m³ |
|---|---|---|---|---|
| Threaded ends 3/4" & M25 | 28138 | 1 | - | - |
| M-25 socket joint | 10892-0404 | 1 | - | - |
| Threaded ends 3/4" and M26 150 cm | 28138-150 | 1 | - | - |

# Cable roll H07RN-F

| | Code | Standard Pack | Standard weight in kg | Standard volume in m³ |
|---|---|---|---|---|
| **1.5 mm²** | | | | |
| Cable 2x1.5mm² - 5m. | 74652 | 1 | - | 0.01 |
| Cable 2x1.5mm² - 10m. | 74656 | 1 | - | 0.01 |
| Cable 2x1.5mm² - 15m. | 74657 | 1 | - | 0.01 |
| Cable 2x1.5mm² - 20m. | 74658 | 1 | - | 0.01 |
| Cable 2x1.5mm² - 25m. | 74659 | 1 | - | 0.01 |
| Cable 2x1.5mm² - 30m. | 74673 | 1 | - | 0.01 |
| **2.5 mm²** | | | | |
| Cable 2x2.5mm² - 10m. | 71645 | 1 | - | 0.01 |
| Cable 2x2.5mm² - 15m. | 71646 | 1 | - | 0.01 |
| Cable 2x2.5mm² - 20m. | 71647 | 1 | - | 0.01 |
| Cable 2x2.5mm² - 25m. | 71648 | 1 | - | 0.01 |
| Cable 2x2.5mm² - 30m. | 71649 | 1 | - | 0.01 |
| **6 mm²** | | | | |
| Cable 2x6mm² - 100m | 15264 | 1 | 187.5 | - |

# Underwater connection kit

## DESCRIPTION

The kit has all the necessary components to carry out any watertight connection. Due to the properties of the product, the resin seals all gaps. Maximum safety, easy installation, in 2 hours it is ready to be submerged.

| | Code | Standard Pack | Standard weight in kg | Standard volume in m³ |
|---|---|---|---|---|
| Kit for Ø 13 to 15 mm cables | 32803 | 1 | 0.3 | 0 002 |
| Kit for Ø 8 to 12 mm cables | 35661 | 1 | 0.3 | 0 002 |

# Underwater connector

## with IP68 protection rating and 4 poles

## DESCRIPTION

Includes 5 connectors and two wrenches. Connector's dimensions: 68mm length x 23mm diameter.

| | Code | Standard Pack | Standard weight in kg | Standard volume in m³ |
|---|---|---|---|---|
| IP68 connector | 71318 | 24 | 4.2 | 0.3 |

# Aquarmony Loudspeaker

## DESCRIPTION

With frontal installation. To listen to music and voice underwater creating a magical and different atmosphere. Aquarmony is a sealed waterproof loudspeaker designed for your pool. It is made of high quality components, innovative technology and with an assembly system assuring a correct operation in salt water or with a high Chlorine content. Easy installation.

| | Code | Standard Pack | Standard weight in kg | Standard volume in $m^3$ |
|---|---|---|---|---|
| Aquarmony Loudspeaker | 25680 | - | - | - |
| Niche for concrete pool | 00349 | - | - | - |
| Niche for liner pool | 00364 | - | - | - |

Note: The niches come with a stuffing box assembly and a 1.5-m cable grommet specially designed for the Aquarmony range

## TECHNICAL FEATURES

| | |
|---|---|
| Maximum power | 60 W |
| Impedance | 4 ohm |
| Frequency | 200-12000 Hz |
| Maximum area per loudspeaker | 80 $m^2$ |
| Maximum installation depth | 40 cm |
| Weight | 5 Kg |
| Cable length supplied | 5 m |

# Amplifier and loudspeakers

## KITMEZZO322A2 / KITMEZZO324A4

## DESCRIPTION

**KITMEZZ0322A2** -
Amplification system to connect up to a maximum of 2 underwater speakers already configured.

- 2-channel amplifier.
- Analog inputs on Euroblock and on 3.5mm stereo jack, outputs on Euroblock.
- DSP control via ethernet.
- Dimensions 210 x 275 x 40.
- Weight 2,6 Kg.
- 4 x 160W
- Impedance: 4 Ohm - 8 Ohm
- Complete with 2 double insulated audio transformers

**KITMEZZO324A4**-
Amplification system to connect up to a maximum of 4 underwater speakers already configured.

- 2-channel amplifier.
- Analog inputs on Euroblock and on 3.5mm stereo jack, outputs on Euroblock.
- DSP control via ethernet.
- Dimensions 210 x 275 x 40.
- Weight 2,6 Kg.
- 4 x 80W
- Impedance: 4 Ohm - 8 Ohm
- Complete with 4 double insulated audio transformers

| | Code | Standard Pack | Standard weight in kg | Standard volume in $m^3$ |
|---|---|---|---|---|
| Amplifier and loudspeakers | KITMEZZ0322A2 | - | - | - |
| Amplifier and loudspeakers | KITMEZZO324A4 | - | - | - |

# Outdoor lighting

## Starlight portable lights

### DESCRIPTION

Energy Efficient

Decorative lights for indoors and out and even for floating in the water. Includes a remote control for choosing one of the 16 different colours available. They work on low consumption LED technology and once the battery has been charged have a runtime of up to 20 hours. Starlight is water-resistant The charger is supplied with the product.

| | | Code | Standard Pack | Standard weight in kg | Standard volume in m³ |
|---|---|---|---|---|---|
| **StarLight Altair** | | | | | |
| | Conical shape 290 x 320 mm | 53937 | 1 | 3 | 0 050 |
| **StarLight Sirio** | | | | | |
| | Circle shape Ø 350 mm | 53938 | 1 | 3 | 0 051 |
| **StarLight Vega** | | | | | |
| | Oval shape 350 x 270 mm | 53939 | 1 | 3 | 0 051 |

*Until end of stocks*

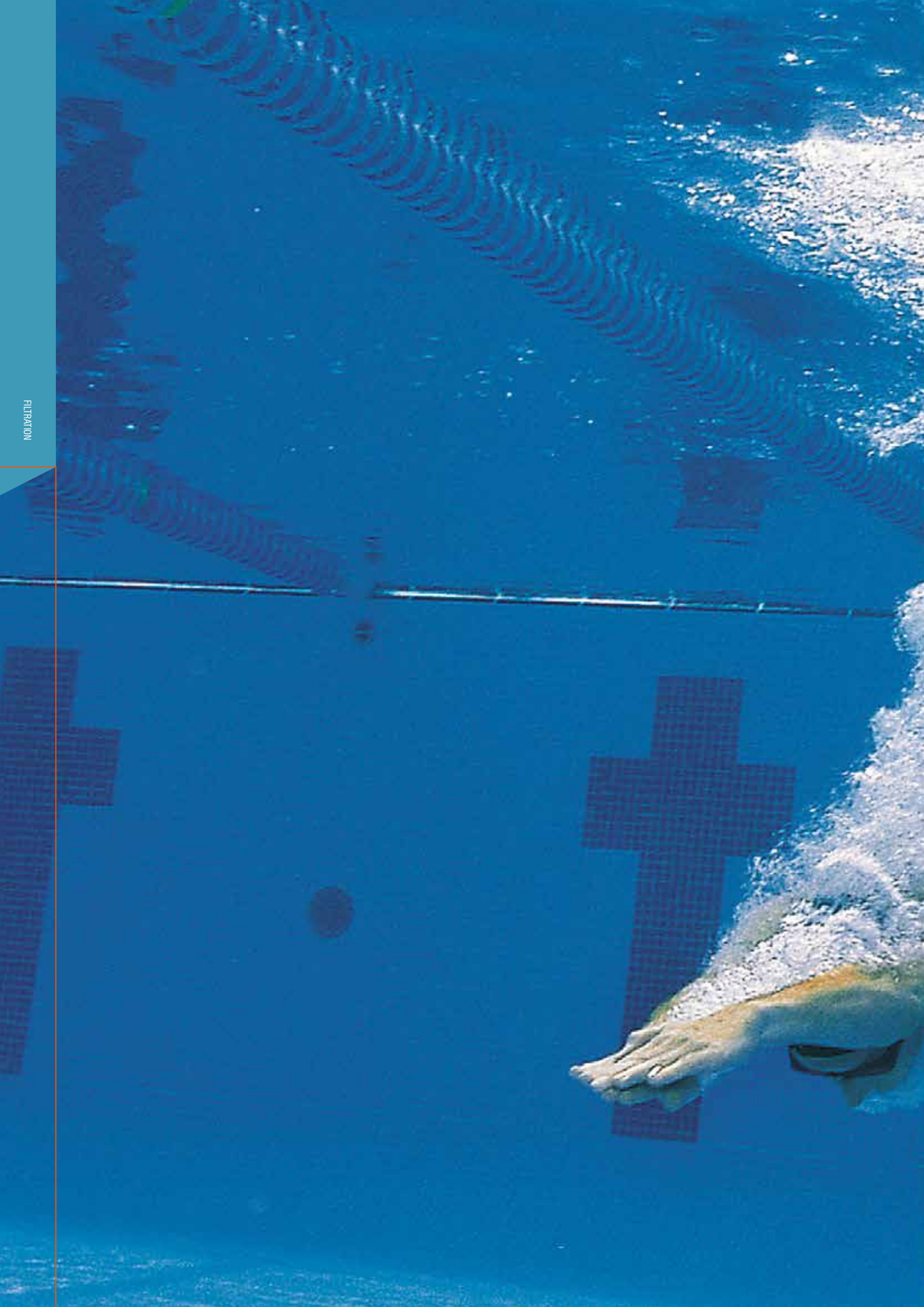

# FILTRATION

ASTRALPOOL


198 FILTER FEATURES AND SELECTION

200 INJECTION MOULDED SAND FILTERS
- 200 Cantabric
- 201 Ronda Pro

202 LAMINATED SAND FILTERS
- 202 Atlas
- 203 Europe Pro
- 203 Europe Pro Long
- 204 RapidPool
- 205 Aster
- 206 Vesubio

207 BLOW-MOULDED SAND FILTERS
- 207 Millennium

208 BOBBIN-WOUND SAND FILTERS
- 208 Berlin

209 HIGH PERFORMANCE LAMINATED SAND FILTERS
- 209 Delta 1000
- 210 Delta 1200
- 211 Artic Plus
- 211 Artic
- 213 Aster Side - High filtration
- 214 Norma

215 FILTRATION MEDIA

217 MULTIPORT VALVES

225 CARTRIDGE FILTERS
- 225 Viron
- 226 Nanofiber

227 DIATOMACEOUS FILTERS
- 227 Clarity

227 OC-1 FILTERS
- 227 Aster OC-1

228 MONOBLOCKS
- 228 Galactic
- 229 SkyPool

230 COMPACTS WITH INTERIOR INSTALLATION
- 230 Ramses
- 230 Ramses Up

231 COMPACTS WITHOUT INTERIOR INSTALLATION

232 PRE-FILTERS
- 232 Hydrospin

233 ACCESSORIES FOR FILTRATION AND PARTS


ZODIAC®


237 LAMINATED SAND FILTERS
- 237 MS

239 CARTRIDGE FILTERS
- 239 CS

241 FILTRATION MEDIA
- 241 Crystal Clear

# FILTER SELECTION GUIDE

## HOW DO YOU SELECT THE FILTER THAT YOU NEED?

A key factor in cleaning pool water is its passage through the filter. This process works in a fully closed circuit. The quality and type of filter are therefore two decisive aspects so that when the water circulates through the system it comes out completely clear.

A filter should be selected based on the following criteria:

1. **Type of filter medium.** This is a basic decision for setting the level of water clarity, characteristics of use and maintenance.
2. **Tank manufacture technology.** This directly affects its resistance, durability and quality of finish.
3. **Flow rate** ($m^3/h$). Set according to the volume and recirculation time of each pool. Ensure that this matches the recommended flow rate when selecting the pump.
4. **Features and added extras**.

Remember to always check the space available in your facility to both access and run the filter once selected.

Aster Filter

### THERE ARE 3 MAIN TYPES OF FILTER

#### DIATOMACEOUS EARTH FILTERS

Filtration method that delivers maximum filtration fineness. However, this system requires more time for maintenance.

- Excellent filtration quality
- Compact solution
- Expert installation and maintenance

#### CARTRIDGE FILTERS

One or more cartridges are used to deliver a high level of filtration fineness. This is also the ideal solution when there are restrictions on space, water consumption and water for filter backwashing.

- Very good filtration quality
- Low water consumption
- Compact solution

#### MEDIA FILTERS

Commonly called **sand filters**, as this is the most widely used filter medium in this type of filter. Other media can be used, such as glass and anthracite, which optimize their performance.

To obtain maximum filtration quality and performance, use filters with the highest filter bed, several layers of filter media and a low filtration speed.

- Robust technology with a great capacity for recovering unkempt water
- Easy to use and maintain
- Value for money

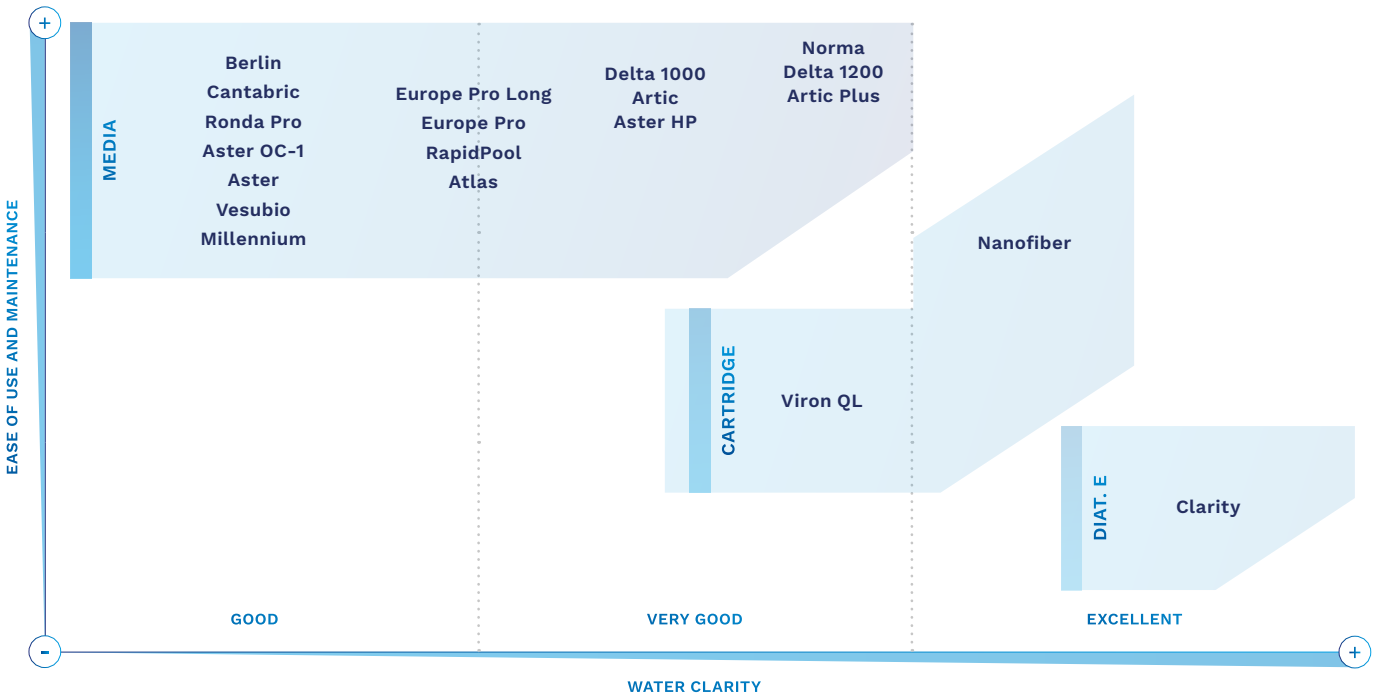

## FILTER FEATURES AND SELECTION

| FILTER | | TANK | PRODUCT FEATURES | | | | | | |
|---|---|---|---|---|---|---|---|---|---|
| | | Material and technology | Rob. & durab.* | Flow m³/h | Diameter | Filtration quality | Connections | Warranty (t/c)** | Other |
| DIAT. E | Clarity | Polyester + FG Laminated | 5 | 11-27 | 610 | 5 | 1½"-2" Lateral | 2/2 | Excellent filtration quality. Durability and reliability of body and components. |
| CARTRIDGE | Nanofiber | Injection-molded thermoplastic | 3 | 10-18 | 402 | 5 | 2" Lateral | 5/2 | Single nanofiber cartridge filter and excellent filtration quality. Manual and automatic backwash using the multiport valve. |
| CARTRIDGE | Viron QL | Injection-molded thermoplastic | 3 | < 30 | 690 | 4 | D50 | 5/2 | Multi-cartridge filter. Long period between each cleaning of cartridges. |
| BED OF MEDIA | Cantabric | Injection-molded thermoplastic | 4 | 6-30 | 400-900 | 2 | 1½"-2½" Lateral/ Top | 10/2 | A flagship in filtration for residential pools. High quality and design for good performance over time. |
| BED OF MEDIA | Ronda Pro | Injection-molded thermoplastic | 4 | 6-14 | 400-600 | 2 | 1½" Lateral | 5/3 | Easy to install and maintain with full access. A high quality filter designed for professionals that includes adjustable manometer, fast drainage, handles and an efficient & quick to connect multiport valve. |
| BED OF MEDIA | Berlin | Polyester + FG Bobbin-wound | 6 | 9-56 | 500-1,200 | 2 | 1½"-D90 Lateral | 2/2 | Extraordinary reliability and durability due to its dual-layer body. Large cover in diameter to facilitate access. |
| BED OF MEDIA | Norma | Polyester + FG Laminated | 5 | 10-34 | 650-1,200 | 4 | D75-D140 Lateral | 2/2 | High performance in residential pools. Filter bed height of 1.2 m. Wide range of added extras and accessories. |
| BED OF MEDIA | Delta 1200 | Polyester + FG Laminated | 5 | 13-45 | 650-1,200 | 4 | 1½"-D90 Lateral | 2/2 | High performance in residential pools. Filter bed height of 1.2 m. Wide range of added extras and accessories. |
| BED OF MEDIA | Artic Plus | Polyester + FG Laminated | 5 | 16-56 | 650-1,200 | 4 | 1½"-4" Lateral | 2/2 | High performance in residential pools. Filter bed height of 1.2 m. Wide range of added extras and accessories. |
| BED OF MEDIA | Delta 1000 | Polyester + FG Laminated | 5 | 8-45 | 500-1,200 | 4 | 1½"-D90 Lateral | 2/2 | High performance in residential pools. Filter bed height of 1.0m. Wide range of added extras and accessories. |
| BED OF MEDIA | Artic | Polyester + FG Laminated | 5 | 9-56 | 500-1,200 | 4 | 1½"-4" Lateral | 2/2 | High performance in residential pools. Filter bed height of 1.0m. Wide range of added extras and accessories. |
| BED OF MEDIA | Aster HP | Polyester + FG Laminated | 5 | 9-31 | 500-900 | 4 | 1½"-2½" Lateral | 2/2 | Filter bed height of 0.8 m in all models with collector arms. Filter bed height of 0.6m in all models with nozzle plates. |
| BED OF MEDIA | Atlas | Polyester + FG Laminated | 6 | 9-30 | 500-900 | 3 | 1½"-2½" Lateral | 10/2 | Top quality and features in its category. Filter designed for the most exacting professionals. |
| BED OF MEDIA | Europe Pro Long | Polyester + FG Laminated | 5 | 9-30 | 500-900 | 3 | 1½"-2½" Lateral | 2/2 | Easy to access thanks to its large cover in diameter. Transparent or polyester cover as options. |
| BED OF MEDIA | Europe Pro | Polyester + FG Laminated | 5 | 9-30 | 500-900 | 3 | 1½"-2½" Lateral | 2/2 | Easy to access thanks to its large cover in diameter. Transparent or polyester cover as options. |
| BED OF MEDIA | RapidPool | Polyester + FG Laminated | 5 | 6-24 | 400-800 | 5 | 1½"-2" Lateral | 2/2 | Rapid access cover. No need for tools to access inside. |
| BED OF MEDIA | Aster | Polyester + FG Laminated | 5 | 5-31 | 350-900 | 2 | 1½"-2½" Lateral/ Top | 2/2 | A classic in AstralPool's filtration with the widest range of choices. Robustness, user friendliness and reliability all in one. |
| BED OF MEDIA | Aster OC-1 | Polyester + FG Laminated | 5 | 8-32 | 450-900 | 2 | 1½"-2½" Lateral | 2/2 | Filter specially designed for the cutting-edge medium, OC-1. Saves energy, water and time spent on maintenance. |
| BED OF MEDIA | Vesubio | Polyester + FG Laminated | 5 | 8-32 | 450-900 | 2 | 1½"-2½" Lateral/ Top | 2/2 | Excellent value for money in its category. A laminated filter suitable for any size of pool. |
| BED OF MEDIA | Millennium | **Blow-molded thermoplastic** | 2 | 6-17 | 380-660 | 2 | 1½" Lateral/ Top | 2/2 | Magnificent finish and resistance in the category of blow-molded filters. Cover all your filtration requirements with the Millennium monobloc. |

· All media filters in this table can work equally with sand or glass, except for the Aster OC-1 range.

· Performance based on internal tests and comparisons.

* Robustness and durability

** Warranty for tank / components

# Cantabric

**Optional:**
**Standard American sizes**

- Injection-moulded filter in technical plastics.
- Thermal-welded tank with 10 years warranty.
- Fitted with a pressure gauge and manual water and air purge valves.
- Selector valve included.
- Maximum filtration speed (50 m³/h/m²).
- Maximum working pressure: 2.5 kg/cm².
- Sand and glass compatible (see page 215).
- Complies with filtration requirements as per standard EN 16713-1.

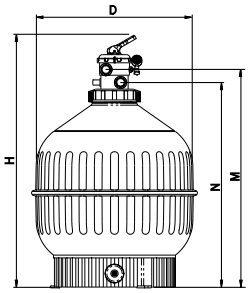


## Cantabric top filter

### DESCRIPTION

Top mounted multiport valve. Threaded filter locking ring in ABS.

| | Code | Standard Pack | Standard weight in kg | Standard volume in m³ |
|---|---|---|---|---|
| 6000 l/h Ø 400 mm outlet 1½" | 22399 | 1 | 10.7 | 0.23 |
| 9000 l/h Ø 500 mm outlet 1½" | 15780 | 1 | 17.5 | 0.37 |
| 14000 l/h Ø 600 mm outlet 1½" | 15781 | 1 | 19.9 | 0.49 |
| 21000 l/h Ø 750 mm outlet 1½" | 20128 | 1 | 30.4 | 0.83 |
| 21000 l/h Ø 750 mm outlet 2" | 23866 | 1 | 32.1 | 0.83 |

## Side mounted Cantabric filter

### DESCRIPTION

Clear lid & threaded locking ring in ABS, supplied with side mounted multiport valve.

Complies with Standard EN 16713-01

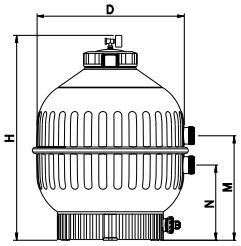


| | Code | Standard Pack | Standard weight in kg | Standard volume in m³ |
|---|---|---|---|---|
| **With multiport side valve** | | | | |
| 6.000 l/h Ø 400 mm outlet 1½" | 22398 | 1 | 9.0 | 0.15 |
| 9,000 l/h Ø 500 mm outlet 1½" | 15782 | 1 | 15.8 | 0.29 |
| 14,000 l/h Ø 600 mm outlet 1½" | 15783 | 1 | 17.8 | 0.40 |
| 21,000 l/h Ø 750 mm outlet 2" | 15784 | 1 | 29.0 | 0.67 |
| **Without multiport valve** | | | | |
| 30,000 l/h Ø 900 mm outlet 2½" | 22402 | 1 | 49.0 | 1.30 |

### TECHNICAL FEATURES

| | Top mounted | | | | | Side mounted | | | | |
|---|---|---|---|---|---|---|---|---|---|---|
| | 22399 | 15780 | 15781 | 20128 | 23866 | 22398 | 15782 | 15783 | 15784 | 22402 |
| Ø D (mm) | 400 | 500 | 600 | 750 | 750 | 400 | 500 | 600 | 750 | 900 |
| H (mm) | 894 | 1009 | 1069 | 1239 | 1250 | 715 | 800 | 875 | 1045 | 1215 |
| M (mm) | 744 | 829 | 894 | 1064 | 1098 | 380 | 415 | 445 | 575 | 675 |
| N (mm) | 680 | 765 | 830 | 1000 | 1023 | 255 | 290 | 320 | 345 | 405 |
| Connections | 1½" | 1½" | 1½" | 1½" | 2" | 1½" | 1½" | 1½" | 2" | 2½" |
| Flow rate (m³/h) | 6 | 9 | 14 | 21 | 21 | 6 | 9 | 14 | 21 | 30 |
| Approx. pool volume (m³) (8 hours)* | 48 | 72 | 112 | 168 | 168 | 48 | 72 | 112 | 168 | 240 |
| Sand load (kg) | 60 | 100 | 150 | 300 | 300 | 60 | 100 | 150 | 300 | 550 |
| Grade 1 glass load (57011) (kg) | 50 | 88 | 100 | 200 | 200 | 50 | 88 | 100 | 200 | 375 |
| Grade 3 glass load (57013) (kg) | 0 | 0 | 25 | 50 | 50 | 0 | 0 | 25 | 50 | 100 |
| Net weight (kg) | 8 | 14 | 15 | 23 | 25 | 7 | 12 | 14 | 24 | 34 |
| Package volume (m³) | 0.2 | 0.37 | 0.49 | 0.83 | 0.83 | 0.15 | 0.29 | 0.4 | 0.67 | 1.3 |

Fitted with sand dump port of Ø 2" in Ø 750 mm & Ø 900 mm models, and of 1½" in Ø 400, Ø 500 & Ø 600 mm models.
* 8 hours turnover rate.

INJECTION MOULDED SAND FILTERS

# Ronda Pro

Complies with Standard EN 16713-01

## DESCRIPTION

Range of injected filters to be used with media; such as glass or sand, among others, designed for professionals and characterized by:

- Embedded handles for transportation.
- Full access for an easy installation and maintenance.
- Efficient with low pressure drop & "quick connect" multiport valve.
- Adjustable manometer with glycerin for an optimal control of the filter clogging.
- ¾" water purge for a fast drainage.
- Superior quality and 5 years warranty for the tank.

| | Code | Standard Pack | Standard weight in kg | Standard volume in m³ |
|---|---|---|---|---|
| **With multiport side valve** | | | | |
| 6.000 l/h Ø 400 outlet 1"1/2 | 76212 | 1 | 13 | 0.23 |
| 9.000 l/h Ø 500 outlet 1"1/2 | 76213 | 1 | 19 | 0.34 |
| 14.000 l/h Ø 600 outlet 1"1/2 | 76214 | 1 | 24 | 0.47 |

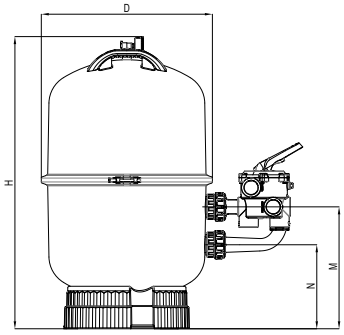


## TECHNICAL FEATURES

| | Side mounted | | |
|---|---|---|---|
| | 76212 | 76213 | 76214 |
| Ø D (mm) | 400 | 500 | 600 |
| H (mm) | 770 | 962 | 972 |
| M (mm) | 399 | 402 | 436 |
| N (mm) | 214 | 277 | 311 |
| Connections | 1"1/2 | 1"1/2 | 1"1/2 |
| Flow rate (m³/h) | 6 | 9 | 14 |
| Aprox. Pool volume (m³) (8hours)* | 48 | 72 | 112 |
| Sand load (kg) | 50 | 100 | 125 |
| Glass load (kg) | 40 | 80 | 100 |
| Net weith (kg) | 12 | 17 | 21 |
| Package volume (m³) | 0,23 | 0,35 | 0,48 |

* 8 hours turnover rate.

# Atlas

- **Filters manufactured in fibreglass and polyester resin.**
- **With a gelcoat external finish. As a result, the body is highly resistant, durable and has an excellent finish.**
- **Internal components and accessories in high quality engineering plastics.**
- **Compatible with sand and glass, among others (see page 215).**
- **They comply with filtration requirements as per standard EN 16713-1.**

# Atlas filter

## DESCRIPTION

Sand and glass filters, among others, made from reinforced polyester. Complies with filtration requirements as per standard EN 16713-1.

**Technical features:**

- Made of polyester resin and fibreglass.
- Excellent finish with gel-coat colour RAL 8029.
- The filter has been designed with higher coefficient of security, to guarantee a perfect operation.
- The union of the two bodies of the filter is carried out through a seal specially reinforced with fibreglass and polyester resin.
- Transparent plastic cover highly resistant to chemicals.
- High reliability screw-in cover.
- Fitted with 1" collector arms and diffuser made from unplasticized PVC.
- Interior pipe with tubes of PN-16.
- 2½" sand discharge outlet.
- Fitted with pressure gauge, air purge and manual water drain.
- Connections to multiport valve with six positions: filter, backwash, rinse, recirculate, waste and closed.
- Innovation by AstralPool: the filter has a built-in safety valve to prevent pressure surges.
- Maximum pressure: 2.5 kg/cm$^2$.

Complies with Standard EN 16713-01

| | Code | Standard Pack | Standard weight in kg | Standard volume in m$^3$ |
|---|---|---|---|---|
| **Includes multiport valve** | | | | |
| Ø 500 mm outlet 1½" | 36596 | 1 | 20 | 0.29 |
| Ø 600 mm outlet 1½" | 36597 | 1 | 25 | 0.41 |
| Ø 750 mm outlet 2" | 36598 | 1 | 33 | 0.77 |
| **Multiport valve not included** | | | | |
| Ø 900 mm outlet 2½" | 36599 | 1 | 51 | 1.23 |

* Figures without valve

## TECHNICAL FEATURES

| Code | 36596 | 36597 | 36598 | 36599 |
|---|---|---|---|---|
| Ø Filter (mm) | 500 | 600 | 750 | 900 |
| Connections | 1½" | | 2" | 2½" |
| Filtering surface (m$^2$) | 0.19 | 0.30 | 0.44 | 0.64 |
| Filtering velocity (m$^3$/h/m$^2$) | 50 | | | |
| Flow rate (m$^3$/h) | 9.5 | 15 | 22 | 30 |
| Maximum pressure (kg/cm$^2$) | 2.5 | | | |
| Sand load (kg) | 120 | 190 | 360 | 580 |
| Grade 1 glass load (57011) (kg) | 100 | 150 | 225 | 375 |
| Grade 3 glass load (57013) (kg) | 0 | 0 | 50 | 100 |
| Net weight (kg) | 20 | 25 | 33 | 51 |

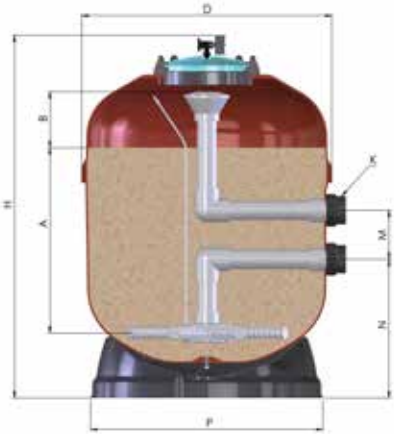

Sand drain of 2 ½" and water drain of ¾" with security valve.

# Europe Pro - Pro Long filters

64990

64986

64998

64994

## DESCRIPTION

Filters manufactured in fibreglass and polyester resin Complies with filtration requirements as per standard EN 16713-1. Sand and glass compatible (see page 215).

- Filter colour (Ral5015)
- ¼" purge valve.
- 2 ½" sand discharge
- Polyester or methacrylate cover with screws.
- Diameter of top access: 285 mm.
- Maximum pressure: 2.5 bar.

| | Code | Standard Pack | Standard weight in kg | Standard volume in m³ |
|---|---|---|---|---|
| **Pro version** | | | | |
| **With methacrylate cover** | | | | |
| 9500 l/h Ø 500 mm output 1½" | 64990 | 1 | 15 | 0.33 |
| 15000 l/h Ø 600 mm output 2" | 64991 | 1 | 20 | 0.45 |
| 22000 l/h Ø 750 mm output 2" | 64992 | 1 | 25 | 0.83 |
| 30000 l/h Ø 900 mm output 2½" | 64993 | 1 | 46 | 1.43 |
| **With polyester cover** | | | | |
| 9500 l/h Ø 500 mm output 1½" | 64986 | 1 | 15 | 0.33 |
| 15000 l/h Ø 600 mm output 2" | 64987 | 1 | 20 | 0.45 |
| 22000 l/h Ø 750 mm output 2" | 64988 | 1 | 25 | 0.83 |
| 30000 l/h Ø 900 mm output 2½" | 64989 | 1 | 46 | 1.43 |
| **Pro Long version** | | | | |
| **With methacrylate cover** | | | | |
| 9500 l/h Ø 500 mm output 1½" | 64998 | 1 | 23 | 0.33 |
| 15000 l/h Ø 600 mm output 2" | 64999 | 1 | 26 | 0.45 |
| 22000 l/h Ø 750 mm output 2" | 65000 | 1 | 34 | 0.83 |
| 30000 l/h Ø 900 mm output 2½" | 65002 | 1 | 65 | 1.43 |
| **With polyester cover** | | | | |
| 9500 l/h Ø 500 mm output 1½" | 64994 | 1 | 23 | 0.33 |
| 15000 l/h Ø 600 mm output 2" | 64995 | 1 | 26 | 0.45 |
| 22000 l/h Ø 750 mm output 2" | 64996 | 1 | 34 | 0.83 |
| 30000 l/h Ø 900 mm output 2½" | 64997 | 1 | 65 | 1.43 |

* Figures without valve

## TECHNICAL FEATURES

| | Pro version | | | | Pro Long version | | | |
|---|---|---|---|---|---|---|---|---|
| **With methacrylate cover** | **64990** | **64991** | **64992** | **64993** | **64998** | **64999** | **65000** | **65002** |
| **With polyester cover** | **64986** | **64987** | **64988** | **64989** | **64994** | **64995** | **64996** | **64997** |
| Ø D (mm) | 500 | 600 | 750 | 900 | 500 | 600 | 750 | 900 |
| Connection | 1½" | 2" | 2" | 2½" | 1½" | 2" | 2" | 2½" |
| Selector valve code | 00599 | 28476 | 28512 | 24837 | 00599 | 28476 | 28512 | 24837 |
| Filtration surface area (m²) | 0.19 | 0.3 | 0.44 | 0.64 | 0.19 | 0.3 | 0.44 | 0.64 |
| Filtration velocity (m³/h/m²) | 50 | | | | 50 | | | |
| Flow (m³/h) at 50 m³/h/m² | 9.5 | 15 | 22 | 30 | 9.5 | 15 | 22 | 30 |
| Maximum pressure (kg/cm²) | 2.5 | | | | 2.5 | | | |
| Sand load (kg) | 120 | 190 | 360 | 580 | 155 | 240 | 430 | 615 |
| Grade 1 glass load (57011) (kg) | 100 | 150 | 250 | 375 | 100 | 150 | 275 | 400 |
| Grade 3 glass load (57013) (kg) | 0 | 0 | 50 | 100 | 25 | 50 | 75 | 100 |
| Net weight (kg) | 15 | 20 | 25 | 46 | 20 | 25 | 33 | 51 |
| Depth of filter bed (mm) | 390 | 445 | 530 | 645 | 520 | 565 | 620 | 680 |

Complies with Standard EN 16713-01

LAMINATED SAND FILTERS

# RapidPool filter

Complies with Standard EN 16713-01

**Filtration bed 0.6 m**

## DESCRIPTION

Laminated in reinforced polyester with fibreglass. Red, polypropylene base, screw-free lid, cap for sand and water discharge, pressure gauge and air purge incorporated in the lid and side selector valve. Maximum filtration speed 50/h/m². Maximum pressure: 2.5 bar. Sand and glass compatible (see page 215).

| | Code | Standard Pack | Standard weight in kg | Standard volume in m³ |
|---|---|---|---|---|
| **Top mounted valve version** | | | | |
| 6000 l/h Ø 400 mm outlet 1½" | 32427 | 1 | 19 | 0.200 |
| 9000 l/h Ø 500 mm outlet 1½" | 32428 | 1 | 25 | 0.355 |
| 15000 l/h Ø 650 mm outlet 1½" | 32429 | 1 | 34 | 0.600 |
| 24000 l/h Ø 800 mm outlet 2" | 33849 | 1 | 45 | 1.050 |
| **Side mounted valve version** | | | | |
| 6000 l/h Ø 400 mm outlet 1½" | 00488 | 1 | 19 | 0.150 |
| 9000 l/h Ø 500 mm outlet 1½" | 00489 | 1 | 25 | 0.280 |
| 15000 l/h Ø 650 mm outlet 1½" | 00490 | 1 | 34 | 0.500 |
| 24000 l/h Ø 800 mm outlet 2" | 00491 | 1 | 45 | 0.880 |

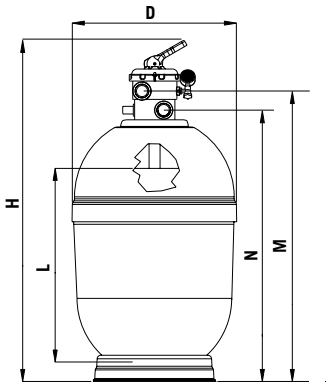


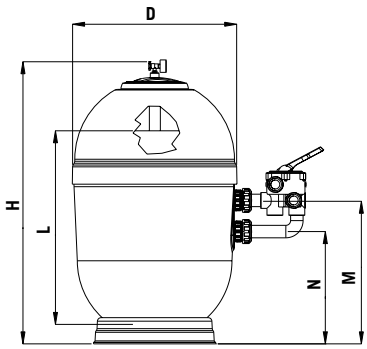


## TECHNICAL FEATURES

| | With Top mounted multiport valve | | | | With multiport valve | | | |
|---|---|---|---|---|---|---|---|---|
| | 32427 | 32428 | 32429 | 33849 | 00488 | 00489 | 00490 | 00491 |
| Ø Filter (mm) | 400 | 500 | 650 | 800 | 400 | 500 | 650 | 800 |
| H (mm) | 1020 | 1165 | 1285 | 1566 | 860 | 1032 | 1126 | 1272 |
| M (mm) | 850 | 995 | 1115 | 1355 | 442 | 527 | 552 | 592 |
| N (mm) | 790 | 935 | 1055 | 1279 | 317 | 402 | 427 | 362 |
| Connections | 1½" | 1½" | 1½" | 2" | 1½" | 1½" | 1½" | 2" |
| Flow (m³/h) at 50 m³/h/m² | 6 | 9 | 15 | 24 | 6 | 9 | 15 | 24 |
| Pool volume (m³) (8 h) | 48 | 72 | 120 | 120 | 48 | 72 | 120 | 192 |
| Sand load (kg) | 60 | 130 | 255 | 445 | 60 | 130 | 255 | 445 |
| Grade 1 glass load (57011) (kg) | 50 | 100 | 175 | 275 | 50 | 100 | 175 | 275 |
| Grade 3 glass load (57013) (kg) | 0 | 0 | 25 | 75 | 0 | 0 | 25 | 75 |
| Sand height (mm) | 545 | 571 | 650 | 785 | 545 | 571 | 650 | 785 |
| Maximum pressure (kg/cm²) | 2.5 | 2.5 | 2.5 | 2.5 | 2.5 | 2.5 | 2.5 | 2.5 |
| Net weight (kg) | 19 | 25 | 34 | 44 | 15 | 22 | 30 | 45 |
| Package volume (m³) | 0.20 | 0.355 | 0.60 | 1.05 | 0.16 | 0.3 | 0.53 | 0.9 |

LAMINATED SAND FILTERS

# Aster filter

## DESCRIPTION

Filter laminated in polyester and fibreglass. Grey, polypropylene base, screw-free lid, cap for sand and water discharge, pressure gauge and side selector valve. Maximum pressure 2.5 bar. Maximum filtration speed 50/h/m². Complies with filtration requirements as per standard EN 16713-1. Sand and glass compatible (see page 215).

| | Code | Standard Pack | Standard weight in kg | Standard volume in m³ |
|---|---|---|---|---|
| **With top mounted multiport valve** | | | | |
| 5000 l/h Ø 350 mm outlet 1½" | 30768 | 1 | 17 | 0.13 |
| 8000 l/h Ø 450 mm outlet 1½" | 30769 | 1 | 20 | 0.23 |
| 9000 l/h Ø 500 mm outlet 1½" | 30770 | 1 | 22 | 0.28 |
| 14000 l/h Ø 600 mm outlet 1½" | 30771 | 1 | 27 | 0.39 |
| 15000 l/h Ø 650 mm outlet 1½" | 30772 | 1 | 28 | 0.45 |
| 21000 l/h Ø 750 mm outlet 2" | 33847 | 1 | 35 | 0.62 |
| 32000 l/h Ø 900 mm outlet 2" | 33848 | 1 | 53 | 1.27 |
| **With side mounted multiport valve** | | | | |
| 5000 l/h Ø 350 mm outlet 1½" | 00497 | 1 | 18 | 0.13 |
| 8000 l/h Ø 450 mm outlet 1½" | 00498 | 1 | 21 | 0.23 |
| 9000 l/h Ø 500 mm outlet 1½" | 19781 | 1 | 23 | 0.28 |
| 12000 l/h Ø 550 mm outlet 1½" | 32706 | 1 | 27 | 0.28 |
| 14000 l/h Ø 600 mm outlet 1½" | 00499 | 1 | 28 | 0.39 |
| 15000 l/h Ø 650 mm outlet 1½" | 21071 | 1 | 29 | 0.45 |
| 18000 l/h Ø 680 mm outlet 1½" | 28479 | 1 | 30 | 0.46 |
| 21000 l/h Ø 750 mm outlet 2" | 00500 | 1 | 37 | 0.62 |
| 32000 l/h Ø 900 mm outlet 2" | 08133 | 1 | 55 | 1.27 |
| **Without multiport valve** | | | | |
| 31000 l/h Ø 900 mm outlet 2½" | 00501 | 1 | 53 | 1.27 |

UNE-EN 16713-01

Complies with Standard EN 16713-01

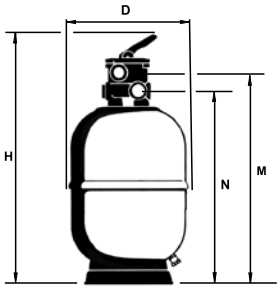


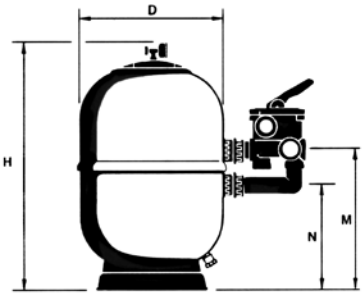


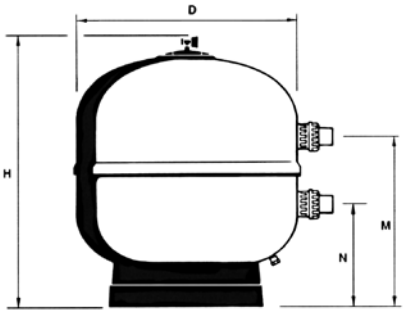


## TECHNICAL FEATURES

| | With Top mounted multiport valve | | | | | | | With multiport valve | | | | | | | | | Without valve |
|---|---|---|---|---|---|---|---|---|---|---|---|---|---|---|---|---|---|
| | 30768 | 30769 | 30770 | 30771 | 30772 | 33847 | 33848 | 00497 | 00498 | 19781 | 32706 | 00499 | 21071 | 28479 | 00500 | 08133 | 00501 |
| Ø D (mm) | 350 | 450 | 500 | 600 | 650 | 750 | 900 | 350 | 450 | 500 | 550 | 600 | 650 | 680 | 750 | 900 | 900 |
| H (mm) | 910 | 965 | 960 | 1005 | 1060 | 1184 | 1344 | 780 | 795 | 770 | 825 | 850 | 880 | 915 | 945 | 1050 | 1050 |
| M (mm) | 740 | 795 | 790 | 835 | 890 | 973 | 1133 | 420 | 430 | 415 | 455 | 455 | 480 | 525 | 555 | 635 | 660 |
| N (mm) | 680 | 785 | 730 | 775 | 830 | 897 | 1057 | 295 | 305 | 290 | 330 | 330 | 355 | 400 | 325 | 365 | 390 |
| Connections | 1½" | 1½" | 1½" | 1½" | 1½" | 2" | 2" | 1½" | 1½" | 1½" | 1½" | 1½" | 1½" | 1½" | 2" | 2" | 2½" |
| Flow (m³/h) at 50 m³/h/m² | 5 | 8 | 9 | 14 | 15 | 21 | 31 | 5 | 8 | 9 | 12 | 14 | 15 | 18 | 21 | 30 | 30 |
| Pool volume (m³) (8 h) | 40 | 64 | 72 | 112 | 120 | 168 | 240 | 40 | 64 | 72 | 96 | 112 | 120 | 144 | 168 | 240 | 240 |
| Sand load (kg) | 50 | 70 | 90 | 110 | 200 | 290 | 500 | 50 | 70 | 90 | 110 | 125 | 200 | 210 | 290 | 500 | 500 |
| Grade 1 glass load (57011) (kg) | 50 | 50 | 75 | 100 | 150 | 175 | 325 | 50 | 50 | 75 | 100 | 100 | 150 | 150 | 175 | 325 | 325 |
| Grade 3 glass load (57013) (kg) | 0 | 0 | 0 | 0 | 0 | 50 | 75 | 0 | 0 | 0 | 0 | 0 | 0 | 25 | 50 | 75 | 75 |
| Maximum pressure (kg/cm²) | 2.5 | 2.5 | 2.5 | 2.5 | 2.5 | 2.5 | 2.5 | 2.5 | 2.5 | 2.5 | 2.5 | 2.5 | 2.5 | 2.5 | 2.5 | 2.5 | 2.5 |
| Net weight (kg) | 17 | 20 | 22 | 27 | 28 | 35 | 53 | 18 | 21 | 23 | 27 | 28 | 29 | 30 | 37 | 55 | 53 |
| Package volume (m³) | 0.13 | 0.23 | 0.28 | 0.39 | 0.45 | 0.62 | 1.27 | 0.13 | 0.23 | 0.28 | 0.28 | 0.39 | 0.45 | 0.46 | 0.62 | 1.26 | 1.27 |

LAMINATED SAND FILTERS

# Vesubio filter

## DESCRIPTION

The Vesubio range has been expanded to reach both the public and private pool sectors. Filters manufactured using simultaneous projection of resin and fibreglass. Threaded lid with high-resistance screws. Ø 210mm top mouth. Ø 1050mm and Ø 1200mm models also available with a top mouth of Ø 400mm. Maximum pressure 2.5 bar. Sand and glass compatible (see page 215).

| | Code | Standard Pack | Standard weight in kg | Standard volume in m³ |
|---|---|---|---|---|
| **Side mount version** | | | | |
| 8000 l/h Ø 450 mm outlet 50 mm | 15785 | 1 | 16 | 0.200 |
| 9000 l/h Ø 500 mm outlet 50 mm | 19353 | 1 | 20 | 0.260 |
| 14000 l/h Ø 600 mm outlet 50 mm | 15786 | 1 | 23 | 0.357 |
| 22000 l/h Ø 750 mm outlet 63 mm | 15787 | 1 | 32 | 0.595 |
| 32000 l/h Ø 900 mm outlet 75 mm | 15788 | 1 | 48 | 1.003 |
| 43000 l/h Ø 1050* mm outlet 75 mm | 15789 | 1 | 97 | 2.052 |
| 43000 l/h Ø 1050** mm outlet 75 mm | 32391 | 1 | 97 | 2.052 |
| 56000 l/h Ø 1200* mm outlet 90 mm | 15790 | 1 | 130 | 2.450 |
| 56000 l/h Ø 1200** mm outlet 90 mm | 32392 | 1 | 140 | 2.430 |
| **Top mount version** | | | | |
| 8000 l/h Ø 450 mm outlet 50 mm | 32430 | 1 | 19 | 0.280 |
| 9000 l/h Ø 500 mm outlet 50 mm | 32431 | 1 | 23 | 0.350 |
| 14000 l/h Ø 600 mm outlet 50 mm | 32432 | 1 | 26 | 0.480 |
| 22000 l/h Ø 750 mm outlet 63 mm | 33850 | 1 | 40 | 0.787 |
| 32000 l/h Ø 900 mm outlet 63 mm | 33851 | 1 | 56 | 1.276 |

* Small upper lid of Ø 210 mm

** Upper lid of Ø 400 mm

UNE-EN 167-13-01

Complies with Standard EN 16713-01

**Filters with a side connection up to Ø 1050 mm can use a multiport selector valve (see page 215).**

**Ø 900 and Ø 1050 mm filters with side outlets are supplied without multiport valve.**

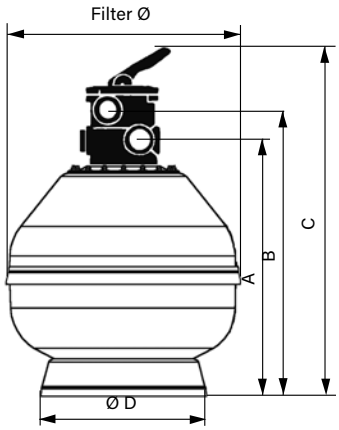


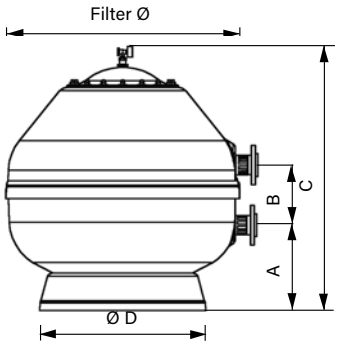


## TECHNICAL FEATURES

| | With Top mounted multiport valve | | | | | With multiport valve | | | | | | | | |
|---|---|---|---|---|---|---|---|---|---|---|---|---|---|---|
| | 32430 | 32431 | 32432 | 33850 | 33851 | 15785 | 19353 | 15786 | 15787 | 15788 | 15789 | 32391 | 15790 | 32392 |
| Ø Filter (mm) | 450 | 500 | 600 | 750 | 900 | 450 | 500 | 600 | 750 | 900 | 1050 | 1050 | 1200 | 1200 |
| A (mm) | 650 | 690 | 790 | 837 | 987 | 265 | 305 | 325 | 300 | 325 | 435 | 410 | 490 | 490 |
| B (mm) | 710 | 750 | 850 | 913 | 1063 | 125 | 125 | 125 | 230 | 270 | 270 | 270 | 270 | 270 |
| C (mm) | 880 | 920 | 1020 | 1124 | 1274 | 725 | 765 | 865 | 895 | 1080 | 1110 | 1235 | 1235 | 1360 |
| D (mm) | 347 | 400 | 400 | 490 | 625 | 347 | 400 | 400 | 490 | 625 | 760 | 775 | 855 | 940 |
| Filtration surface area (m²) | 0.16 | 0.19 | 0.30 | 0.44 | 0.64 | 0.16 | 0.19 | 0.30 | 0.44 | 0.64 | 0.86 | 0.86 | 1.13 | 1.13 |
| Connections | 1½" | 1½" | 1½" | 2" | 2" | 1½" | 1½" | 1½" | 2" | 2½" | 2½" | 2½" | 90 | 90 |
| Flow (m³/h) at 50 m³/h/m² | 8 | 9 | 14 | 22 | 32 | 8 | 9 | 14 | 22 | 32 | 43 | 43 | 56 | 56 |
| Pool volume (m³) (8 hours) | 64 | 72 | 112 | 176 | 256 | 64 | 72 | 112 | 176 | 256 | 344 | 344 | 448 | 448 |
| Sand load (kg) | 60 | 95 | 148 | 245 | 415 | 60 | 95 | 148 | 245 | 415 | 660 | 660 | 1000 | 1000 |
| Grade 1 glass load (57011) (kg) | 50 | 75 | 125 | 150 | 275 | 50 | 75 | 125 | 150 | 275 | 500 | 500 | 775 | 775 |
| Grade 3 glass load (57013) (kg) | 0 | 0 | 0 | 50 | 50 | 0 | 0 | 0 | 50 | 50 | 125 | 125 | 200 | 200 |

# Millennium

- Blow-moulded in a single seamless piece of plastic.
- Fitted with a pressure gauge and integrated air purge and manual water drain.
- Selector valve included.
- Maximum working pressure: 2.5 kg/cm² for filter Ø 380 mm, Ø 430 mm and Ø 480 mm, and 2 kg/cm² for filter Ø 560 mm and Ø 660 mm.
- Sand- and glass-compatible (see page 215).
- Complies with filtration requirements as per standard EN 16713-1.

Complies with Standard EN 16713-01

**Optional: Standard American sizes**

Complies with Standard EN 16713-01

## Millennium filters with Top mounted valve

| | Code | Standard Pack | Standard weight in kg | Standard volume in m³ |
|---|---|---|---|---|
| Ø 380 mm - 5500 l/h outlet 1½" | 33814 | 1 | 12.0 | 0.17 |
| Ø 430 mm - 7000 l/h outlet 1½" | 33815 | 1 | 14.0 | 0.17 |
| Ø 480 mm - 9000 l/h outlet 1½" | 33816 | 1 | 16.0 | 0.24 |
| Ø 560 mm - 12000 l/h outlet 1½" | 33817 | 1 | 17.0 | 0.35 |
| Ø 660 mm - 17000 l/h outlet 1½" | 33818 | 1 | 24.5 | 0.52 |

## Millennium filters with side mounted valve

| | Code | Standard Pack | Standard weight in kg | Standard volume in m³ |
|---|---|---|---|---|
| Ø 380 mm - 5500 l/h outlet 1½" | 35321 | 1 | 10.5 | 0.13 |
| Ø 430 mm - 7000 l/h outlet 1½" | 22497 | 1 | 13.0 | 0.13 |
| Ø 480 mm - 9000 l/h outlet 1½" | 22499 | 1 | 16.0 | 0.18 |
| Ø 560 mm - 12000 l/h outlet 1½" | 22501 | 1 | 18.0 | 0.26 |
| Ø 660 mm - 17000 l/h outlet 1½" | 28254 | 1 | 29.0 | 0.42 |

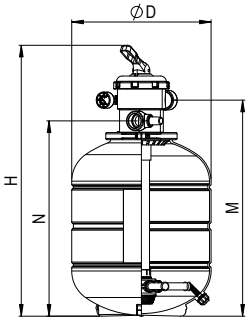


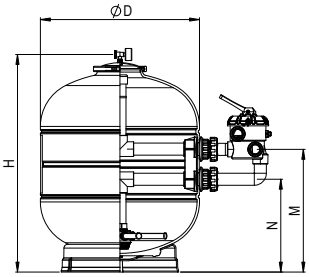


## TECHNICAL FEATURES

| | A - Top mounted filter | | | | | B - Side mounted filter | | | | |
|---|---|---|---|---|---|---|---|---|---|---|
| | 33814 | 33815 | 33816 | 33817 | 33818 | 35321 | 22497 | 22499 | 22501 | 28254 |
| Ø D (mm) | 380 | 430 | 480 | 560 | 660 | 380 | 430 | 480 | 560 | 660 |
| H (mm) | 820 | 835 | 870 | 945 | 1050 | 615 | 655 | 682 | 770 | 900 |
| M (mm) | 650 | 665 | 700 | 775 | 880 | 225 | 265 | 292 | 380 | 510 |
| N (mm) | 585 | 600 | 635 | 710 | 815 | 100 | 140 | 167 | 255 | 385 |
| Length L (mm) | - | - | - | - | - | - | - | - | - | - |
| Connections | 1½" | 1½" | 1½" | 1½" | 1½" | 1½" | 1½" | 1½" | 1½" | 1½" |
| Flow rate (m³/h) | 5.5 | 7 | 9 | 12 | 17 | 5.5 | 7 | 9 | 12 | 17 |
| Pool volume approx. (m³) | up to 40 | 40-50 | 50-75 | 75-100 | 140 | up to 40 | 40-50 | 50-75 | 75-100 | 140 |
| Sand load (kg) | ± 40 | ± 60 | ± 80 | ± 110 | ± 180 | ± 40 | ± 60 | ± 80 | ± 110 | ± 180 |
| Grade 1 glass load (57011) (kg) | ± 35 | ± 50 | ± 70 | ± 90 | ± 150 | ± 35 | ± 50 | ± 70 | ± 90 | ± 150 |
| Grade 3 glass load (57013) (Kg) | 0 | 0 | 0 | 0 | 25 | 0 | 0 | 0 | 0 | 25 |
| Maximum pressure (kg/cm²) | 2.5 | 2.5 | 2.5 | 2 | 2 | 2.5 | 2.5 | 2.5 | 2 | 2 |
| Net weight (kg) | 12 | 13.5 | 15 | 16.5 | 24 | 10 | 12 | 15 | 17.5 | 28 |
| Package volume (m³) | 0.17 | 0.17 | 0.24 | 0.35 | 0.52 | 0.13 | 0.13 | 0.18 | 0.26 | 0.42 |

# Berlin

- Filters made of fiberglass and polyester resin with Internal components and accessories in high quality engineering plastics.
- Thanks to its double coating, the resulting body is extremely resistant, durable and reliable.
- Compatible with sand and glass, among others (see page 215).
- They comply with filtration requirements as per standard EN 16713-1.

Complies with Standard EN 16713-01

## Berlin filter

### DESCRIPTION

Ø 230mm screw-down lid, injection-moulded. Fitted with manual air and water bleed valves, a pressure gauge and a side mounted multiport valve. Maximum filtration speed ($m^3/h/m^2$) Complies with filtration requirements as per standard EN 16713-1. Sand and glass compatible (see page 215).

| | Code | Standard Pack | Standard weight in kg | Standard volume in $m^3$ |
|---|---|---|---|---|
| **With multiport valve:** | | | | |
| 9000 l/h Ø 500 mm outlet 1½" | 00541 | 1 | 17.3 | 0.24 |
| 14000 l/h Ø 600 mm outlet 1½" | 00542 | 1 | 21.8 | 0.37 |
| 21000 l/h Ø 750 mm outlet 2" | 00543 | 1 | 35.1 | 0.65 |
| **Without multiport valve:** | | | | |
| 30000 l/h Ø 900 mm outlet 2½" | 00544 | 1 | 53.4 | 1.01 |
| 30000 l/h Ø 900 mm outlet 2" | 15397 | 1 | 53.4 | 1.01 |
| 30000 l/h Ø 900 mm outlet 2" (4 bar) | 28474 | 1 | 67.0 | 1.01 |
| **Without multiport valve and with Ø 400 mm polyester and FV lid:** | | | | |
| 43000 l/h Ø 1050 mm outlet Ø 75 mm | 00545 | 1 | 110.0 | 1.92 |
| 56000 l/h Ø 1200 mm outlet Ø 90 mm | 00546 | 1 | 140.0 | 2.70 |

* Figures without valve

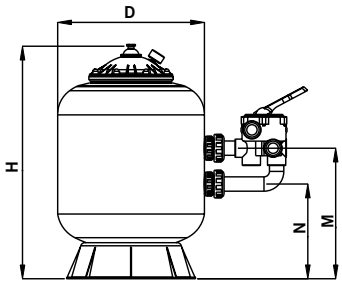


With multiport valve

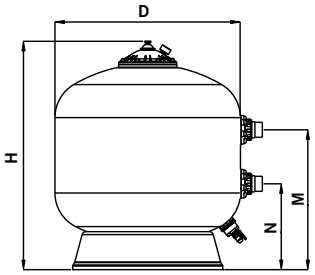


Without multiport valve

### TECHNICAL FEATURES

| | With multiport valve | | | Without multiport valve | | | | |
|---|---|---|---|---|---|---|---|---|
| | 00541 | 00542 | 00543 | 00544 | 15397 | 28474 | 00545 | 00546 |
| Ø D (mm) | 500 | 600 | 750 | 900 | 900 | 900 | 1050 | 1200 |
| H (mm) | 805 | 910 | 1050 | 1145 | 1135 | 1135 | 1300 | 1450 |
| M (mm) | 450 | 505 | 610 | 685 | 635 | 635 | 810 | 870 |
| N (mm) | 325 | 380 | 380 | 415 | 405 | 405 | 500 | 560 |
| Connections | 1½" | 1½" | 2" | 2½" | 2" | 2" | *D75 | **D90 |
| Flow ($m^3/h$) at 50 $m^3/h/m^2$ | 9 | 14 | 21 | 30 | 30 | 30 | 43 | 56 |
| Pool volume ($m^3$) | 50-75 | 75-115 | 115-170 | 170-240 | - | - | 240-350 | 350-450 |
| Sand load (kg) | 100 | 175 | 300 | 525 | 525 | 525 | 575 | 800 |
| Gravel load (kg) | - | - | - | - | - | - | 300 | 300 |
| Grade 1 glass load (57011) (kg) | 75 | 150 | 200 | 350 | 350 | 350 | 600 | 825 |
| Grade 3 glass load (57013) (kg) | 0 | 0 | 50 | 75 | 75 | 75 | 175 | 200 |
| Maximum pressure ($kg/cm^2$) | 2.5 | 2.5 | 2.5 | 2.5 | 2.5 | 4 | 2.5 | 2.5 |
| Net weight (kg) | 15.3 | 19.8 | 33.1 | 51.4 | 51.4 | 51.4 | 100 | 130 |
| Package volume ($m^3$) | 0.35 | 0.37 | 0.65 | 1.01 | 1.01 | 1.01 | 1.92 | 2.70 |

HIGH PERFORMANCE LAMINATED SAND FILTERS

# Delta 1000 filter

## DESCRIPTION

Filter laminated in polyester and fibreglass available in diameters of 650, 800, 1000 and 1200 mm. It has a 1-m filter bed and is available with an arm collector system and a plate collector system. Complies with filtration requirements as per standard EN 16713-1.

- DN 200 filter lid with quick-locking system for 650 and 800 models and DN 400 bolt down lid for 1000 and 1200 models.
- DN200 lateral manhole with bolt down cover.
- Filter interior left with natural resin finish.
- Optional methacrylate sight glass on the Delta 10 model. More than one sight glass can be placed if desired.
- Inner pipe and fittings in PVC, PP and ABS.
- Pressure gauge included in filter lid.
- Gaskets in EPDM and all screw fittings in stainless steel.
- Vinylester option. In this case, internal layer is manufactured from vinylester resin (and not only the top layer in contact with the water), to a maximum chemical resistance of 0.4 ppm of ozone dissolved and to maximum temperature 50°.
- Comes in RAL 5024 blue.

Complies with Standard EN 16713-01

**Filtration bed 1 m**

| | | | Code | Standard Pack | Standard weight in kg | Standard volume in m³ |
|---|---|---|---|---|---|---|
| **Maximum pressure: 2.5 kg/cm² Conventional collector arms. Arm slots 0.3 mm** | | | | | | |
| Diameter Ø mm | Outlet Ø mm | Flow rate m³/h at 40 m³/h/m | | | | |
| 500 | 1½" | 8 | 58682 | 1 | 80 | 1.34 |
| 650 | 1½" | 13.3 | 36676 | 1 | 80 | 1.34 |
| 800 | 2" | 20.1 | 36677 | 1 | 90 | 1.71 |
| 1000 | 2½" | 31.4 | 36678 | 1 | 125 | 2.16 |
| 1200 | 90 | 45.2 | 36679 | 1 | 150 | 3.29 |
| **Maximum pressure: 2.5 kg/cm² Nozzle collector plate. Nozzle slots slots 0.5 mm** | | | | | | |
| Diameter Ø mm | Outlet Ø mm | Flow rate m³/h at 40 m³/h/m | | | | |
| 650 | 1½" | 13.3 | 36684-0100 100 000 | 1 | 94 | 1.34 |
| 800 | 2" | 20.1 | 36685-0100 100 000 | 1 | 111 | 1.71 |
| 1000 | 2½" | 31.4 | 36686 100 000 | 1 | 155 | 2.16 |
| 1200 | 90 | 45.2 | 36687 100 000 | 1 | 190 | 3.29 |

* Maximum flow and filtration velocity recommended

## TECHNICAL FEATURES

| | Collector arms | | | | | Nozzle collector plate | | | |
|---|---|---|---|---|---|---|---|---|---|
| | 58682 | 36676 | 36677 | 36678 | 36679 | 36684 | 36685 | 36686 | 36687 |
| Sand load (kg) | 245 | 400 | 640 | 990 | 1425 | 400 | 640 | 990 | 1425 |
| Gravel load (kg) | 60 | 86 | 156 | 300 | 350 | 46 | 78 | 120 | 175 |
| Grade 1 glass load (57011) (kg) | 175 | 275 | 450 | 725 | 1000 | 250 | 400 | 600 | 875 |
| Grade 2 glass load (57012) (kg) | 50 | 75 | 150 | 225 | 325 | 75 | 125 | 200 | 275 |
| Grade 3 glass load (57013) (kg) | 75 | 100 | 150 | 250 | 350 | 100 | 125 | 200 | 300 |

HIGH PERFORMANCE LAMINATED SAND FILTERS

# Delta 1200 filter

Complies with Standard EN 16713-01

**Filtration bed 1.2 m**

## DESCRIPTION

Filter laminated in polyester and fibreglass available in diameters of 650, 800, 1000 and 1200 mm. It has a 1.2-m filter bed and is available with an arm collector system and a plate collector system. Complies with filtration requirements as per standard EN 16713-1.

- DN 200 filter lid with quick-locking system for 650 and 800 models and DN 400 bolt down lid for 1000 and 1200 models.
- DN200 lateral manhole with bolt down cover.
- Filter interior left with natural resin finish.
- EASTAR sightglass as standard. Further sight glasses are available on request.
- Inner pipe and fittings in PVC, PP and ABS.
- Pressure gauge included in filter lid.
- Gaskets in EPDM and all screw fittings in stainless steel.
- Vinylester option. In this case, internal layer is manufactured from vinylester resin (and not only the top layer in contact with the water), to a maximum chemical resistance of 0.4 ppm of ozone dissolved and to a maximum temperature 50°.
- Comes in RAL 5024 blue.

**Maximum pressure: 2.5 kg/cm²**
**Conventional collector arms.**
**Arm slots 0.3 mm**

| Diameter Ø mm | Outlet Ø mm | Flow rate m³/h at 40 m³/h/m | Code | Standard Pack | Standard weight in kg | Standard volume in m³ |
|---|---|---|---|---|---|---|
| 650 | 1½" | 13.3 | 36680-0100 001 000 | 1 | 100 | 1.50 |
| 800 | 2" | 20.1 | 36681-0100 001 000 | 1 | 110 | 1.94 |
| 1000 | 2½" | 31.4 | 36682 001 000 | 1 | 120 | 2.31 |
| 1200 | 90 | 45.2 | 36683 001 000 | 1 | 160 | 3.54 |

**Maximum pressure: 2.5 kg/cm²**
**Nozzle collector plate.**
**Nozzle slots 0.5 mm**

| Diameter Ø mm | Outlet Ø mm | Flow rate m³/h at 40 m³/h/m | Code | Standard Pack | Standard weight in kg | Standard volume in m³ |
|---|---|---|---|---|---|---|
| 650 | 1½" | 13.3 | 36688-0100 101 000 | 1 | 114 | 1.50 |
| 800 | 2" | 20.1 | 36689-0100 101 000 | 1 | 131 | 1.94 |
| 1000 | 2½" | 31.4 | 36690 101 000 | 1 | 150 | 2.31 |
| 1200 | 90 | 45.2 | 36691 101 000 | 1 | 200 | 3.54 |

* Maximum flow and filtration velocity recommended

## TECHNICAL FEATURES

| | Collector arms | | | | Nozzle collector plate | | | |
|---|---|---|---|---|---|---|---|---|
| | 36680 | 36681 | 36682 | 36683 | 36688 | 36689 | 36690 | 36691 |
| Sand load (kg) | 451 | 767 | 1325 | 1763 | 451 | 767 | 1325 | 1763 |
| Gravel load (kg) | 86 | 156 | 300 | 350 | 46 | 78 | 120 | 175 |
| Grade 1 glass load (57011) (kg) | 325 | 500 | 850 | 1125 | 300 | 450 | 750 | 1050 |
| Grade 2 glass load (57012) (kg) | 100 | 175 | 275 | 375 | 100 | 150 | 250 | 350 |
| Grade 3 glass load (57013) (kg) | 100 | 175 | 300 | 400 | 100 | 175 | 275 | 375 |

HIGH PERFORMANCE LAMINATED SAND FILTERS

# Artic Plus filter

## DESCRIPTION

Range of high-capacity retention filters with optimal backwash performance. Manufactured in polyester with an external gel-coat finish. Body of just two parts; ivory. Maximum working temperature of 50°C. Internal parts made from PVC plastic. Ø 400 lid to remove sand from bottom part of filter (optional) in Ø 1050 and Ø 1200 versions. Ø 650, 800, 950, 1050 and 1200 filters available with collector arms or nozzle plate. Compatible with sand and glass, among others (see page 215). Complies with filtration requirements as per standard EN 16713-1.

| | Code | Standard Pack | Standard weight in kg | Standard volume in m³ |
|---|---|---|---|---|
| **Collector arms system** | | | | |
| Ø 650 mm connection 1½" | 36053-0100 | 1 | 80 | 1.45 |
| Ø 800 mm connection 2" | 36054-0100 | 1 | 95 | 1.85 |
| Ø 950 mm connection 2½" | 41373 | 1 | 136 | 2.54 |
| Ø 1050 mm connection 3" | 36055 | 1 | 145 | 2.73 |
| Ø 1200 mm connection 4" | 36056 | 1 | 220 | 4.10 |

Complies with Standard EN 16713-01

**Filtration bed 1.2 m**

## TECHNICAL FEATURES

| | 36053 | 36054 | 41373 | 36055 | 36056 |
|---|---|---|---|---|---|
| Ø D (mm) | 680 | 825 | 970 | 1090 | 1255 |
| H (mm) | 1900 | 1950 | 1960 | 2145 | 2170 |
| M (mm) | 125 | 230 | 270 | 270 | 270 |
| N (mm) | 730 | 670 | 665 | 665 | 665 |
| L (mm) | 1200 | | | | |
| C (mm) | 300 | | | | |
| P (mm) | 490 | 625 | 705 | 775 | 940 |
| T (mm) | 200 | | | 400 | |
| Connections | 1½" | 2" | 2½" | 3" | 4" |
| Flow rate (m³/h) | 16.5 | 25 | 35 | 43 | 56.5 |
| Filtration area (m²) | 0.33 | 0.50 | 0.70 | 0.86 | 1.13 |
| Sand load (kg) | 470 | 660 | 1015 | 1240 | 1665 |
| Gravel load (kg) | 100 | 165 | 260 | 320 | 410 |
| Grade 1 glass load (57011) (kg) | 325 | 475 | 725 | 875 | 1175 |
| Grade 2 glass load (57012) (kg) | 100 | 150 | 225 | 275 | 375 |
| Grade 3 glass load (57013) (kg) | 125 | 150 | 250 | 300 | 400 |
| Maximum pressure (kg/cm²) | 2.5 | | | | |
| Net weight (kg) | 75 | 90 | 131 | 135 | 210 |
| Water drain | 1" | 1" | 1" | 2½" | 2½" |
| Injection-moulded plastic lid | Ø200 | Ø200 | Ø200 | Ø400 | Ø400 |

Nozzle plate detail

Collector arms detail

HIGH PERFORMANCE LAMINATED SAND FILTERS

# Artic filter

Complies with Standard EN 16713-01

**Filtration bed 1 m**

## DESCRIPTION

Range of high-capacity retention filters with optimal backwash performance. Manufactured in polyester with an external gel-coat finish. Body of just two parts; ivory. Maximum working temperature of 50°C. Internal parts made from PVC plastic. Ø 400 lid to remove sand from bottom part of filter (optional) in Ø 1050 and Ø 1200 versions. Ø 650, 800, 950, 1050 and 1200 filters available with collector arms or nozzle plate.
Compatible with sand and glass, among others (see page 215). Complies with filtration requirements as per standard EN 16713-1.

| | Code | Standard Pack | Standard weight in kg | Standard volume in m³ |
|---|---|---|---|---|
| **Collector arms system** | | | | |
| Ø 500 mm connection 1½" | 34029-0100 | 1 | 65 | 1.30 |
| Ø 650 mm connection 1½" | 34030-0100 | 1 | 70 | 1.34 |
| Ø 800 mm connection 2" | 34031-0100 | 1 | 75 | 1.67 |
| Ø 950 mm connection 2½" | 41187 | 1 | 119 | 2.30 |
| Ø 1050 mm connection 3" | 41188 | 1 | 145 | 2.42 |
| Ø 1200 mm connection 4" | 41189 | 1 | 165 | 3.65 |

## TECHNICAL FEATURES

| | 34029 | 34030 | 34031 | 41187 | 41188 | 41189 |
|---|---|---|---|---|---|---|
| Ø D (mm) | 535 | 680 | 825 | 970 | 1090 | 1255 |
| H (mm) | 1650 | 1700 | 1750 | 1760 | 1895 | 1970 |
| M (mm) | 125 | 125 | 230 | 270 | 270 | 270 |
| N (mm) | 780 | 775 | 685 | 655 | 630 | 665 |
| L (mm) | 1000 | | | | | |
| C (mm) | 300 | | | | | |
| P (mm) | 400 | 490 | 625 | 705 | 775 | 940 |
| T (mm) | 200 | | | | 400 | |
| Connections | 1½" | 1½" | 2" | 2½" | 3" | 4" |
| Flow rate (m³/h) | 9.5 | 16.5 | 25 | 35 | 43 | 56.5 |
| Filtration area (m²) | 0.19 | 0.33 | 0.50 | 0.70 | 0.86 | 1.13 |
| Sand load (kg) | 225 | 380 | 530 | 830 | 1015 | 1360 |
| Gravel load (kg) | 50 | 100 | 165 | 260 | 320 | 410 |
| Grade 1 glass load (57011) (kg) | 150 | 275 | 375 | 600 | 750 | 1000 |
| Grade 2 glass load (57012) (kg) | 50 | 75 | 125 | 200 | 250 | 325 |
| Grade 3 glass load (57013) (kg) | 50 | 100 | 150 | 225 | 275 | 350 |
| Maximum pressure (kg/cm²) | 2.5 | 2.5 | 2.5 | 2.5 | 2.5 | 2.5 |
| Net weight (kg) | 60 | 65 | 70 | 109 | 135 | 155 |
| Water drain | 1" | 1" | 1" | 1" | 2½" | 2½" |
| Injection-moulded plastic lid | Ø200 | Ø200 | Ø200 | Ø200 | Ø400 | Ø400 |

Nozzle plate detail

Collector arms detail

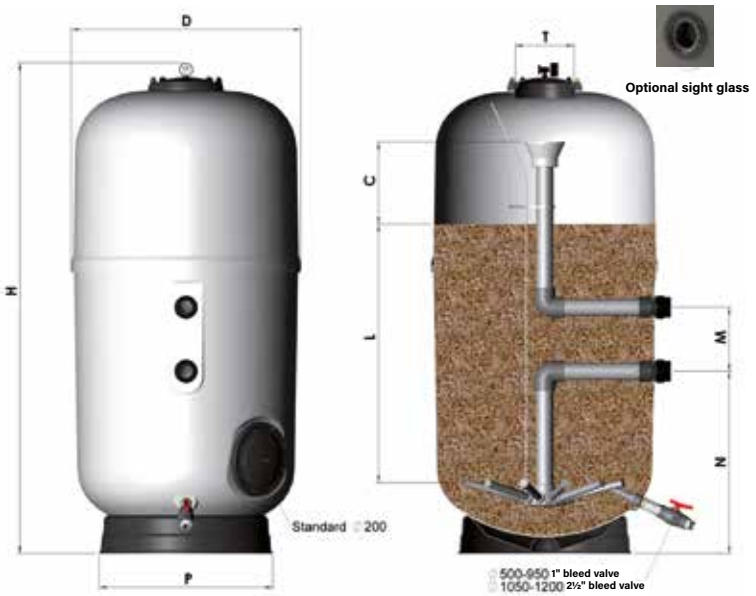

# Aster filter - high quality of filtration

Complies with Standard EN 16713-01

**Filtration bed 0.8 m**

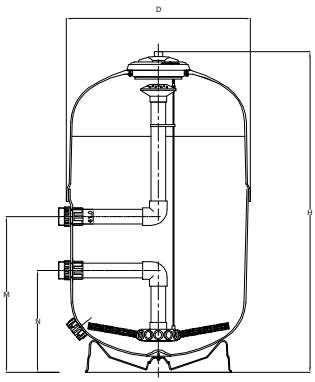


## DESCRIPTION

Laminated filter made of fibreglass and polyester. Filter bed 800 mm in depth. Grey in colour, polypropylene base, fast open lid, water drainage plug, flowmeter and side multiport valve. Maximum pressure 2.5 bar. Top filtration speed of 50 m³/h/m². The filter can be used with a single layer or a multi-layer combination of gravel with sand, glass or anthracite. Quick-release lid. Has a 2½" sand discharge out let at the bottom of the filter. Optional sand discharge outlet of 200 mm. Optional vinylester interior finish for treatment with ozone. Maximum temperature 50°.

| | Code | Standard Pack | Standard weight in kg | Standard volume in m³ |
|---|---|---|---|---|
| Ø 500 mm output 1½" | 24768-0100 | 1 | 30 | 0.44 |
| Ø 600 mm output 1½" | 24769-0100 | 1 | 40 | 0.64 |
| Ø 750 mm output 2" | 24770-0100 | 1 | 60 | 1.0 |
| Ø 900 mm output 2" | 10003-0100 | 1 | 90 | 1.6 |
| Ø 900 output 2½" | 10004 | 1 | 90 | 1.6 |

## TECHNICAL FEATURES

| | 24768-0100 | 24769-0100 | 24770-0100 | 10003-0100 | 10004 |
|---|---|---|---|---|---|
| Ø D (mm) | 500 | 600 | 750 | 900 | |
| H (mm) | 1365 | 1370 | 1435 | 1400 | 1435 |
| M (mm) | 605 | 605 | 665 | 825 | 865 |
| N (mm) | 480 | 480 | 435 | 595 | 595 |
| Connections | 1½" | 1½" | 2" | 2" | 2½" |
| Flow (m³/h) at 50 m³/h/m² | 9.5 | 16.5 | 21 | 31 | |
| Pool volume (m³) | 75 | 120 | 175 | 250 | |
| Sand load (kg) | 150 | 240 | 450 | 540 | |
| Gravel load (kg) | 15 | 35 | 65 | 135 | |
| Grade 1 glass load (57011) (kg) | 125 | 200 | 300 | 400 | |
| Grade 3 glass load (57013) (kg) | 25 | 25 | 50 | 75 | |
| Maximum pressure (kg/cm²) | 2.5 | | | | |

# Aster filter - high filtration with nozzle plate

Complies with Standard EN 16713-01

**Filtration bed 0.6 m**

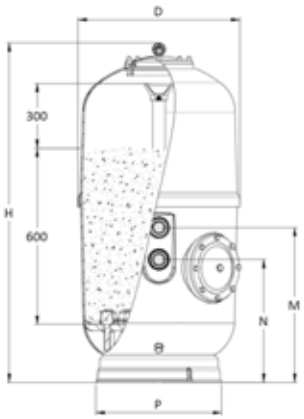


## DESCRIPTION

Filter laminated in polyester and fibreglass. Optional Ø 200mm sand discharge at bottom. Black screw-down lid ¼" water drain at bottom. Maximum pressure 2.5 bar. Maximum temperature 50°.

| | Code | Standard Pack | Standard weight in kg | Standard volume in m³ |
|---|---|---|---|---|
| Ø 500 mm output 2" | 24768FT01-110 000 | 1 | 30 | 0.46 |
| Ø 600 mm output 2" | 24769FT01-110 000 | 1 | 40 | 0.63 |
| Ø 750 mm output 2" | 24770FT01-110 000 | 1 | 60 | 0.99 |
| Ø 900 mm output 2" | 10003FT01-110 000 | 1 | 90 | 1.29 |
| Ø 900 output 2½" | 10004FT01-110 000 | 1 | 90 | 1.29 |

## TECHNICAL FEATURES

| | 24768FT01 110 000 | 24769FT01 110 000 | 24770FT01 110 000 | 10003FT01 110 000 | 10004FT01 110 000 |
|---|---|---|---|---|---|
| Ø D (mm) | 500 | 600 | 750 | 900 | |
| H (mm) | 1365 | 1370 | 1435 | 1400 | 1435 |
| M (mm) | 605 | 605 | 665 | 825 | 865 |
| N (mm) | 480 | 480 | 435 | 595 | |
| P (mm) | 400 | 490 | 625 | 705 | |
| Connections | 1½" | 1½" | 2" | 2" | 2½" |
| Flow (m³/h) at 50 m³/h/m² | 9.5 | 16.5 | 21 | 31 | |
| Pool volume (m³) | 75 | 120 | 175 | 250 | |
| Sand load (kg) | 200 | 300 | 450 | 580 | |
| Gravel load (kg) | 16 | 35 | 65 | 135 | |
| Grade 1 glass load (57011) (kg) | 125 | 200 | 300 | 400 | |
| Grade 3 glass load (57013) (kg) | 25 | 25 | 50 | 75 | |
| Maximum pressure (kg/cm²) | 2.5 | | | | |

# Norma

- **Laminated filters with higher filter bed for enhanced performance and filtration quality, both for single-layer and multi-layer filters.**
- **There are various options to help choose the model that best suits usage and maintenance requirements.**
- **Compatible with sand, glass and anthracite, among others (see page 215).**
- **They comply with filtration requirements as per standard EN 16713-1.**

Complies with Standard EN 16713-01

**Filtration bed 1.2 m**

## Norma filter

### DESCRIPTION

Filter laminated in fibreglass-reinforced polyester (FRP). For single layer or multilayer filling. Maximum pressure 2.5 bar. The Norma filter is designed according to Germany's DIN 19643/19605 standard. Available with a plate collector system (0.5 mm slot) including a manhole cover for inspection of the bottom. Fitted with a sight glass, Ø 200mm top lid for loading sand and Ø 200mm or Ø 400mm side mouth depending on model. Fitted with pressure gauge, air purge and manual water drain. Interiors in PVC and PP. A4 screws and EPDM gaskets. Standard colour: ivory. Options. Vinyl ester coating (ozone resistant, concentrations <0.4 ppm and max. temp 40°C). Sand and glass compatible (see page 215).

**Maximum pressure: 2.5 kg/cm²**
**Filtration velocity 30**

| Diameter Ø mm | Outlet Ø mm | Flow rate m³/h at 30 m³/h/m | Code | Standard Pack | Standard weight in kg | Standard volume in m³ |
|---|---|---|---|---|---|---|
| 650 | 90-75 | 10 | 08142P | 1 | 100 | 1.33 |
| 800 | 90-75 | 15 | 08143P | 1 | 125 | 2.00 |
| 1.000 | 140-110 | 23 | 08144P | 1 | 145 | 3.00 |
| 1.200 | 140-140 | 34 | 08145P | 1 | 177 | 5.50 |

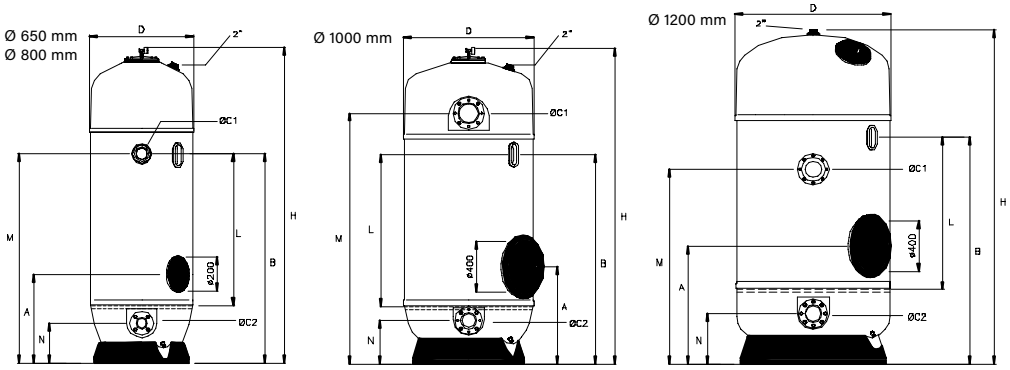


### TECHNICAL FEATURES

| | | 08142P | 08143P | 08144P | 08145P |
|---|---|---|---|---|---|
| D (mm) | | 650 | 800 | 1000 | 1200 |
| A (mm) | | 680 | 700 | 770 | 950 |
| B (mm) | | 1660 | 1640 | 1655 | 1790 |
| H (mm) | | 2480 | 2480 | 2490 | 2640 |
| L (mm) | | 1200 | 1200 | 1200 | 1200 |
| M (mm) | | 1650 | 1650 | 1980 | 1600 |
| N (mm) | | 320 | 320 | 340 | 400 |
| Ø C1 (mm) | | 90 | 90 | 140 | 140 |
| Ø C2 (mm) | | 75 | 75 | 110 | 140 |
| Flow (m³/h) at 30 m³/h/m² | | 10 | 15 | 23 | 33 |
| MULTILAYER | Anthracite 0.8 - 1.6 mm (l) | 148 | 250 | 390 | 564 |
| | Sand 0.4 - 0.8 mm (Kg) | 160 | 271 | 420 | 611 |
| | Gravel 1 - 2 mm (Kg) | 46 | 78 | 120 | 175 |
| | Gravel 3 - 5 mm (Kg) | 46 | 78 | 120 | 175 |
| SINGLE LAYER | Sand load (kg) | 451 | 767 | 1215 | 1763 |
| | Gravel load (kg) | 46 | 78 | 120 | 175 |
| | Grade 1 glass load (57011) (kg) | 275 | 500 | 750 | 1125 |
| | Grade 2 glass load (57012) (kg) | 100 | 150 | 250 | 350 |
| | Grade 3 glass load (57013) (kg) | 100 | 175 | 275 | 375 |

# OC-1 filtration media

## DESCRIPTION

**OC-1 filtration load: The future of pool filtration**

OC refers to Open Cell and OC-1 is a mechanical filter that uses open-cell filtration technology to filter water with a high quality, increasing the water saving and energy potential. The filtration media is an extruded plastic compound comprising a base of High Density Polyethylene with Calcium Carbonate.

- Saves water: exclusive filtration method that reduces water consumption by more than 40%.
- Saves power: lets you use a smaller pump or lower the power to get the same flow you would with traditional filtration media.
- Saves time: OC-1 reduces backwash frequency to less than a third of traditional methods, meaning more leisure time for you.
- The OC-1 media has been tested in accordance with current European standard EN16713-1.

Water Conservation

Energy Efficient

| | Code | Standard Pack | Standard weight in kg | Standard volume in m³ |
|---|---|---|---|---|
| OC-1 50L filtration media bag | 69752 | 1 | 9.0 | 0.05 |
| OC-1 20L filtration media bag | 69753 | 1 | 3.6 | 0.02 |

# Active Clear Glass

## DESCRIPTION

AstralPool sells Active Clear Glass filtration material.

Active Clear Glass has the following benefits:

- More efficient and ecological filtration with water and energy savings.
- Higher filtration capacity with a cleaner bed that traps bacteria.

Water Conservation

Recommended Commercial Pools

| | Code | Standard Pack | Standard weight in kg | Standard volume in m³ |
|---|---|---|---|---|
| **Granulomety** | | | | |
| 0.5 mm - 1.0 mm | 57011 | 1 | 25.0 | 0.667 |
| 1.0 mm - 3.0 mm | 57012 | 1 | 25.0 | 0.667 |
| 3.0 mm - 7.0 mm | 57013 | 1 | 25.0 | 0.667 |

## TECHNICAL FEATURES

| | | | % Volume of the filter bed | |
|---|---|---|---|---|
| | Code | Range | Filters D < 900 mm | Filters D > 900 mm |
| Range 1 | 57011 | 0.5 - 1.0 mm | 0.8 | 0.6 |
| Range 2 | 57012 | 1.0 - 3.0 mm | 0 | 0.2 |
| Range 3 | 57013 | 3,0 - 7,0 mm | 0.2 | 0.2 |

# Silex

## DESCRIPTION

Other silex grades available to order.

25 Kg bag.

Recommended Commercial Pools

| | Code | Standard Pack | Standard weight in kg | Standard volume in m³ |
|---|---|---|---|---|
| Granulometry 0.4 - 0.8 mm | 00596 | 1 | 25 | 0.667 |

# Gravel

## DESCRIPTION

Please ask for a quotation for other grades.

25 Kg bag.

| | Code | Standard Pack | Standard weight in kg | Standard volume in m³ |
|---|---|---|---|---|
| Granulometry 1 - 2 mm | 10697 | 1 | 25 | 0.667 |
| Granulometry 3 - 5 mm | 11346 | 1 | 25 | 0.667 |

# Anthracite

## DESCRIPTION

Please ask for a quotation for other grades.

25 Kg bag.

| | Code | Standard Pack | Standard weight in kg | Standard volume in m³ |
|---|---|---|---|---|
| Granulometry 0.8 - 1.6 mm | 03696 | 1 | 25 | 0.8 |

# Zeolite

## DESCRIPTION

Natural porous material that has higher filtration qualities than the normal substrate. It can be compared to that of diatoms, at a much more competitive price and longer duration.

| | Code | Standard Pack | Standard weight in kg | Standard volume in m³ |
|---|---|---|---|---|
| Zeolite standard 0.5 - 1 mm | 25845 | 1 | 25 | - |
| Zeolite standard 1-2 mm | 25846 | 1 | 30 | 0.023 |
| Zeolite standard 2-5 mm | 25847 | 1 | 30 | 0.023 |

# Diatomaceous earth

| | Code | Standard Pack | Standard weight in kg | Standard volume in m³ |
|---|---|---|---|---|
| Celatom FW-60. 20 Kgs bag | 03247 | 1 | 20 | 0.60 |
| Celite 545. 23 Kgs bag | 03246 | 1 | 23 | 0.60 |

# Nanofiber- replacement filtration media

| | | | | |
|---|---|---|---|---|
| For Nanofiber 150 | 65383 | 1 | 1.58 | 0.022 |
| For Nanofiber 180 | 65384 | 1 | 1.58 | 0.022 |
| For Nanofiber 200 | 65385 | 1 | 1.58 | 0.022 |

MULTIPORT VALVES

# Six positions multiport valve

## DESCRIPTION

A six positions multiport valve able to perform several functions in a hydraulic circuit: filtration, empty, closed, backwashing and rinsing of the filter. Its extremely functional design means that it can be fitted up to any installation. All joints will be perfectly sealed and it is easy to operate.

Its minimum friction and resistance, maximum safety were decisive factors to choose the best materials of its components: ABS body, lid and handle, PPO distributor, EPDM gaskets, metal parts in stainless steel.

## ASTRALPOOL FILTERS

| Connection options | Connection | Outlets | New Generation | | | Classic | | Classic Plus | | Flat | Magnum | |
|---|---|---|---|---|---|---|---|---|---|---|---|---|
| | | | | | | | | | | | | |
| | | | 1 ½" Eco | 1 ½" | 2" | 1 ½" | 2" | 1 ½" | 2" | 1 ½" | 2 ½" | 3" |
| Configuration 3 | With connection kit (elbow + straight coupling + o-rings) | Pipe con. BSP thread / TOP BSP thread / BOTTOM glued | | 20569 | 28512 | | | 73950 | 74862 | 34543 | 24837 | |
| | | Pipe con. NPT thread / TOP BSP thread / BOTTOM glued | | 22355 | 30788 | 06673-0700 | 09848 | | | | 24840 | |
| | Without connection kit | All connections BSP thread | | 23108 | 28511 | | | 76148 | 76149 | 34544 | 24838 | |
| | | Pipe con. BSP thread / TOP BSP thread / BOTTOM glued | | 20043 | | | | 75285 | | 34545 | | |
| | | All connections NPT thread | | 22356 | 30795 | | 07440 | 76511 | | | 24839 | |
| Top | Without connection acces-sories | All connections BSP thread | 32583 | 20565 | 33968 | 65216 | 22490 | | | 34546 | | |
| | | All connections NPT thread | | 22358 | | | 22492 | | | | | |

## OTHER FILTERS / CONFIGURATIONS

| | | | | | | | | | | | | |
|---|---|---|---|---|---|---|---|---|---|---|---|---|
| Configuration 1 | Without connection kit | All connections BSP thread | | | 28509 | 11542 | 08938 | | | | | |
| | | Pipe con. BSP thread TOP/BOTTOM glue | | | | 00597 | | | | | | |
| Configuration 2 | With connection kit | Pipe con. BSP thread / TOP glued / BOTTOM BSP thread | | | | 15385 | 15389 | | | | | |
| | Without connection kit | All connections BSP thread | | | 28510 | 11366 | 08939 | | | | | |
| Configuration 4 | Without connection kit | All connections BSP thread | | | 28513 | 11368 | 08940 | | | | | |
| Configuration 5 | Without connection kit | All connections BSP thread | | | 28514 | | | 76150 | 76151 | | | 28515 |
| | | All connections NPT thread | | | | | | | | | | 30798 |

** More configurations available*

# Classic Plus

- Manual multiport valves with six channels to carry out different functions in an hydraulic circuit.
- Connection to filter through a sweep elbow instead of a 90° elbow and new design to offer a reduced pressure loss.
- Diverter gasket placed in the diverter instead of the body to improve performance and maintenance.

Energy Efficient

## Classic Plus

### 1½" and 2" multiport valve with filter connections

| | Code | Standard Pack | Standard weight in kg | Standard volume in m³ |
|---|---|---|---|---|
| 1½" multiport valve - Configuration 3 | 73950 | 6 | 13 | 0.079 |
| 2" multiport valve - Configuration 3 | 74862 | 6 | 24 | 0.079 |

Energy Efficient

## Classic Plus

### 1½" and 2" multiport valve with filter connections - White

| | Code | Standard Pack | Standard weight in kg | Standard volume in m³ |
|---|---|---|---|---|
| 1½" multiport valve - Configuration 3 | 74999 | 6 | - | 0.079 |
| 2" multiport valve - Configuration 3 | 76146 | 6 | - | 0.079 |
| 1½" multiport valve - Configuration 3 PUMP, TOP, BOTTOM glue | 76147 | 6 | 13 | 0.079 |

Energy Efficient

## Classic Plus

### 1½" and 2" multiport valve without filter connections

| | Code | Standard Pack | Standard weight in kg | Standard volume in m³ |
|---|---|---|---|---|
| 1½" multiport valve - Configuration 3 | 76148 | 6 | - | 0.079 |
| 2" multiport valve - Configuration 3 | 76149 | 6 | - | 0.079 |
| 1½" multiport valve - Configuration 3 BOTTOM glue | 75285 | 6 | - | 0.079 |
| 1½" multiport valve - Configuration 5 | 76150 | 6 | 13 | 0.079 |
| 2" multiport valve - Configuration 5 | 76151 | 6 | 13 | 0.079 |
| 11/2" multiport valve - Configuration 3 NPT threads | 76511 | 6 | 13 | 0.079 |

### CORRESPONDENCE CHART (VALVES COMPLETELY COMPATIBLE IN THE INSTALLATION)

| CLASSIC PLUS CODE | CLASSIC CODE (discontinued) |
|---|---|
| 73950 | 00599 |
| 74862 | 07444 |
| 76148 | 14909 |
| 76149 | 07441 |
| 74999 | 06563 |
| 76146 | 11156 |
| 75285 | 00598 |
| 76147 | 61306 |
| 76511 | 06595 |

# Classic

- Manual multiport valves with six channels to carry out different functions in an hydraulic circuit.
- Its design, basically functional, offers a wide range of possibilities of connection to any installation, assuring perfect water-tightness and comfortable handling.

## Classic

### 1½" and 2" multiport valve with filter connections

| | Code | Standard Pack | Standard weight in kg | Standard volume in m³ |
|---|---|---|---|---|
| 1½" NPT multiport valve - Configuration 3 | 06673-0700 | 6 | 15.5 | 0.079 |
| 2" NPT multiport valve- Configuration 3 | 09848 | 6 | 22.7 | 0.150 |
| 2" multiport valve - Configuration 3 (special distance between con. 270mm - for filter 08133) | 21263 | 6 | 22.2 | 0.165 |

## Classic

### 1½" and 2" multiport valve

| | Code | Standard Pack | Standard weight in kg | Standard volume in m³ |
|---|---|---|---|---|
| 1½" multiport valve - Configuration 1 | 00597 | 6 | 12.2 | 0.079 |
| 2" NPT multiport valve - Configuration 3 | 07440 | 6 | 19.9 | 0.150 |

65216

22490

## Classic

### 2" TOP multiport valve

**DESCRIPTION**

6-way TOP multiport valve for residential pools. Body, cover and handle injected in ABS.

| | Code | Standard Pack | Standard weight in kg | Standard volume in m³ |
|---|---|---|---|---|
| Top 1½" Multiport valve | 65216 | 6 | 14.6 | 0.123 |
| Top 2" Multiport valve | 22490 | 1 | 3.45 | 0.028 |
| 2" TOP multiport valve NPT | 22492 | 1 | 3.45 | 0.028 |

# New Generation

- Manual multiport valves which incorporate a bayonet closing system (replacing bolts).
- This eases dismantling for maintenance and prevents rust.
- The range includes the 1½" and 2" versions, including a "Top Eco" version available in 1½".

## New generation

### 1½" multiport valve. Top ECO version

DESCRIPTION

6-way multiport valve for above ground pool filters where the pressure does not exceed 1.5 bar, of maximum diameter 380 mm. Bayonet closing system.

| | Code | Standard Pack | Standard weight in kg | Standard volume in m³ |
|---|---|---|---|---|
| 1½" multiport valve. Top ECO version | 32583 | 6 | 8.83 | 0.082 |

## New generation

### Selector valve with coupling to filter

| | Code | Standard Pack | Standard weight in kg | Standard volume in m³ |
|---|---|---|---|---|
| Configuration 3 - 1 ½" | 20569 | 6 | 14.0 | 0.079 |
| Configuration 3 - 2" | 28512 | 6 | 26.4 | 0.165 |
| Configuration 3 - 1 ½" NPT | 22355 | 6 | 14.0 | 0.079 |
| Configuration 3 - 2" NPT | 30788 | 6 | 26.4 | 0.165 |
| Configuration 3 - 2" (special distance between con. 270mm - for filter 08133) | 59968 | 6 | 24.6 | 0.165 |

## New generation

### 1½" and 2" multiport valve

| | Code | Standard Pack | Standard weight in kg | Standard volume in m³ |
|---|---|---|---|---|
| Multiport valve 1½" - Configuration 3 | 20043 | 6 | 11.5 | 0.079 |
| **Multiport valve 2":** | | | | |
| Configuration 1 | 28509 | 6 | 22.3 | 0.165 |
| Configuration 2 | 28510 | 6 | 22.3 | 0.165 |
| Configuration 3 | 28511 | 6 | 22.3 | 0.165 |
| Configuration 4 | 28513 | 6 | 22.3 | 0.165 |
| Configuration 5 | 28514 | 6 | 22.3 | 0.165 |
| Multiport valve 1½" NPT - Configuration 3 | 22356 | 6 | 11.5 | 0.079 |
| Multiport valve 2" NPT - Configuration 3 | 30795 | 6 | 22.3 | 0.165 |

# New generation

## 1½" and 2" multiport valve. Top Config.

| | Code | Standard Pack | Standard weight in kg | Standard volume in m³ |
|---|---|---|---|---|
| Top 1½" Multiport valve | 20565 | 6 | 12.10 | 0.079 |
| Top 2" Multiport valve | 33968 | 1 | 3.95 | 0.028 |
| Top 1½" NPT Multiport valve | 22358 | 6 | 12.10 | 0.079 |
| Top 1½" Multiport valve (for Aster filter) | 31993 | 6 | 11.8 | 0.124 |
| Top 2" Multiport valve (for Aster filter) | 33969 | 1 | 3.85 | 0.028 |

# Multiport valve for Clarity filter

## DESCRIPTION

This valve is valid only for the diatomaceous earth filter "Clarity".

| | Code | Standard Pack | Standard weight in kg | Standard volume in m³ |
|---|---|---|---|---|
| **Multiport valve with filter connections (config. 2)** | | | | |
| For D.E. filter 1½" | 15385 | 6 | 15.5 | 0.079 |
| For D.E. filter 2" | 15389 | 6 | 22.7 | 0.158 |

# Flat

- Multiport valve which features a special compact look thanks to its single-level design (compared to the normal twin-level set-up in other multiport valves).
- This reduced size makes the equipment especially suitable in installations where space is at a premium, such as in filter housing or monoblocks.

## Flat

### 1½" lateral multiport valve with filter connections

| | Code | Standard Pack | Standard weight in kg | Standard volume in m³ |
|---|---|---|---|---|
| Configuration 3 | 34543 | 6 | 9.3 | 0.08 |

## Flat

### 1½" lateral multiport valve - Flat

| | Code | Standard Pack | Standard weight in kg | Standard volume in m³ |
|---|---|---|---|---|
| Configuration 3 (bottom port threaded) | 34544 | 6 | 9.3 | 0.08 |
| Configuration 3 (bottom port solvent socket) | 34545 | 6 | 9.3 | 0.08 |

## Flat

### 1½" TOP multiport valve - Flat

| | Code | Standard Pack | Standard weight in kg | Standard volume in m³ |
|---|---|---|---|---|
| | 34546 | 6 | 9.3 | 0.08 |

# Magnum

- Specially designed to support high working pressures and connection to large filters which require special connections.
- Choose from the models offered: 2 ½", 3" and 4" multiport valves.

## Magnum

### 2½" multiport valve with filter connections

#### DESCRIPTION

Multiport valve wih filter connections.

| | Code | Standard Pack | Standard weight in kg | Standard volume in m³ |
|---|---|---|---|---|
| 2½" multiport valve - Configuration 3 | 24837 | 1 | 9.5 | 0.060 |
| 2½" NPT multiport valve - Config. 3 | 24840 | 1 | 9.5 | 0.060 |

## Magnum

### 2½" multiport valve

#### DESCRIPTION

Filter inlet from the side and outlet from the bottom. With threaded outlets.

| | Code | Standard Pack | Standard weight in kg | Standard volume in m³ |
|---|---|---|---|---|
| 2½" multiport valve - Configuration 3 | 24838 | 1 | 8.2 | 0.061 |
| 2½" NPT multiport valve - Config. 3 | 24839 | 1 | 8.2 | 0.061 |

## Magnum

### 3" multiport valve

#### DESCRIPTION

Side mounted multiport valve for connecting to filters. Body and cover injected in ABS with fiberglass. Handle injected in ABS. Sealing system by stainless steel screws. Supplied with two plugs so that the customer can adapt the valve to the most suitable configuration.

| | Code | Standard Pack | Standard weight in kg | Standard volume in m³ |
|---|---|---|---|---|
| 3" multiport valve | 28515 | 1 | 9.8 | 0.064 |
| 3" NPT multiport valve | 30798 | 1 | 9.8 | 0.064 |

MULTIPORT VALVES

# VRAC Flat

## 1½" automatic multiport system valve

### DESCRIPTION

Basic automatic multiport valve model that stands out for its easy operation.

Voltage 230/115 volts. Controls filtration, backwashing, rinsing and emptying.

| | Code | Standard Pack | Standard weight in kg | Standard volume in m³ |
|---|---|---|---|---|
| TOP 1"½ mutliport valve with actuator | 43512 | 1 | 4.1 | 0.02 |
| SIDE 1"½ mutliport valve with actuator | 43513 | 1 | 3.9 | 0.02 |

# VRAC III

## automatic multiport valve

### DESCRIPTION

Improved automatic multiport valve operated via button keypad. It makes possible to control filtration, backwashing, rinsing, emptying, recirculation and closed positions.

Better features to the automatic multiport valve replacing the pressure switch for an analog pressure sensor.

- Easy program of the pressure set point for backwashing - Pressing a button.
- Avoid corrosion - No metalic elements.
- Friendly set up Fluidra Connect Box - System VRAC Basic III
- Adaptable: For using in all devices with a media filter, and it is quick and easy to install.
- Comfort: With a simple programming using the keypad, you will receive a fully automated filtration for your pool.
- Hygiene: You will obtain an optimal water quality for swimming, optimizing the wash cycles (daily, weekly or by pressure monitoring).
- Safety: The automatic valve continuously monitors the filtration system and the valve, thus preventing potential breakdowns. New power surge protection. Spring coated to prevent rusting.

LED lights for quick look of basic information.

COMPATIBLE NN thing

Fluidra Connect compatible

**A multiport safety valve (code 41898 or 41899) is recommended.**

**Substituted codes:**

**72433 in substitution of 70768 and 57186.**

**72434 in substitution of 70769 and 57187**

| | Code | Standard Pack | Standard weight in kg | Standard volume in m³ |
|---|---|---|---|---|
| Basic 1½" side mounted, Config. 3 | 72433 | 1 | 4.27 | 0.023 |
| Basic 2" side mounted, Config. 3 | 72434 | 1 | 5.75 | 0.033 |

# Hydraulic safety valve

### DESCRIPTION

The 1 ½" hydraulic safety valve in the drain is specially designed for installation in the drain outlet of an automatic multiport valve on a pool sand filter.

Using it prevents water loss when the valve changes its working position or when the electricity flow fails and the valve remains in a position in which it could empty the pool.

It is recommended in installations with SYSTEM VRAC multiport valves.

| | Code | Standard Pack | Standard weight in kg | Standard volume in m³ |
|---|---|---|---|---|
| With 50 mm straight double connection | 41898 | 2 | 1.8 | 0.02 |
| With 1 ½" BSP double pipe connection | 41899 | 2 | 1.8 | 0.02 |

# Viron cartridge filter

## DESCRIPTION

- Manufactured in injection-moulded plastic and suitable for high-pressure applications.
- Easy-access closing system, filtration surfaces of 39m² or 50m² enabling prolonged intervals between each cleaning operation or cartridge replacement.
- Includes water purge, oil pressure gauge and connection accessories.
- 5-year guarantee on the tank.
- Complies with filtration requirements as per standard EN 16713-1.

Water Conservation

Complies with Standard EN 16713-01

| | Code | Standard Pack | Standard weight in kg | Standard volume in m³ |
|---|---|---|---|---|
| Viron QL 420 cartridge filter | 76340 | 1 | 40 | 0.450 |
| Viron QL 540 cartridge filter | 76341 | 1 | 40 | 0.450 |
| Filter element (1 of 4 units used) Replacement for 76340 (QL 420). | 74544 | 1 | 1.9 | 0.021 |
| Filter element (1 of 4 units used) Replacement for 76341 (QL 540). | 74545 | 1 | 2.1 | 0.021 |

## TECHNICAL FEATURES

| Model | Filtration area | Maximum flow rate | Maximum pressure | Filtration fineness |
|---|---|---|---|---|
| Viron QL 420 | 39 m² | 30 m³/h | 3.5 bar | 5-7 microns |
| Viron QL 540 | 50 m² | 30 m³/h | 3.5 bar | 5-7 microns |

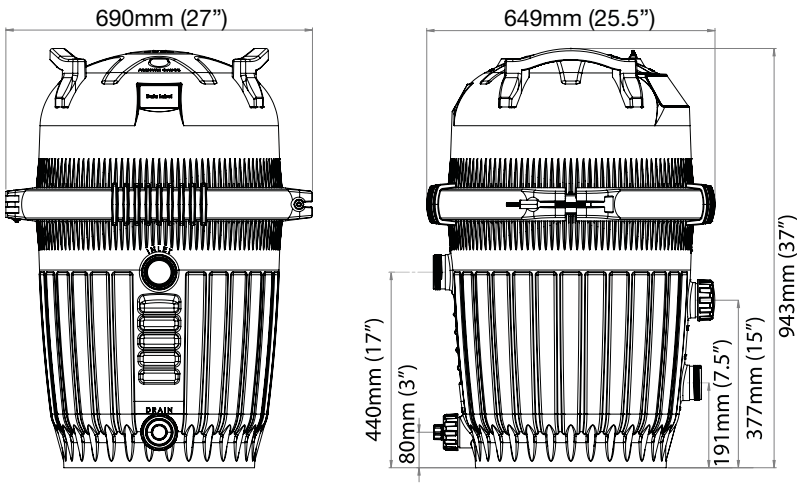

CARTRIDGE FILTERS

# Nanofiber filter

## DESCRIPTION

Filter for residential pools up to 90m³ characterised by its high-quality filtration: 5-8 microns, self-cleaning function, small size. The NanoFiber filter uses an innovative material that delivers better quality filtration due to its network of nanofibers.

- Easy to use
- Reliable
- Lower water consumption
- Higher water filtration quality
- Compact
- Easy to clean
- Dirt slow to build up without limescale
- Compatible with current filter systems on the market
- Replacement filtration media

Water Conservation

Complies with Standard EN 16713-01

| | Code | Standard Pack | Standard weight in kg | Standard volume in m³ |
|---|---|---|---|---|
| NanoFiber Auto 150 filter (10 m³/h) | 67355-0100 | 1 | 10.68 | 0.116 |
| NanoFiber Auto 180 filter (14 m³/h) | 67356-0100 | 1 | 10.68 | 0.116 |
| NanoFiber Auto 200 filter (18 m³/h) | 67357-0100 | 1 | 10.68 | 0.116 |
| Auto adaptor kit | 67509 | 1 | 3.68 | 0.027 |
| NanoFiber 150 filter (10 m³/h) | 64837-0100 | 1 | 9.68 | 0.093 |
| NanoFiber 180 filter (14 m³/h) | 64838-0100 | 1 | 9.68 | 0.093 |
| NanoFiber 200 filter (18 m³/h) | 64839-0100 | 1 | 9.68 | 0.093 |

**Auto versions can be connected to a 07444 manual valve, or a 70769 automatic valve**

## TECHNICAL FEATURES

| Model | Filtration surface area (m²) | Flow rate (m³/h) | Max. pool volume (m³) |
|---|---|---|---|
| NanoFiber 150 | 4,5 | 10 | 70 |
| NanoFiber 180 | 5,2 | 14 | 80 |
| NanoFiber 200 | 6,0 | 18 | 90 |

DIATOMACEOUS FILTERS

# Clarity filter

Complies with Standard EN 16713-01

## DESCRIPTION

Made in polyester and fibreglass. Supplied with pressure gauge, air vent and side mounted multiport valve. Filtration velocity 4.9 m³/h/m².

| | Code | Standard Pack | Standard weight in kg | Standard volume in m³ |
|---|---|---|---|---|
| **Filters Ø 600 mm** | | | | |
| 11000 l/h Outlet 1½" Model DE-24 | 11619 | 1 | 34.0 | 0.410 |
| 16400 l/h Outlet 1½" Model DE-36 | 11620 | 1 | 39.0 | 0.460 |
| 21800 l/h Outlet 2" Model DE-48 | 11621 | 1 | 44.0 | 0.550 |
| 27300 l/h Outlet 2" Model DE-60 | 11622 | 1 | 48.0 | 0.610 |

OC-1 FILTERS

# Aster OC-1 filter

Complies with Standard EN 16713-01

## DESCRIPTION

White laminated polyester and fibreglass filter. Internal parts with special sides for OC-1 media. Filter for side selector valve. ¼" air and water purge. Transparent lid with screws. Maximum temperature: 50°C Maximum pressure 2.5 bar. Maximum filtration speed 50m³/h/m². Filter for OC-1 filtration media. Not compatible with sand, glass or other filter loads.

| | Code | Standard Pack | Standard weight in kg | Standard volume in m³ |
|---|---|---|---|---|
| **With multiport side valve** | | | | |
| OC-1 Aster filter 450 | 68642 | 1 | 21 | 0.23 |
| OC-1 Aster filter 500 | 68643 | 1 | 23 | 0.28 |
| OC-1 Aster filter 600 | 68644 | 1 | 28 | 0.39 |
| OC-1 Aster filter 650 | 68645 | 1 | 29 | 0.45 |
| OC-1 Aster filter 750 | 68646 | 1 | 37 | 0.62 |
| OC-1 Aster filter 900-2" | 68647 | 1 | 55 | 1.27 |
| **Without multiport valve** | | | | |
| OC-1 Aster filter 900-2½" | 68648 | 1 | 55 | 1.27 |

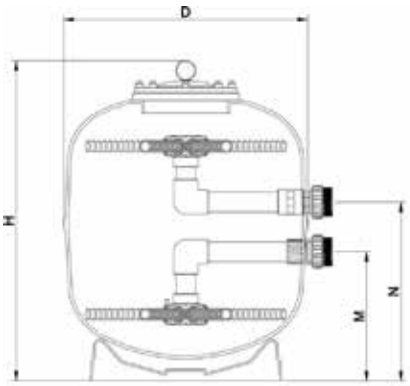


## TECHNICAL FEATURES

| | 68642 | 68643 | 68644 | 68645 | 68646 | 68647 | 68648 |
|---|---|---|---|---|---|---|---|
| Ø D (mm) | 450 | 500 | 600 | 650 | 750 | 900 | 900 |
| H (mm) | 845 | 855 | 900 | 955 | 1035 | 1100 | 1100 |
| M (mm) | 305 | 290 | 330 | 370 | 325 | 365 | 390 |
| N (mm) | 430 | 415 | 455 | 495 | 555 | 635 | 660 |
| Connections | 1½" | 1½" | 1½" | 1½" | 2" | 2" | 2½" |
| Flow (m³/h) at 50 m³/h/m² | 8 | 10 | 14 | 17 | 22 | 32 | 32 |
| Maximum pressure (kg/cm²) | 2.5 | 2.5 | 2.5 | 2.5 | 2.5 | 2.5 | 2.5 |
| Pool volume (m³) | 64 | 72 | 112 | 120 | 168 | 240 | 240 |
| Filtration surface (m²) | 0.159 | 0.196 | 0.283 | 0.332 | 0.442 | 0.636 | 0.636 |
| OC-1 volume (L) | 44 | 59 | 78 | 125 | 181 | 313 | 313 |
| OC-1 (kg) | 9 | 12 | 16 | 25 | 36 | 63 | 63 |
| Net weight (kg) | 18 | 20 | 25 | 26 | 33 | 50 | 50 |

MONOBLOCKS

# Galactic monoblock

## DESCRIPTION

Filter made made from high resistant blow-molded thermoplastic.

Includes 6-ways multiport valve, pressure gauge, manual air purge, water purge, compact self-priming pump with electrical cord and plug, hose, fittings, base and accessories to completely assembly the whole set.

Maximum working pressure 2,4 bars.

Fittings included, D38 and D50mm, for a maximum versatility to install.

Complies with filtration requirements as per standard EN 16713-1.

| | Code | Standard Pack | Standard weight in kg | Standard volume in $m^3$ |
|---|---|---|---|---|
| Ø380 - 5 $m^3$/h | 74471 | 1 | 20 | 0.33 |
| Ø400 - 6 $m^3$/h | 74472 | 1 | 20.5 | 0.33 |
| Ø500 - 8 $m^3$/h | 74473 | 1 | 24 | 0.37 |
| Ø500 - 10 $m^3$/h | 74474 | 1 | 25.5 | 0.37 |
| Ø600 - 12 $m^3$/h | 74475 | 1 | 29 | 0.42 |
| Ø600 - 14 $m^3$/h | 74476 | 1 | 30 | 0.42 |

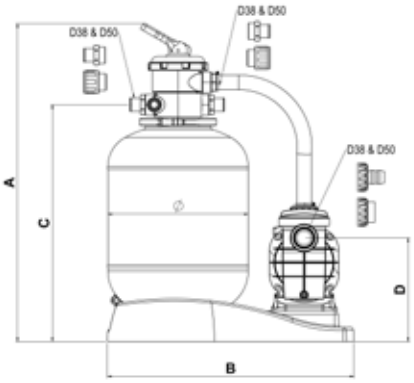


## TECHNICAL FEATURES

| | 74471 | 74472 | 74473 | 74474 | 74475 | 74476 |
|---|---|---|---|---|---|---|
| Ø (mm) | 380 | 400 | 500 | 500 | 600 | 600 |
| A (mm) | 860 | 905 | 975 | 975 | 1.030 | 1.030 |
| B (mm) | 710 | 710 | 830 | 830 | 830 | 830 |
| C (mm) | 635 | 650 | 740 | 740 | 816 | 816 |
| D (mm) | 295 | 295 | 295 | 295 | 295 | 295 |

## TECHNICAL FEATURES

| CODE | FLOW | Ø FILTER | PUMP POWER | Ø FITTINGS | SAND | BOX | |
|---|---|---|---|---|---|---|---|
| | | | | | | WEIGHT | DIMENSIONS |
| | $m^3$/h | mm | HP | mm | kg* | Kg | mm |
| 74471 | 5 | 380 | 1/3 | 38 / 50 | 40 | 20 | 790x600x700 |
| 74472 | 6 | 400 | 1/3 | 38 / 50 | 40 | 20.5 | |
| 74473 | 8 | 500 | 1/2 | 38 / 50 | 100 | 24 | 870x600x715 |
| 74474 | 10 | 500 | 3/4 | 38 / 50 | 100 | 25.5 | |
| 74475 | 12 | 600 | 3/4 | 38 / 50 | 150 | 29 | 870x600x800 |
| 74476 | 14 | 600 | 1 | 38 / 50 | 150 | 30 | |

* Sand not supplied.

# SkyPool filter monoblock

## with top outlet

Complies with Standard EN 16713-01

## DESCRIPTION

Made from plastic with a clamp lid, multi-way valve, pressure gauge, manual air outlet and water purge. White. Injection-moulded black base. Maximum working pressure: 2 kg/cm². Complies with filtration requirements as per standard EN 16713-1.

| | Code | Standard Pack | Standard weight in kg | Standard volume in m³ |
|---|---|---|---|---|
| Ø 300 mm - P-XPERT-4 | M00504 | 1 | 12 | 0.11 |
| Ø 400 mm - P-XPERT-6 | M00505 | 1 | 14 | 0.22 |
| Ø 400 mm - P-XPERT-8 | M00506 | 1 | 15 | 0.22 |
| Ø 500 mm - P-XPERT-10 | M00507 | 1 | 20 | 0.28 |
| Ø 500 mm - P-XPERT-14 | M00661 | 1 | 22 | 0.28 |

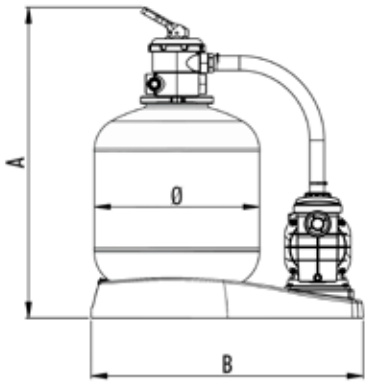


## TECHNICAL FEATURES

| | SkyPool / P-XPERT | | | | |
|---|---|---|---|---|---|
| Top monobloc | M00504 | M00505 | M00506 | M00507 | M00661 |
| A (mm) | 640 | 760 | 760 | 840 | 840 |
| B (mm) | 520 | 830 | 830 | 830 | 830 |
| Ø (mm) | 300 | 400 | 400 | 500 | 500 |
| Pump (HP) | P-XPERT4 | P-XPERT6 | P-XPERT8 | P-XPERT10 | P-XPERT14 |
| Connections | Ø 38 | Ø 38 | Ø 38 | 1½" | 1½" |
| Flow (m³/h) | 4 | 6 | 7 | 9 | 11 |
| Power (W) | 150 | 340 | 490 | 600 | 660 |
| Filtration speed (m³/m²/h) | 60 | 50 | 60 | 50 | 60 |
| Sand 0.4-0.8 mm (Kg) | ± 25 | ± 40 | ± 40 | ± 100 | ± 100 |
| Weight (Kg) | 12 | 14 | 15 | 20 | 22 |
| Volume (m³) | 0.102 | 0.226 | 0.226 | 0.278 | 0.278 |

COMPACTS WITH INTERIOR INSTALLATION

# Ramses in-ground compacts

## DESCRIPTION

Embedded housing comprising an injection-moulded reinforced polymer body and lid. Complete and ready-assembled.

Connections: Ø50 PVC tube All pool types of up to 80m³

**Components that include:**

- 1 hp pump.
- Filter (according to model).
- 6-way top valve.
- Interior PVC connections and valves.

| | Code | Standard Pack | Standard weight in kg | Standard volume in m³ |
|---|---|---|---|---|
| Ramses with Aster 550 filter | 41910 | 1 | 76 | 1.18 |
| Ramses with Millennium 560 filter | 69829 | 1 | 68 | 1.18 |

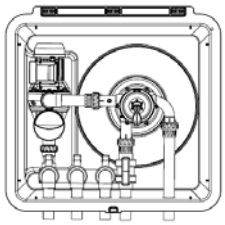

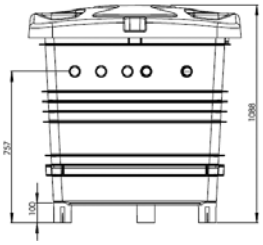


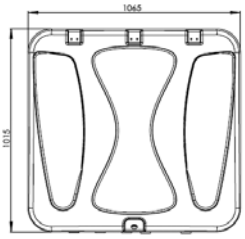

# Ramses Up above-ground compacts

## DESCRIPTION

Designed for outdoor installation. Lid with reinforced edge. Size: 149 x 82 x 120.

| | Code | Standard Pack | Standard weight in kg | Standard volume in m³ |
|---|---|---|---|---|
| With Aster 550 Sena 1 HP | 61423AS55001 | 1 | 75 | 1.5 |

See our wide range of housing according to your filtration needs

COMPACTS WITHOUT INTERIOR INSTALLATION

# In-ground compact housings

Supplied with openings for connections

## DESCRIPTION

Stackable to facilitate shipping and storage; streamlined interior to obtain top performance in the smallest possible space. Light cover with reinforced hinges. Prefabricated in polyester and fibreglass with a gelcoat finish. Outside of the cover in green and inside of the housing in ivory.

| | Code | Standard Pack | Standard weight in kg | Standard volume in m³ |
|---|---|---|---|---|
| For filters Ø 350 mm | 00615/1 | 1 | 175 | 2.02 |
| For filters Ø 400-600 mm | 00616/1 | 1 | 156.5 | 2.54 |
| For filters Ø 650-800 mm | 00618 | 1 | 126.0 | 3.87 |

# Semi in-ground compact housings

## DESCRIPTION

Prefabricated in polyester and fibreglass. Ivory. Fully opening cover.

| | Code | Standard Pack | Standard weight in kg | Standard volume in m³ |
|---|---|---|---|---|
| For filters Ø 400-600 mm | 00619/1 | 1 | 80.0 | 2.7 |
| For filters Ø 600-750 mm | 00620/1 | 1 | 145.0 | 3.2 |

# Above ground compact housings

## DESCRIPTION

Designed for outdoor installation. Lid with reinforced edge. Size: 149 x 82 x 120.

| | Code | Standard Pack | Standard weight in kg | Standard volume in m³ |
|---|---|---|---|---|
| For filters Ø 400 - 600 mm | 74970 | 1 | 25 | 0.400 |

PRE-FILTERS

# Hydrospin & Hydrospin Compact

Water Conservation

## DESCRIPTION

- Hydrocyclone pre-filters can be fitted to filtration systems in both new and old installations.
- Hydrospin is able to treat flows up to 30 m³/h with a maximum working pressure of 2.5 bars.
- It is fitted between the pump and the filter and separates out solids of up to 40 micra.
- Saves water reducing by half the amount of water consumed for cleaning the filtration system.
- Easy to use, it can be cleaned using just five liters of water without having to stop the pump.

| | Code | Standard Pack | Standard weight in kg | Standard volume in m³ |
|---|---|---|---|---|
| Hydrospin | 45289 | 1 | 7.8 | 0.088 |
| Hydrospin Compact | 53743 | 1 | 4.0 | 0.033 |
| Kit for wall installation, for 45289 | 47158 | 4 | 4.2 | 0.117 |

## TECHNICAL FEATURES

| | 45289 | 53743 |
|---|---|---|
| Working pressure (bar) | 2,5 | 2,5 |
| Connections | Ø 63 | Ø 50 thread 2¼" |
| Purge connection | 1" | ¾ |
| Min. flow rate (m³/h) | 5 | 3 |
| Max. flow rate (m³/h) | 30 | 16.5 |
| Water for cleaning (l) | 5 | 15 |
| Separate solids (micron) | 40 | 60 |
| Floor support | Included | |
| Wall support | Accessory 47158 | Included |

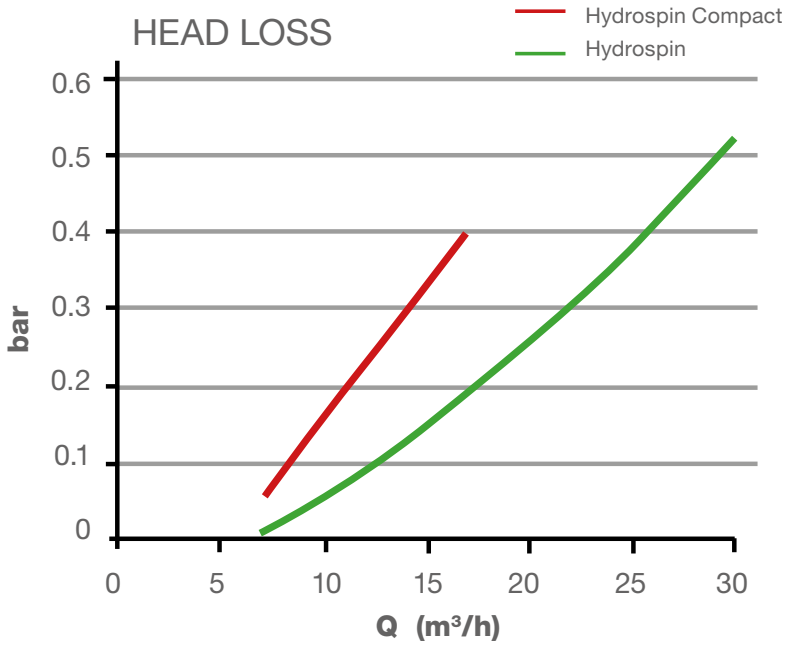

# Gauge panel unit

## DESCRIPTION

Including air vents.

| | Code | Standard Pack | Standard weight in kg | Standard volume in m³ |
|---|---|---|---|---|
| With pressure gauges 3 kg/cm² | 00729 | 1 | 1 | 0.007 |
| With pressure gauges 6 kg/cm² | 00730 | 1 | 1 | 0.007 |

# 8 lateral ring manifold

## DESCRIPTION

Made of PVC, inner Ø 50 mm.

| | Code | Standard Pack | Standard weight in kg | Standard volume in m³ |
|---|---|---|---|---|
| For ¾" collector arms. | 00624 | 12 | 4.0 | 0.017 |
| For 1" collector arms. | 06433 | 12 | 4.0 | 0.017 |

# 12 lateral ring manifold

## DESCRIPTION

Made of PVC, inner Ø 63 mm.

| | Code | Standard Pack | Standard weight in kg | Standard volume in m³ |
|---|---|---|---|---|
| For ¾" collector arms. | 00625 | 6 | 3.0 | 0.310 |
| For 1" collector arms. | 06434 | 6 | 3.0 | 0.310 |

# ¾" laterals

## DESCRIPTION

0.3 mm slots.

| | Code | Standard Pack | Standard weight in kg | Standard volume in m³ |
|---|---|---|---|---|
| Length 225 mm | 00626 | 50 | 2.0 | 0.017 |
| Length 160 mm | 00627 | 50 | 2.0 | 0.017 |
| Length 110 mm | 00628 | 50 | 2.0 | 0.008 |
| Length 100 mm (extensions) | 00629 | 50 | 2.0 | 0.008 |

# Bush coupling

## DESCRIPTION

For laterals. In PVC.

| | Code | Standard Pack | Standard weight in kg | Standard volume in m³ |
|---|---|---|---|---|
| Inside threading ¾" | 00630 | 50 | 2.0 | 0.003 |

# 1" laterals

## DESCRIPTION

0.3 mm slots.

| | Code | Standard Pack | Standard weight in kg | Standard volume in m³ |
|---|---|---|---|---|
| Length 225 mm | 06435 | 50 | 2.0 | 0.017 |
| Length 160 mm | 06436 | 50 | 2.0 | 0.017 |
| Length 110 mm | 06437 | 50 | 2.0 | 0.008 |
| Length 100 mm (extensions) | 06438 | 50 | 2.0 | 0.008 |

# For Ø 50 mm pipe

| Code | Standard Pack | Standard weight in kg | Standard volume in m³ |
|---|---|---|---|
| 00645 | 6 | 1.0 | 0.009 |

# For Ø 63 mm pipe

| Code | Standard Pack | Standard weight in kg | Standard volume in m³ |
|---|---|---|---|
| 00646 | 6 | 2.0 | 0.023 |

# FILTERS

## A COMPLETE FILTRATION RANGE

### > A FILTER FOR EVERY POOL

Central component of the filtration system, **the filter contains a filtration medium (that may be sand, glass, cartridge or another material, depending on the filter type).** So, debris and impurities are trapped in the filter tank.

An efficient filtration system is **essential for the effectiveness of water treatment.**

**Zodiac® offers 2 filter ranges to best meet varying user needs:**

### > CS CARTRIDGE FILTERS

+ very compact filters that can be installed in confined technical rooms
+ ultra-fine filtration up to 15-20 µm for translucent water
+ saves water during maintenance (no backwash)
+ no need to connect to the drain

3 YEAR WARRANTY ALL PARTS · 5 YEAR WARRANTY ON TANKS · ALL TYPES OF POOLS · FINE FILTRATION · ECO FRIENDLY · WATER CONSERVATION

### > MS MEDIA FILTERS

+ long-lasting glass-fibre reinforced polyester filters
+ designed to work with sand and filtration glass (Crystal Clear)
+ easy maintenance

3 YEAR WARRANTY ALL PARTS · 10 YEAR WARRANTY ON TANKS · ALL TYPES OF POOLS · EASY MAINTENANCE

### COMPARATIVE TABLE OF THE RANGE

| | CS<br>Eco-friendly cartridge filters for fine filtration | MS<br>Simple and long-lasting sand filters |
|---|---|---|
| Warranty | 5 years (tank) / 3 years | 10 years (tank) / 3 years |
| Easy installation | Yes (VersaPlumb® kit) | - |
| Filtration medium | CS cartridge | Glass or sand |
| Filtration level | 15 - 20 microns | 20 - 50 microns |
| Number of models | 2 | 5 |
| Footprint | 37 cm | 47-95 cm |
| Max. pool volume | 170 $m^3$ | 200 $m^3$ |
| Pressure gauge | Yes | Yes |
| Multiway valve | N / A | Yes |
| Drain | Yes (+ connection kit) | Yes, double (media + water) |

LAMINATED SAND FILTERS

# MS

+ Easy to install
+ Efficient filtration
+ Easy maintenance

PROFESSIONAL ADVICE RECOMMENDED

3 YEAR WARRANTY

10 YEAR WARRANTY ON TANK

ALL TYPES OF POOLS

EASY INTALLATION

MagnaPool ECOSYSTEM

## ACCESSORIES INCLUDED IN THE PACK

| | | | |
|---|---|---|---|
| "Classic" multiport valve kit | Pressure gauge & air relief kit | Bolts kit | Media filling cap |

## ASSOCIATED PRODUCTS

| Crystal Clear 0,7/1,3 mm - Glass media | Crystal Clear 1,0/3,0 mm - Glass media |
|---|---|
| WF000063 | WF000064 |

## PRODUCT REFERENCES

| Model | MS 470 | MS 530 | MS 650 | MS 800 | MS 950 |
|---|---|---|---|---|---|
| Standard Model | WF000094 | WF000095 | WF000096 | WF000097 | WF000098 |

## DESCRIPTION

| Model | MS 470 | MS 530 | MS 650 | MS 800 | MS 950 |
|---|---|---|---|---|---|
| Tank material | Fiberglass reinforced polyester | | | | |
| Multiport valve | 6-way side mount valve (filtration, backwash, rinse, drain, circulation, closed) | | | | |
| Pressure gauge position | Onto the top cover using a T-shape adaptor threaded into the lid | | | | |
| Connections | All connections are threaded for an easy maintenance (multiport valve & piping) | | | | |
| Drain | 3/8" (water) / 2 ½" (filter media, except for MS 470) | | | | |

## TECHNICAL SPECIFICATIONS

| Model | MS 470 | MS 530 | MS 650 | MS 800 | MS 950 |
|---|---|---|---|---|---|
| Tank diameter (mm) | 475 | 532 | 645 | 798 | 950 |
| Max flow rate ($m^3/h$)* | 8 | 10 | 16 | 23.5 | 33 |
| Filtering area ($m^2$) | 0.16 | 0.2 | 0.32 | 0.47 | 0.66 |
| Filtration capacity $m^3$ (6h/day) | 48 | 60 | 96 | 140 | 200 |
| Diameter of threaded connections | 1 ½" | | | 2" | |
| Working pressure (bar or $kg/cm^2$) | 0.2 - 0.8 (variable speed pump); 0.4 - 1.4 (single speed pump) | | | | |
| Maximum pressure (bar or $kg/cm^2$) | 2.5 | | | | |
| Total weight of Crystal Clear | 75 | 90 | 135 | 270 | 420 |
| Nbr of bags - Crystal Clear 1.0/3.0 mm | 1 | | | 2 | 3 |
| Nbr of bags - Crystal Clear 0.7/1.3 mm | 4 | 5 | 8 | 16 | 25 |
| Total weight of sand | 85 | 100 | 160 | 305 | 460 |

* : For a 50 $m^3/h/m^2$ filtration speed

| DIMENSIONS AND WEIGHT | | | | | | |
|---|---|---|---|---|---|---|
| **Model** | | **MS 470** | **MS 530** | **MS 650** | **MS 800** | **MS 950** |
| Clearance below valve* | | 310 | 320 | 375 | 390 | 420 |
| A (mm) | | 340 | 350 | 405 | 430 | 460 |
| B (mm) | | 465 | 475 | 530 | 660 | 690 |
| C (mm) | | 529 | 539 | 594 | 736 | 766 |
| D (mm) | | 705 | 745 | 815 | 984 | 1027 |
| E external (mm) | | 475 | 532 | 645 | 798 | 950 |
| E internal (mm) | | 450 | 510 | 635 | 770 | 920 |
| F (mm) | | 347 | 400 | 490 | 625 | 705 |
| Valve connections | Height spacing | 64 | 64 | 64 | 76 | 76 |
| | Width spacing | 74 | 74 | 74 | 79 | 79 |
| | Threaded ports | 1½" | 1½" | 1½" | 2" | 2" |
| Complete filter net weight (kg) | | 15 kg | 18 kg | 21 kg | 36 kg | 58 kg |

* : Clearance below multiport valve elbow pipe to show clearance for pump installation

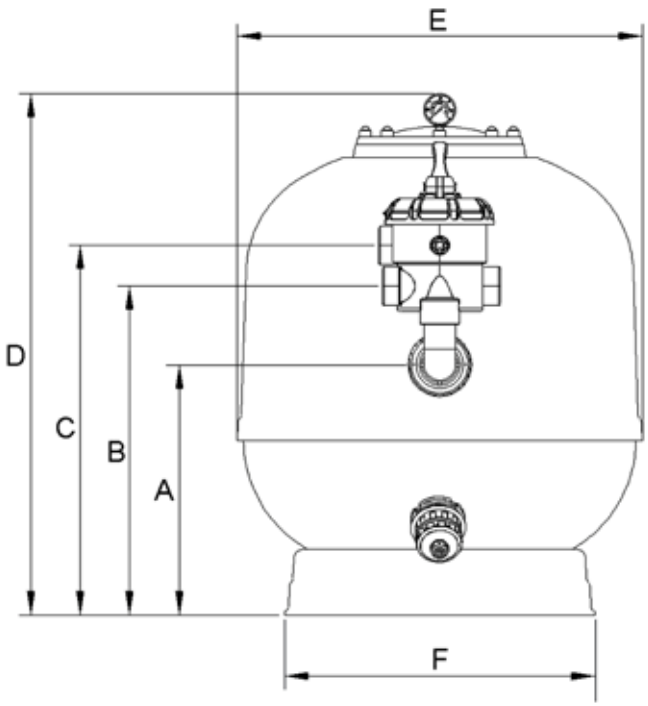

CARTRIDGE FILTERS

# CS

+ Ultra fine filtering
+ Easy maintenance and water savings
+ Adapted to any pool pad

PROFESSIONAL ADVICE RECOMMENDED

3 YEAR WARRANTY

5 YEAR WARRANTY ON TANK

ALL TYPES OF POOLS

FINE FILTRATION

ECO-FRIENDLY

WATER CONSERVATION

## ACCESSORIES INCLUDED IN THE PACK

| | | | | |
|---|---|---|---|---|
| 15-20 µm filtering cartridge | 63/50mm union tailpieces | 63/50mm union tailpieces | Pressure gauge | Air relief |

| OPTIONAL ACCESSORIES | ASSOCIATED PRODUCTS | |
|---|---|---|
| VersaPlumb® Kit | Cartridge CS 100 | Cartridge CS 150 |
| WF000026 | R0462201 | R0462301 |

## PRODUCT REFERENCES

| Model | CS 100 | CS 150 |
|---|---|---|
| Standard Model | WF000024 | WF000025 |

## DESCRIPTION

| Model | CS 100 | CS 150 |
|---|---|---|
| Tank material | Fiber glass reinforced polypropylene | |
| Pressure gauge position | Onto the top cover | |
| Connections | 63/50mm union tailpieces | |
| Drain | 63mm, 63/50mm plumbing kit provided | |

## TECHNICAL SPECIFICATIONS

| Model | CS 100 | CS 150 |
|---|---|---|
| Filtration capacity $m^3$ (6 h/day) | 130 | 170 |
| Max flow rate ($m^3$/h) | 22.7 | 28.4 |
| Filtering area ($m^2$) | 9.3 | 14 |
| Cartridge layers number | 143 | 215 |
| Filtration speed ($m^3/h/m^2$) | 2.4 | 2.1 |
| Filtration speed at 1 m/s | 0.64 $m^3/h/m^2$ | |
| Working pressure (bar or kg/$cm^2$) | 0.2 - 0.8 (variable speed pump); 0.4 - 1.2 (single speed pump) | |
| Maximum pressure (bar or kg/$cm^2$) | 3.5 | |

## PERFORMANCE

- CS filter head losses expressed in meters of water: 1 m $H_2O$ = 0.1 bar

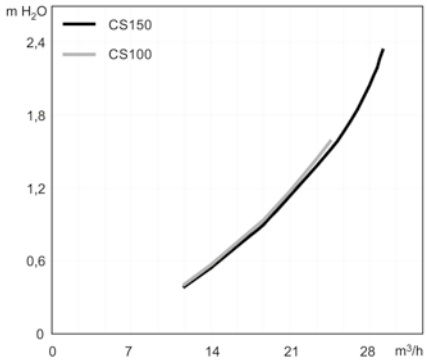


## DIMENSIONS AND WEIGHT

| Model | CS 100 | CS 150 |
|---|---|---|
| Weight (filter + cartridge) | 14 kg | 13 kg |
| Footprint (filter foot diameter) | 33 cm | |
| Overall height (with pressure gauge) | 92 cm | |
| Needed clearance (to replace cartridge) | 44 cm above the filter | |

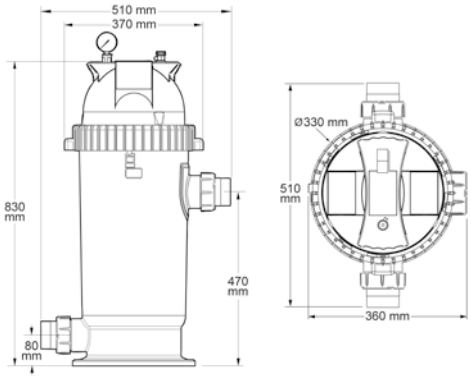


## INSTALLATION

- Optional Versa Plumb® kit allows a quick, compact and efficient connection between CS filter and any Zodiac FloPro™ pump.
- The Versa Plumb® sweep elbow is equipped with a 1/2" thread to install an earthing anode for example (see earthing anode kit in Water Treatment pages - part R0673800).

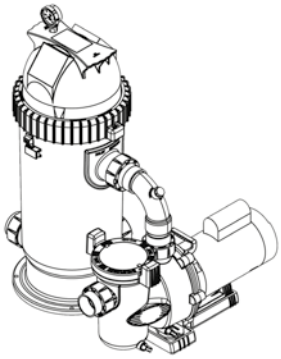

FILTRATION MEDIA

# Crystal Clear

+ Optimum filtration efficiency
+ Long lasting : lasts 3 times longer than sand
+ Eco-friendly : up to 75% water savings

ALL TYPES OF POOLS · FINE FILTRATION · PROFESSIONAL ADVICE RECOMMENDED · ECO-FRIENDLY · MagnaPool ECOSYSTEM · WATER CONSERVATION

## ASSOCIATED PRODUCTS

| MS filter | Hydroxinator® iQ | Hydroxinator® |
|---|---|---|
| WF000094/95/96/97/98 | WW000172/173/174/175 | (old model) |

## PRODUCT REFERENCES

| Model | Crystal Clear 0,7/1,3 mm | Crystal Clear 1,0/3,0 mm |
|---|---|---|
| Standard Model | WF000063 | WF000064 |

## DESCRIPTION

| Model | Crystal Clear 0,7/1,3 mm | Crystal Clear 1,0/3,0 mm |
|---|---|---|
| Contents | Filtering medium made of 100% pure glass crystals | |
| Form | Translucent | |
| Dosage | Total weight in the filter : 10% less than the equivalent in sand<br>1,0/3,0mm : sufficient to cover the filter laterals<br>0,7/1,3 mm : in addtion, to make up the total weight | |
| Filtration efficiency | 77,9% turbidity reduction* | |
| Bag dimensions (l x h) | 45 x 65 cm | |
| Bag net weight | 15 kg (= shipping unit, skus can be mixed on a pallet) | |

* Turbidity reduction test carried in a lab with Crystal Clear fine, under EN 16713-1 standard ( test §7.2.4). Regulatory requirement is 50% min.

# PUMPS

ASTRALPOOL


**246 PUMP FEATURES AND SELECTION**

**249 VARIABLE SPEED PUMPS**
- 249 Victoria Plus Silent VS
- 250 Verdon VS

**251 SINGLE SPEED PUMPS**
- 251 Victoria Plus Silent
- 252 Verdon ES
- 253 Senext XP
- 254 Sena

**255 CONTROL BOXES**

**259 COUNTERCURRENT SWIMMING EQUIPMENT - SELECTION GUIDE**

**260 COUNTERCURRENT SWIMMING EQUIPMENT - COMPLETE KITS**

**263 COUNTERCURRENT SWIMMING EQUIPMENT - ELEMENTS**

**268 COUNTERCURRENT PUMPS**


ZODIAC®


**274 VARIABLE SPEED PUMPS**
- 274 FloPro™ VS
- 276 E30iQ

**278 SINGLE SPEED PUMPS**
- 278 FloPro™

**280 PUMPS ACCESSORIES**
- 280 iQPUMP


AQUA SPHERE


**282 VARIABLE SPEED PUMPS**
- 282 VSP 150C

**283 SINGLE SPEED PUMPS**
- 283 SSP 75-100-150
- 284 SSP 200-300

**285 PUMPS ACCESSORIES**
- 285 INVERTER CONTROLLER

# ASTRALPOOL PUMPS

## EXCELLENCE AT THE HEART OF POOLS

At AstralPool, we don't just strive for good performance or innovative products but for the highest quality & reliability. Because what really makes the difference in the world of pumps is that everything goes the right way, as pumps are the heart of the pool.

And the only way to achieve this is through excellence every step of the way, from conceptualization to industrialization.

## RELIABILITY IN DESIGN AND MANUFACTURING

### A 30-YEAR-OLD EXPERTISE

At AstralPool, we have more than 30 years of experience designing, manufacturing, and supervising every aspect of the whole process in-house.

With **our 5 worldwide R&D centers** and **factories in Europe**, we are giving the best of ourselves to produce high-quality pumps as our customers deserve nothing but the best.

Our expertise has led us to become one of the market leaders, **more than 0.5 million pumps delivered annually** to the pool industry.

### EUROPEAN ENGINEERING & MANUFACTURING

We use the latest technologies such as computer-aided design and engineering (CAD/CAE) , flow and mechanical simulations (CFD/FEA) to deliver **high-performing, reliable and efficient pumps.**

Our more than a year long prototyping and industrialization processes, in which everything is adjusted to its detail, piece by piece, mould by mould, assure us that **all products are equally perfect.**

During all the processes, we ensure that the quality of our pumps meets our expectations. This is why we develop **with more than 500 R&D tests** and more than **200 endurance tests annually**. Additionally, **we test 100% of our pumps** produced in our own factory under the quality certification of ISO 9001.

## BEST IN CLASS SERVICE

Our dedicated team is here to offer an **efficient & close service** to support our customers during the whole journey through a committed sales team, detailed product training, wide logistic network and all the organization focused on customer satisfaction.

Thanks to our more than **100 Fluidra Pro centers** and direct presence in more than 35 countries, we are committed to bringing **proximity, service, and flexibility.**

**Want to know more about AstralPool pumps? Check our video by flashing this QR code.**

# A WIDE RANGE TO MEET EVERY NEED

### Variable Speed Pumps

The sustainable solution, that ensures crystal-clear water and quietness while enabling great energy savings.

### Comfort Single Speed Pumps

The widest range of pumps, able to fit any pool, that combines high performance and easy maintenance.

### Compact Single Speed Pumps

Small sized to fit everywhere, suitable for small to medium pools.

# A UNIQUE TRACK RECORD

Many emblematic institutions around the world have trusted us for their pumps. We provide pumps for all kind of installations: swimming pools, aquariums, wellness, spas, fountains and lagoons.

Asian Games – INDONESIA

Newcastle Great Exhibition of the North – UNITED KINGDOM

Aquaticum Water Park – HUNGARY

# PUMP SELECTION GUIDE

## HOW DO YOU SELECT THE PUMP THAT YOU NEED?

**The selection of the pump is essential for running a pool's water treatment system.**

**The pump is the heart of a water facility and provides the power that makes the water circulate.**

**Its main use is to filter the water so that it is clear and to ensure its full recirculation. The main steps for selecting a pump are:**

- **Setting the flow rate required depending on the pool's volume and dirt load. The flow rate must always be suitable for the filter fitted. It is very important that it neither be too slow nor too fast.**
- **Setting the pressure required depending the hydraulic facility's features.**
- **Taking into account any other units that may have been installed, such as salt chlorinators and heat pumps, whenever they involve constraints on the flow rate or pressure. For example, if a minimum flow rate is required for a unit to run.**
- **Selecting the pump ranges that supply this flow rate and pressure.**
- **Choosing the pump with the features that are best suited to a pool's requirements and those of its owner.**

**Pumps also have other uses, such as running water features and massage jets. In such cases, read the specifications for each use and select the right pump.**

**Variable speed technology delivers the highest levels of comfort and features. It is without a doubt the best choice for the most exacting users.**

### PUMP RANGES AND MAIN ADVANTAGES

To select the right pump, you can use the following table that shows the features according to pool size.

| FEATURES | |
|---|---|
| COMFORT VARIABLE SPEED | 1. Energy savings<br>2. Quiet operation<br>3. Crystal Clear water |
| COMFORT SINGLE SPEED | 1. Wide range for any pool size<br>2. Easy maintenance<br>3. High performance |
| COMPACT SINGLE SPEED | 1. For small to medium pools<br>2. Small sized to fit everywhere<br>3. Intermediate performance |

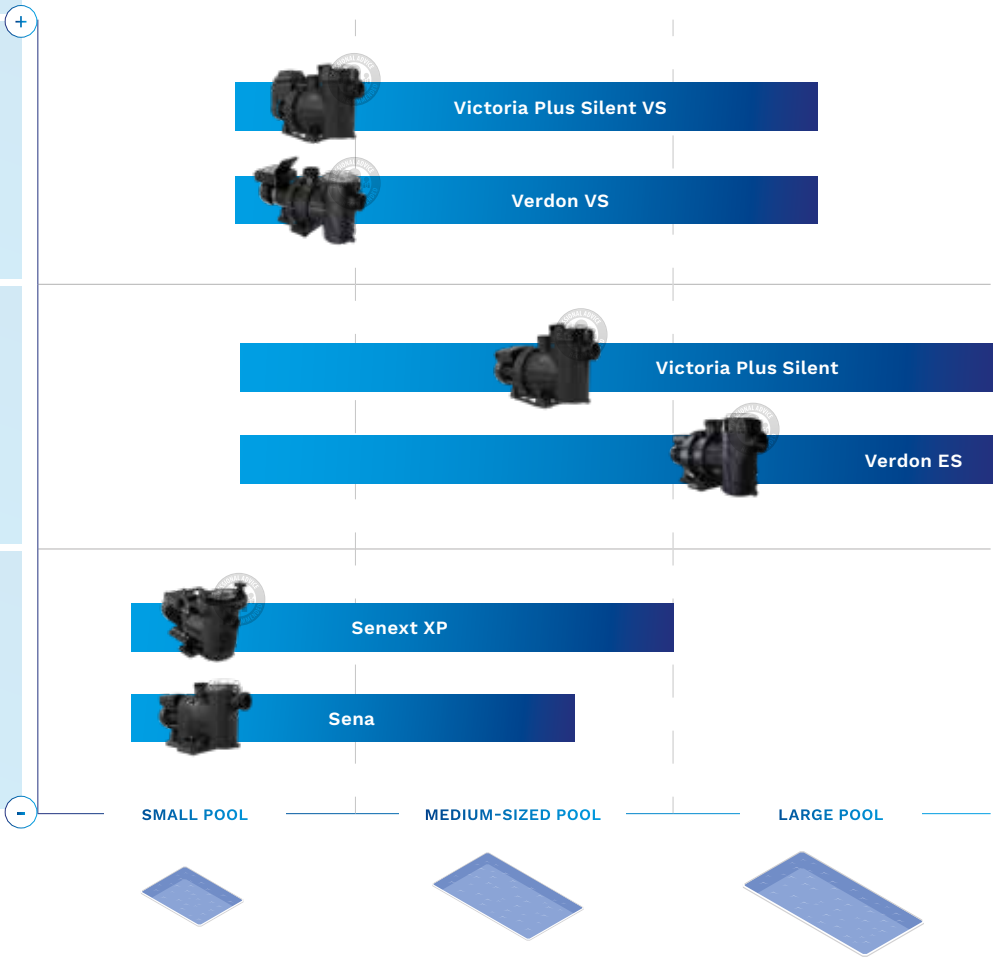

## PUMP FEATURES AND SELECTION

| | VARIABLE SPEED COMFORT | | SINGLE SPEED COMFORT | | SINGLE SPEED COMPACT | |
|---|---|---|---|---|---|---|
| | | | | | | |
| | **VICTORIA PLUS SILENT VS** | **VERDON VS** | **VICTORIA PLUS SILENT** | **VERDON ES** | **SENEXT XP** | **SENA** |
| Range | 100 - 200 | 100-200 | 50 - 300 | 50 - 300 | 33-150 | 33 - 125 |
| Flow rate range ($m^3/h$) | 17.0 - 26.0 | 15.5-25.0 | 7.5 - 35 | 7.0 - 31.0 | 5.0-21.0 | 4.5 - 17 |
| Power supply | 1~ | 1~ | 1~ and 3~ for all | 1~ from 50 to 75<br>1~ & 3~ from 100 to 300 | 1~ from 33 to 50<br>1~ & 3~ from 75 to 150 | 1~ from 33 to 50<br>1~ & 3~ from 75 to 125 |
| Hydraulic fittings | D50 to D63 or 2" | D50 or D63 | D50 to D75 or 2" | D50 to D75 | D50 | D50 |
| Couplings included | Yes<br>D50-D63 acc. to power | Yes<br>D50-D63 acc. to power | Yes<br>D50-D75 acc. to power | Yes<br>D50-D75 acc. to power | Yes<br>D50 | Yes<br>D50 |
| Full backward compatibility | Victoria Plus* | ESPA Silen S2** | Victoria Plus* | ESPA Silen S2** | HAYWARD Max-Flo**<br>SPECK Magna/Top** | |
| Prefilter size (l) | 3 | 3 | 3 | 3 | 2.0 | 0.9 |
| Efficiency | ★★★★★ | ★★★★★ | ★★★★★ | ★★★★★ | ★★★★★ | ★★★★★ |
| Noise (dBA) | 67-45 | 68-48 | 61 | 64 | 61 | 62 |
| Possible controls | Standalone<br>Dry contacts<br>Fluidra Connect remote control<br>Automated system | Standalone<br>Dry contacts<br>FluidraPool | On/Off | On/Off | On/Off | On/Off |
| Program settings | Hourly<br>3 speeds | Up to 8 slots<br>3 speeds | -- | -- | -- | -- |
| User interface | LCD display<br>Removable interface | LCD display | -- | -- | -- | -- |
| Automation compatible | Yes - Fluidra Connect | Yes<br>Fluidra Pool | -- | -- | -- | -- |
| Warranty | GARANTIA 3+1 AÑOS YEARS GUARANTEE (1) | GARANTIA 3 AÑOS YEARS GUARANTEE | GARANTIA 3+2 AÑOS YEARS GUARANTEE (1) | GARANTIA 3 AÑOS YEARS GUARANTEE | GARANTIA 3 AÑOS YEARS GUARANTEE | |

→ Table of self-priming filtration pumps for residential pools.
→ For details on backward compatibility in multi-compatibility ranges, see the product's technical specifications, catalogue or website.
→ Total efficiency (hydraulic power/electric power consumed). Comparison based on internal tests on the ranges shown in this table.
→ Noise. Based on internal tests. A 100M model for ranges with multiple powers.
→ Flow rates at 10 m.c.w. for Comfort ranges and at 8 m.c.w. for Compact ranges.
* Full backward compatibility with pump-friendly installations.
** These are thrird-party brands that are not related to Fluidra
(1) Check conditions for the warranty extension. Only available in selected countries.

# VICTORIA PLUS SILENT VS

## EXCELLENCE IN VARIABLE SPEED

### ENERGY SAVINGS

Victoria Plus Silent VS delivers a more efficient performance while reducing electricity consumption up to 85%[1].

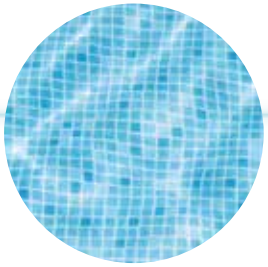

### OPTIMIZED FILTRATION QUALITY

Thanks to slower filtration, users will get the crystal-clear water they deserve, with greater transparency than with a single-speed pump.

### HIGH COMFORT

Bathers will experience a greater sense of well-being due to its reduced noise level. Its built-in controller and the ability to be remotely controlled allows doing an easy management for full peace of mind.

[1] Compared to the AstralPool Victoria Plus Silent single speed pump.

**ASTRALPOOL PUMPS. EXCELLENCE AT THE HEART OF THE POOL.**

ASTRALPOOL®

VARIABLE SPEED PUMPS

VICTORIAPLUS SILENT VS

# Victoria Plus Silent VS

+ Excellence in energy savings
+ High comfort
+ Optimized filtration quality

## DESCRIPTION

The Victoria Plus Silent pump for residential pools comes with two motor powers, has variable speeds and can be automatically controlled.

This pump has been designed for both new-build pools and as a replacement for pumps already fitted.

Significant power savings can be made thanks to the use of variable speeds and the timer.

Bathers experience a greater feeling of well-being due to the reduced noise level.

There are digital inputs and outputs for the smooth running of all pool units, such as the salt chlorinator and heat pump.

| | Code | Standard Pack | Standard weight in kg | Standard volume in m³ |
|---|---|---|---|---|
| Victoria Plus Silent VS 100 | 67547 | 1 | 19 | 0.087 |
| Victoria Plus Silent VS 200 | 67548 | 1 | 22 | 0.087 |

## TECHNICAL FEATURES

| Code | Model | Voltage | Flow at $H_N$ | Nominal Head | Maximum Head | Maximum Flow | Motor Rated Output | Maximum Abs. Power | Pipe Size |
|---|---|---|---|---|---|---|---|---|---|
| | | $U_N$ | $Q_N$ | $H_N$ | $H_{MAX.}$ | $Q_{MAX.}$ | $P_{2N}$ | $P_{1MAX}$ | D |
| | | V | m³/h | m | m | m³/h | kW | kW | mm |
| 67547 | VS 100 | 230 | 17.0 | 10.0 | 16.0 | 23.5 | 0.75 | 1.12 | D50 |
| 67548 | VS 200 | 230 | 26.0 | 10.0 | 17.5 | 33.5 | 1.49 | 1.89 | D63 |

| | 67547 | | | 67548 | | |
|---|---|---|---|---|---|---|
| | LS | MS | HS | LS | MS | HS |
| Speed (rpm) | 1400 | 2100 | 2750 | 1400 | 2100 | 2750 |
| Voltage (V) | 230 | | | 230 | | |
| Frequency (Hz) | 50 | | | 50 | | |
| Motor Rated Output (kW) | 0.75 | | | 1.49 | | |
| Max. Abs Power (kW) | 0.15 | 0.50 | 1.12 | 0.24 | 0.81 | 1.83 |
| Capacity (m³/h) | 8.7 | 13.0 | 17.0 | 13.2 | 19.9 | 26.0 |
| Differential Head (m) | 2.6 | 5.8 | 10.0 | 2.6 | 5.8 | 10.0 |
| Max. Working pressure (m) | 4.1 | 9.3 | 16.0 | 4.5 | 10.2 | 17.5 |
| Noise (dBA) | 45 | 58 | 63 | 48 | 58 | 67 |

Energy Efficient

COMPATIBLE NN thing

Fluidra Connect compatible

* Check conditions for the warranty extension. Only available in selected countries.

### Installation and control:

HMI control system on pump

HMI control system on wall

## PERFORMANCE

67547

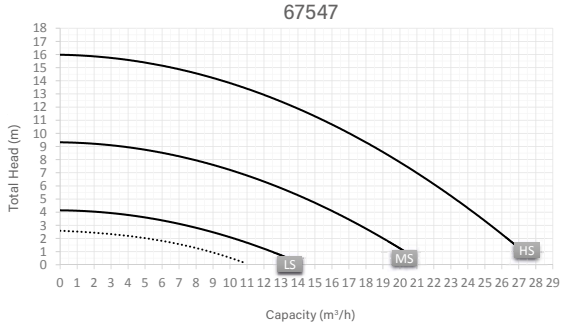


67548

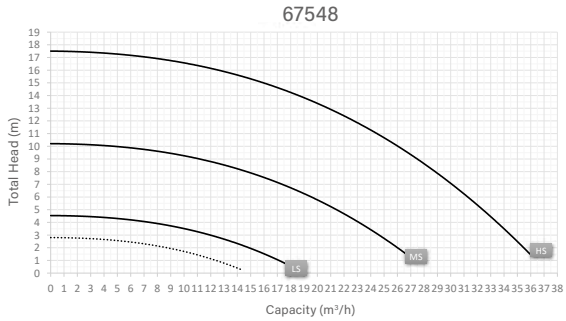

Menu-driven adjustments and settings

Intuitive weekly timer settings

Pre-set and adjustable speeds

Power consumption and savings display

VARIABLE SPEED PUMPS

# Verdon VS

+ Energy savings
+ Silent
+ Full control anywhere, anytime

Energy Efficient

**Installation and control:**

HMI control system on pump

**Fluidra Pool App control**

## DESCRIPTION

Verdon VS is a range of self-priming pumps with embedded frequency inverter, HMI and connectivity with Fluidra Pool App. Designed and produced to serve professional performance, to be reliable and with an exceptional value for money. Ease of use and maintenance.

| | Code | Standard Pack | Standard weight in kg | Standard volume in m³ |
|---|---|---|---|---|
| Verdon VS 100 | 75361 | 1 | 13.1 | 0.075 |
| Verdon VS 200 | 75362 | 1 | 13.7 | 0.075 |

## TECHNICAL FEATURES

| Code | Model | Voltage | Flow at $H_N$ | Nominal Head | Maximum Head | Maximum Flow | Motor Rated Output | Maximum Abs. Power | Pipe Size |
|---|---|---|---|---|---|---|---|---|---|
| | | $U_N$ | $Q_N$ | $H_N$ | $H_{MAX.}$ | $Q_{MAX.}$ | $P_{2N}$ | $P_{1MAX}$ | D |
| | | V | m³/h | m | m | m³/h | kW | kW | mm |
| 75361 | VS 100 | 230 | 15.5 | 10.0 | 16.0 | 23.0 | 0.75 | 0.99 | D50 |
| 75362 | VS 200 | 230 | 25.0 | 10.0 | 17.0 | 32.5 | 1.49 | 1.59 | D63 |

| | 75361 | | | 75362 | | |
|---|---|---|---|---|---|---|
| | LS | MS | HS | LS | MS | HS |
| Speed (%) | 50 | 75 | 100 | 50 | 75 | 100 |
| Voltage (V) | 230 | | | 230 | | |
| Frequency (Hz) | 50 | | | 50 | | |
| Motor Rated Output (kW) | 0.75 | | | 1.49 | | |
| Max. Abs Power (kW) | 0.17 | 0.47 | 0.99 | 0.24 | 0.73 | 1.59 |
| Capacity (m³/h) | 7.9 | 11.8 | 15.5 | 12.7 | 19.1 | 25.0 |
| Differential Head (m) | 2.6 | 5.8 | 10.0 | 2.6 | 5.8 | 10.0 |
| Max. Working pressure (m) | 4.1 | 9.3 | 16.0 | 4.4 | 9.9 | 17.0 |
| Noise (dBA) | 48 | 58 | 66 | 49 | 59 | 68 |

## PERFORMANCE

75361

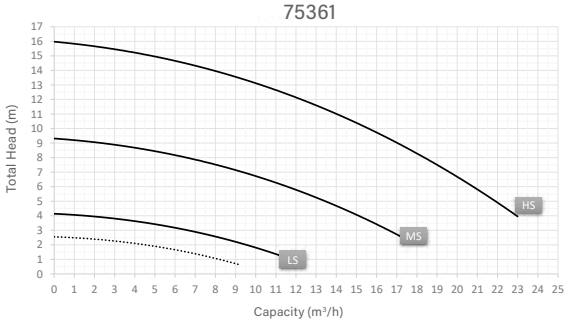


75362

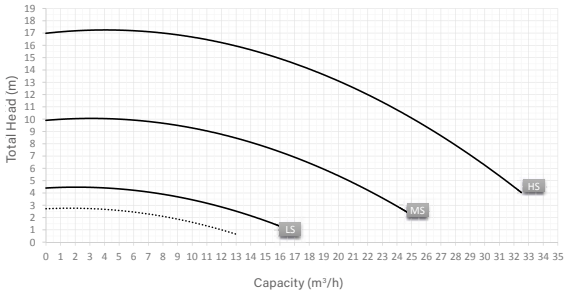

SINGLE SPEED PUMPS

# Victoria Plus Silent

+ Long service life
+ Superior performance
+ For all pools

* Check conditions for the warranty extension. Only available in selected countries.

## DESCRIPTION

A self-priming pump with single-phase and three-phase motors. A prefilter is mounted on the body of the pump to prevent foreign bodies from entering it that may damage its hydraulic parts. The motors supplied come with an IP-55 protection rating and have been prepared to withstand hot environments and high levels of humidity. The main characteristics of Victoria Plus Silent are:

- Low noise level: between 61 dB and 70 dB.
- Easy to use: Prefilter cap with 2 levers included (no spanner needed).
- Compatibility: Fully compatible in pools fitted with a Victoria Plus pump.
- Larger front bearing for improved axial thrust.
- PVC accessories assembly included in pump.

| | Code | Standard Pack | Standard weight in kg | Standard volume in m³ |
|---|---|---|---|---|
| Victoria Plus Silent 50M | 65557 | 1 | 12 | 0.07 |
| Victoria Plus Silent 50T | 65558 | 1 | 12 | 0.07 |
| Victoria Plus Silent 75M | 65560 | 1 | 13 | 0.07 |
| Victoria Plus Silent 75T | 65561 | 1 | 13 | 0.07 |
| Victoria Plus Silent 100M | 65562 | 1 | 14 | 0.07 |
| Victoria Plus Silent 100T | 65563 | 1 | 14 | 0.07 |
| Victoria Plus Silent 150M | 65564 | 1 | 17 | 0.07 |
| Victoria Plus Silent 150T | 65565 | 1 | 17 | 0.07 |
| Victoria Plus Silent 200M | 65566 | 1 | 18 | 0.07 |
| Victoria Plus Silent 200T | 65567 | 1 | 19 | 0.07 |
| Victoria Plus Silent 300M | 65569 | 1 | 23 | 0.07 |
| Victoria Plus Silent 300T | 65570 | 1 | 19 | 0.07 |

## TECHNICAL FEATURES

| REF | MODEL | Voltage | Flow at $H_N$ | Nominal Head | Maximum Head | Maximum Flow | Motor Rated Output | Maximum Absorved Power | Pipe Size |
|---|---|---|---|---|---|---|---|---|---|
| | | $U_N$ | $Q_N$ | $H_N$ | $H_{MAX.}$ | $Q_{MAX.}$ | $P_{2N}$ | $P_{1MAX}$ | D |
| | | V | m³/h | m | m | m³/h | kW | kW | mm |
| 65557 | 50M | 230 | 7.5 | 10 | 13 | 14.5 | 0.38 | 0.58 | D50 |
| 65558 | 50T | 230/400 | 7.5 | 10 | 13 | 14.5 | 0.38 | 0.55 | D50 |
| 65560 | 75M | 230 | 11 | 10 | 15 | 18 | 0.56 | 0.72 | D50 |
| 65561 | 75T | 230/400 | 11 | 10 | 15 | 18 | 0.56 | 0.72 | D50 |
| 65562 | 100M | 230 | 16 | 10 | 17 | 23.5 | 0.75 | 0.98 | D50 |
| 65563 | 100T | 230/400 | 16 | 10 | 17 | 23.5 | 0.75 | 1.02 | D50 |
| 65564 | 150M | 230 | 21.5 | 10 | 18 | 29 | 1.12 | 1.40 | D63 |
| 65565 | 150T | 230/400 | 21.5 | 10 | 18 | 29 | 1.12 | 1.40 | D63 |
| 65566 | 200M | 230 | 26 | 10 | 18 | 33.5 | 1.49 | 1.80 | D63 |
| 65567 | 200T | 230/400 | 26 | 10 | 18 | 33.5 | 1.49 | 1.80 | D63 |
| 65569 | 300M | 230 | 35 | 10 | 21 | 41 | 2.24 | 2.59 | D75 |
| 65570 | 300T | 230/400 | 35 | 10 | 21 | 41 | 2.24 | 2.40 | D75 |

Maximum flow at Head of 4 m.c.w

## PERFORMANCE

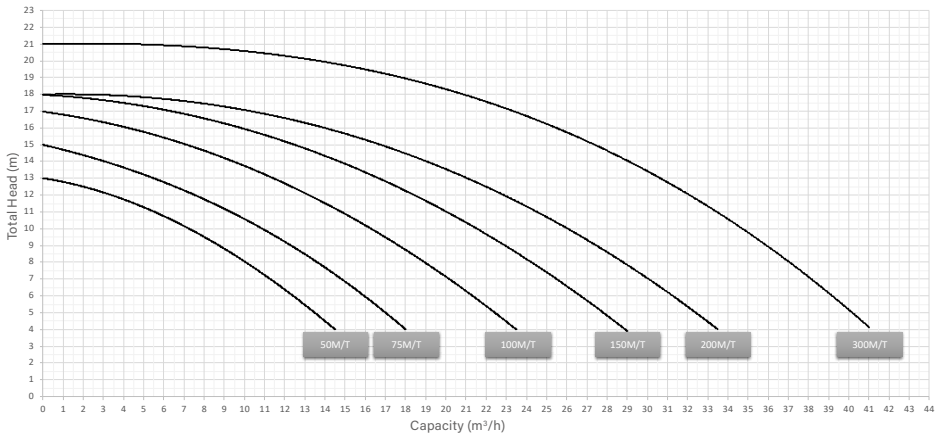

SINGLE SPEED PUMPS

# Verdon ES

+ Simple and reliable
+ For all pools
+ Easy maintenance

## DESCRIPTION

Verdon ES is a wide range of self-priming pumps. Designed and produced to serve professional performance, to be reliable and with an exceptional value for money.

Ease of use and maintenance thanks to its large prefilter.

PVC accessories included in the pump.

| | Code | Standard Pack | Standard weight in kg | Standard volume in m³ |
|---|---|---|---|---|
| Verdon ES 50M | 73676 | 1 | 12 | 0.07 |
| Verdon ES 75M | 73678 | 1 | 13 | 0.07 |
| Verdon ES 100M | 73680 | 1 | 14 | 0.07 |
| Verdon ES 100T | 73681 | 1 | 14 | 0.07 |
| Verdon ES 150M | 73682 | 1 | 17 | 0.07 |
| Verdon ES 150T | 73683 | 1 | 17 | 0.07 |
| Verdon ES 200M | 73684 | 1 | 18 | 0.07 |
| Verdon ES 200T | 73685 | 1 | 19 | 0.07 |
| Verdon ES 300M | 73686 | 1 | 23 | 0.07 |
| Verdon ES 300T | 73687 | 1 | 19 | 0.07 |

## TECHNICAL FEATURES

| REF | MODEL | Voltage | Flow at $H_N$ | Nominal Head | Maximum Head | Maximum Flow | Motor Rated Output | Maximum Absorved Power | Pipe Size |
|---|---|---|---|---|---|---|---|---|---|
| | | $U_N$ | $Q_N$ | $H_N$ | $H_{MAX.}$ | $Q_{MAX.}$ | $P_{2N}$ | $P_{1MAX}$ | D |
| | | V | m³/h | m | m | m³/h | kW | kW | mm |
| 73676 | 50M | 230 | 7 | 10 | 13.5 | 14.5 | 0.38 | 0.56 | D50 |
| 73678 | 75M | 230 | 10.5 | 10 | 14 | 18 | 0.56 | 0.73 | D50 |
| 73680 | 100M | 230 | 15.5 | 10 | 16 | 23 | 0.75 | 0.96 | D50 |
| 73681 | 100T | 230/400 | 15.5 | 10 | 16 | 23 | 0.75 | 0.96 | D50 |
| 73682 | 150M | 230 | 20.5 | 10 | 16 | 28 | 1.12 | 1.42 | D63 |
| 73683 | 150T | 230/400 | 20.5 | 10 | 16 | 28 | 1.12 | 1.35 | D63 |
| 73684 | 200M | 230 | 25 | 10 | 17 | 32.5 | 1.49 | 1.85 | D63 |
| 73685 | 200T | 230/400 | 25 | 10 | 17 | 32.5 | 1.49 | 1.85 | D63 |
| 73686 | 300M | 230 | 31 | 10 | 18 | 39 | 2.24 | 2.56 | D75 |
| 73687 | 300T | 230/400 | 31 | 10 | 18 | 39 | 2.24 | 2.35 | D75 |

Maximum flow at Head of 4 m.c.w

## PERFORMANCE

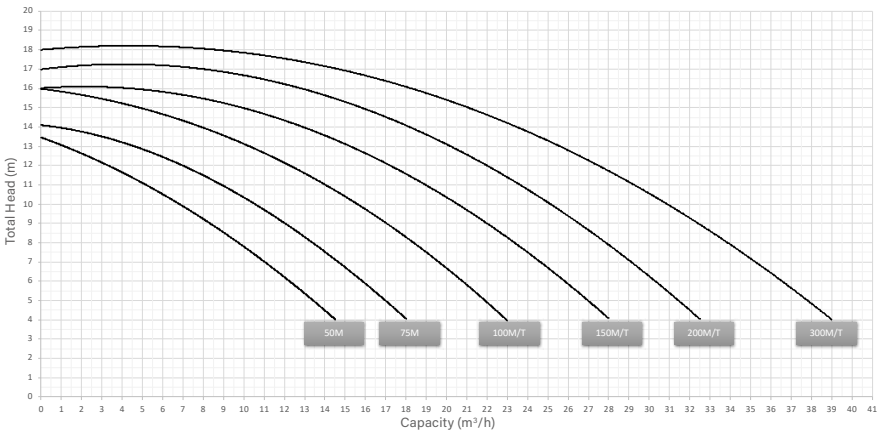

SINGLE SPEED PUMPS

# Senext XP

+ Small-sized to fit everywhere
+ Big performance
+ Easy installation and maintenance

## DESCRIPTION

Range of compact self-priming pumps with single-phase and three-phase motors.

Engineered and built to perform outstandingly, for a long service with high reliability.

The main characteristics of Senext XP are:

- **Small-sized to fit everywhere.** As a result of its compact design, its footprint is reduced by 25%[1] and can fit even in the smallest technical rooms.
- **Big performance.** Senext XP pump provides 12% improvement in hydraulic performance and 13%[2] in efficiency.
- **Easy installation.** Thanks to its retrofit platform and ist specific fittings, this range of pumps can be easily connected to any installation
- **Easy maintenance.**
  - Extra large pre-filter basket of 2 liters
  - Tool-free easy-to-open prefilter cap
  - Double water drainage plug for hibernation

[1] Senext XP 100M compared to AstralPool Victoria Plus Silent pump
[2] Senext XP 100M compared to AstralPool Sena 100M

| | Code | Standard Pack | Standard weight in kg | Standard volume in m³ |
|---|---|---|---|---|
| Senext XP 33M | 71616 | 1 | 11.95 | 0.052 |
| Senext XP 50M | 71617 | 1 | 11.95 | 0.052 |
| Senext XP 75M | 71618 | 1 | 12.98 | 0.052 |
| Senext XP 75T | 71619 | 1 | 12.48 | 0.052 |
| Senext XP 100M | 71620 | 1 | 13.35 | 0.052 |
| Senext XP 100T | 71621 | 1 | 13.35 | 0.052 |
| Senext XP 150M | 71622 | 1 | 16.98 | 0.052 |
| Senext XP 150T | 71623 | 1 | 16.05 | 0.052 |

## TECHNICAL FEATURES

| REF | MODEL | Voltage | Flow at $H_N$ | Nominal Head | Maximum Head | Maximum Flow | Motor Rated Output | Maximum Absorved Power | Pipe Size |
|---|---|---|---|---|---|---|---|---|---|
| | | $U_N$ | $Q_N$ | $H_N$ | $H_{MAX.}$ | $Q_{MAX.}$ | $P_{2N}$ | $P_{1MAX}$ | D |
| | | V | m³/h | m | m | m³/h | kW | kW | mm |
| 71616 | 33M | 230 | 5 | 8 | 10 | 10 | 0.38 | 0.35 | D50 |
| 71617 | 50M | 230 | 8.5 | 8 | 11 | 14 | 0.38 | 0.50 | D50 |
| 71618 | 75M | 230 | 12 | 8 | 14 | 17 | 0.56 | 0.65 | D50 |
| 71619 | 75T | 400 | 12 | 8 | 14 | 17 | 0.56 | 0.65 | D50 |
| 71620 | 100M | 230 | 15.5 | 8 | 17 | 20 | 0.75 | 0.88 | D50 |
| 71621 | 100T | 400 | 15.5 | 8 | 17 | 20 | 0.75 | 0.88 | D50 |
| 71622 | 150M | 230 | 21 | 8 | 20 | 25.5 | 1.12 | 1.30 | D50 |
| 71623 | 150T | 400 | 21 | 8 | 20 | 25.5 | 1.12 | 1.30 | D50 |

Maximum flow at Head of 4 m.c.w

## PERFORMANCE

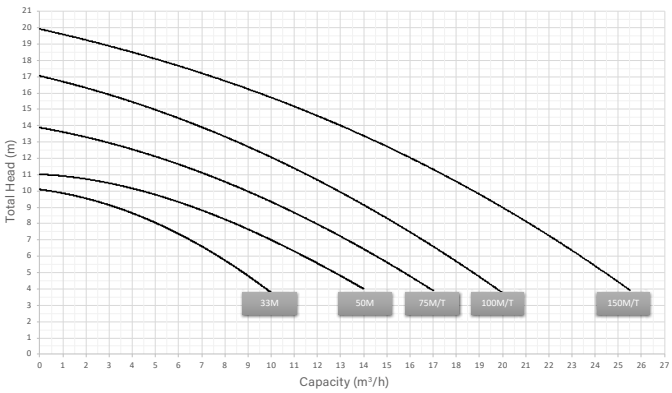

SINGLE SPEED PUMPS

# Sena

+ Simple and reliable
+ Small sized to fit everywhere
+ For small to medium sized pools

## DESCRIPTION

A compact self-priming pump with single-phase and three-phase motors. IP-55 protection rating, Class F insulation and AISI-316 stainless steel for all components in direct contact with water.

| | Code | Standard Pack | Standard weight in kg | Standard volume in m³ |
|---|---|---|---|---|
| Sena 33M | 25461 | 1 | 10.20 | 0.055 |
| Sena 50M | 25462 | 1 | 10.20 | 0.055 |
| Sena 75M | 25463 | 1 | 11.65 | 0.055 |
| Sena 75T | 25464 | 1 | 11.40 | 0.055 |
| Sena 100M | 25465 | 1 | 12.75 | 0.055 |
| Sena 100T | 25466 | 1 | 13.00 | 0.055 |
| Sena 125M | 25467 | 1 | 13.75 | 0.055 |
| Sena 125T | 25468 | 1 | 13.55 | 0.055 |

## TECHNICAL FEATURES

| REF | MODEL | Voltage | Flow at $H_N$ | Nominal Head | Maximum Head | Maximum Flow | Motor Rated Output | Maximum Absorved Power | Pipe Size |
|---|---|---|---|---|---|---|---|---|---|
| | | $U_N$ | $Q_N$ | $H_N$ | $H_{MAX.}$ | $Q_{MAX.}$ | $P_{2N}$ | $P_{1MAX}$ | D |
| | | V | m³/h | m | m | m³/h | kW | kW | mm |
| 25461 | 33M | 230 | 4.5 | 8 | 9.0 | 10.5 | 0.25 | 0.41 | D50 |
| 25462 | 50M | 230 | 8.5 | 8 | 11.0 | 13.0 | 0.38 | 0.56 | D50 |
| 25463 | 75M | 230 | 11.5 | 8 | 14.0 | 14.5 | 0.56 | 0.73 | D50 |
| 25464 | 75T | 230/400 | 11.5 | 8 | 14.0 | 14.5 | 0.56 | 0.73 | D50 |
| 25465 | 100M | 230 | 14.5 | 8 | 14.0 | 19.0 | 0.56 | 0.91 | D50 |
| 25466 | 100T | 230/400 | 14.5 | 8 | 14.0 | 19.0 | 0.56 | 0.91 | D50 |
| 25467 | 125M | 230 | 17.0 | 8 | 15.5 | 20.5 | 0.75 | 1.06 | D50 |
| 25468 | 125T | 230/400 | 17.0 | 8 | 15.5 | 20.5 | 0.75 | 1.06 | D50 |

Maximum flow at Head of 4 m.c.w

## PERFORMANCE

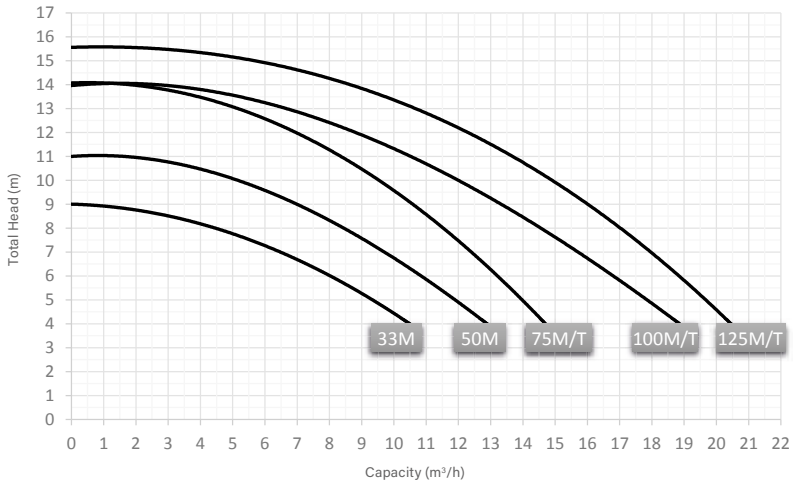

- IP-65 protection.
- Glass panel with lock and key.
- All units are compatible with:
  - 220/240V 1-phase (P+N+T) 50Hz/60Hz
  - 380/415V 3-phase (3P+N+T) 50Hz/60Hz
  - 220/230V 3-phase (3P+T) 50Hz/60Hz
- 24h programming clock with hourly programming.
- Connection for remote control of pump (on/off,...) and for auxiliary equipment (cold detector, level control...).
- All products supplied with:
  - Electrical diagram
  - Connection diagram
  - Instructions for installation
  - CE conformity certificate
  - Stuffing box at every cable entrance
  - Screws and plugs (4) for fixing to wall
- The control box model should be selected according to the nominal voltage of the pump:

## TECHNICAL FEATURES

| Type | Intensity range | Power Range 1-phase 230V | Power Range 3-phases 400V | Power Range 3-phases 230V |
|---|---|---|---|---|
| A | 1.6A - 2.5A | ¼ HP | ¾ HP - 1 HP | ½ HP |
| B | 2.5A - 4A | ½ HP | 1.5 HP - 2 HP | ¾ HP - 1 HP |
| C | 4A - 6.3A | ¾ HP - 1 HP | 3 HP* | 1.5 HP |
| D | 6A - 10A | 1.5 HP | 4 HP** | 2 HP - 3 HP |

* Also 3.5 hp 400V 3~ in plastic (code 08003)
** Also 4.5 and 5.5 hp 400 V 3~ in plastic (codes 08004, 08005)

# Control box for pump overload protection

Complies with Standard EN 16582-1:2015

## DESCRIPTION

Thermal overload protection (1.6 to 10A), contactor, 24 hr programming clock, modular switch with 3 positions, Auto / 0 / Manual.

| | Code | Standard Pack | Standard weight in kg | Standard volume in m³ |
|---|---|---|---|---|
| Type A | 25717 | 1 | 1.9 | 0.014 |
| Type B | 25718 | 1 | 1.9 | 0.014 |
| Type C | 25719 | 1 | 1.9 | 0.014 |
| Type D | 25720 | 1 | 1.9 | 0.014 |

# Control box

## for pump overload protection and underwater light

## DESCRIPTION

Thermal overload protection (1.6 to 10A), contactor, 24 hr programming clock, modular switch with 3 positions: Auto / 0 / Manual.

| | Code | Standard Pack | Standard weight in kg | Standard volume in m³ |
|---|---|---|---|---|
| Type A | 25721 | 1 | 2.3 | 0.014 |
| Type B | 25722 | 1 | 2.3 | 0.014 |
| Type C | 25723 | 1 | 2.3 | 0.014 |
| Type D | 25724 | 1 | 2.3 | 0.014 |

# Control box for pumps overload protection and underwater light with differential protection

## DESCRIPTION

Thermal overload protection (1.6 to 10A), contactor, 24 hr programming clock.
Three positions: Auto/0/manual. Protected 230 V 10 A output and controlled for underwater projectors. Single-phase.

| | Code | Standard Pack | Standard weight in kg | Standard volume in m³ |
|---|---|---|---|---|
| Type A | 25725 | 1 | 2.1 | 0.014 |
| Type B | 25726 | 1 | 2.1 | 0.014 |
| Type C | 25727 | 1 | 2.1 | 0.014 |
| Type D | 25728 | 1 | 2.1 | 0.014 |

# Control box for pump overload protection and underwater light with differential protection

## DESCRIPTION

Thermal overload protection (1.6 to 10A), contactor, 24 hr programming clock.
Three positions: Auto/0/manual. Protected 230 V 10 A output and controlled for lights. Three phases. Three-phase.

| | Code | Standard Pack | Standard weight in kg | Standard volume in m³ |
|---|---|---|---|---|
| Type A | 25729 | 1 | 2.4 | 0.015 |
| Type B | 25730 | 1 | 2.4 | 0.015 |
| Type C | 25731 | 1 | 2.4 | 0.015 |
| Type D | 25732 | 1 | 2.4 | 0.015 |

# Control box for pump overload protection and 1 set of LED underwater lights

## DESCRIPTION

Control box for pump overload protection and 1 set of LED underwater lights.
Thermal overload protection (1.6 to 10A), contactor, 24 hr programming clock.
Three positions: Auto/0/manual. 12V 100VA. Protected output for 1 set of LED underwater lights.

| | Code | Standard Pack | Standard weight in kg | Standard volume in m³ |
|---|---|---|---|---|
| Type A | 74991 | 1 | 4.6 | 0.021 |
| Type B | 74992 | 1 | 4.6 | 0.021 |
| Type C | 74993 | 1 | 4.6 | 0.021 |
| Type D | 74994 | 1 | 4.6 | 0.021 |

# Control box for pump overload protection and 1 underwater light

## DESCRIPTION

Control box for pump overload protection and 1 underwater light.
Thermal overload protection (1.6 to 10A), contactor, 24 hr programming clock.
Three positions: Auto/0/manual. 12 V 315. Protected output for 1 underwater light.

| | Code | Standard Pack | Standard weight in kg | Standard volume in m³ |
|---|---|---|---|---|
| Type A | 69916 | 1 | 6 | 0.021 |
| Type B | 69917 | 1 | 6 | 0.021 |
| Type C | 69918 | 1 | 6 | 0.021 |
| Type D | 69919 | 1 | 6 | 0.021 |

# Control box for pump overload protection and 2 underwater lights

## DESCRIPTION

Thermal overload protection (1.6 to 10A), contactor, 24 hr programming clock.
Three positions: Auto/0/manual. 12 V 630. Protected output for 2 underwater lights.

| | Code | Standard Pack | Standard weight in kg | Standard volume in m³ |
|---|---|---|---|---|
| Type A | 69920 | 1 | 8 | 0.021 |
| Type B | 69921 | 1 | 8 | 0.021 |
| Type C | 69922 | 1 | 8 | 0.021 |
| Type D | 69923 | 1 | 8 | 0.021 |

# Control box with overload protection for 2 pumps and control for 1 underwater light

## DESCRIPTION

Circuit breaker protection (2 pumps of 1.6 at 10 A), contactor and 24 h timer. Three positions: Auto/0/manual.
Protected 230 V 10 A output for lights. Protected 12 V 315 VA output for 1 underwater light.

| | Code | Standard Pack | Standard weight in kg | Standard volume in m³ |
|---|---|---|---|---|
| Type C + Type D | 70429 | 1 | 7.5 | 0.024 |
| Type D + Type D | 70422 | 1 | 7.5 | 0.024 |

# Control box with protection for 2 pumps and control for 2 underwater lights

## DESCRIPTION

Thermal overload protection (1srt pump: 4 poles, 10 A max. / 2nd pump: 2 poles, 10 A max.), contactor, 24 hr. programming clock, modular switch "Auto / 0 / Manual". Transformer 230/12 V -600VA for 2 underwater light of 300W.

| | Code | Standard Pack | Standard weight in kg | Standard volume in m³ |
|---|---|---|---|---|
| Type C + Type D | 70423 | 1 | 9.5 | 0.024 |
| Type D + Type D | 70424 | 1 | 9.5 | 0.024 |

# Control box with protection for 1 pump and control for 3 underwater lights

## DESCRIPTION

Thermal overload protection (4 poles, 10 A max.), contactor, 24 hr. programming clock, modular switch "Auto / 0 / Manual". Transformer 230/12 V -600VA + 300VA for 3 underwater light of 300W.

| | Code | Standard Pack | Standard weight in kg | Standard volume in m³ |
|---|---|---|---|---|
| Type A | 70425 | 1 | 10.4 | 0.024 |
| Type B | 70426 | 1 | 10.4 | 0.024 |
| Type C | 70427 | 1 | 10.4 | 0.024 |
| Type D | 70428 | 1 | 10.4 | 0.024 |

# Encapsulated security transformer IP-65 for pool

## DESCRIPTION

Manufactured according to the rules UNE-EN 61558 and directive CE.

- IP-657 housing protection degree.
- Transformer Class II. total protection against electric shock.
- Self-extinguishing housing IEC 695-2-1.
- Frequency 50/60 Hz.

| | Code | Standard Pack | Standard weight in kg | Standard volume in m³ |
|---|---|---|---|---|
| 130 VA from 220-240V to 12 V | 35807 | 1 | 3.2 | 0.02 |
| 400 VA to 220-240V to 12-17 V | 35385 | 1 | 6.8 | 0.04 |
| 800 VA from 220-240V to 12-17 V | 35386 | 1 | 10.4 | 0.04 |

| EQUIPMENT WITH STAINLESS STEEL HOUSING | EQUIPMENT WITH PLASTIC HOUSING | TWIN EQUIPMENT |
|---|---|---|

## GRAB RAILS

| S.S. hand grip 65535 | Rectang. Polished S.S. 00246 | Rectang. Painted S.S. 09447 | Round Painted S.S. 07536 | Demi-circular Polished S.S. 37214 | S.S. hand grip 65535 | Rectang. Polished S.S. 00246 | Rectang. Painted S.S. 09447 | Round Painted S.S. 07536 | Demi-circular Polished S.S. 37214 | Polished S.S. 05557 |
|---|---|---|---|---|---|---|---|---|---|---|

## GRAB RAILS

NOZZLE SET | NOZZLE SET | NOZZLE SET | NOZZLE SET | NOZZLE SET | NOZZLE SET

| Basic NL | Rectang. Plastic white | Round Plastic white | Basic NL | Rectang. Plastic white | Round Plastic white | With hand grips built-in white plastic | Rectangular plastic white |
|---|---|---|---|---|---|---|---|
| 65489 | 11501 | 11500 | 65489 | 11015 | 11016 | 11013 | 11508 |

## HOUSING

| For concrete pool | For prefabricated pool |
|---|---|

| Housing in S.S. 00243 | Housing in S.S. 00243 + Accessories 00248 |
|---|---|

## HOUSING

| For concrete pool | For prefabricated pool |
|---|---|

| Housing in plastic 11502 | Housing 11502 + Accessories 11503 |
|---|---|

## HOUSING

| For concrete pool | For prefabricated pool |
|---|---|

| Housing in S.S. 05555 | Housing in S.S. 05555 + Accessories 05558 |
|---|---|

## PUMPS

| | |
|---|---|
| 230 V II 1.5 kW (2 HP) | 11505 |
| 230 V II 2.2 kW (3 HP) | 25415 |
| 230/400 V III 2.60 kW (3.5 HP) | 11504 |

| | |
|---|---|
| 230 V II 1.5 kW (2 HP) | 28566 |
| 230 V II 2.2 kW (3 HP) | 28568 |
| 230/400 V III 2.2 kW (3 HP) | 30774 |

| | |
|---|---|
| 230/400 V III 3.3 kW (4.5 HP) | 11509 |
| 230/400 V III 4 kW (5.5 HP) | 65549 |

## PUMPS

| | |
|---|---|
| 230/400 V III 3.3 kW (4.5 HP) | 11509 |
| 230/400 V III 4 kW (5.5 HP) | 65549 |

## CONTROL BOXES

| | |
|---|---|
| 230 V II 1.5 kW (2 HP) | 11507 |
| 230 V II 2.2 kW (3 HP) | 25456 |
| 400 V III 2.2 kW (3 HP) | 32151 |
| 230/400 V III 2.6 kW (3.5 HP) | 11506 |
| 400 V III 3.3 kW (4.5 HP) | 11510 |
| 400 V III 4 kW (5.5 HP) | 65536 |

## CONTROL BOXES

| | |
|---|---|
| 400 V III 3.3 kW (4.5 HP) | 11510 |
| 400 V III 4 kW (5.5 HP) | 65536 |

# Basic NL countercurrent nozzle set

## DESCRIPTION

Countercurrent nozzle set in polished AISI-316L stainless steel front cover, interchangeable with nozzle sets 11499 and 11014, multi-directional water-air return nozzle, and suction capacity 60 m³/h, and on-off push button. Optional hand grip (code 65535).

| | Code | Standard Pack | Standard weight in kg | Standard volume in m³ |
|---|---|---|---|---|
| Basic NL nozzle set for both stainless steel and plastic housing | 65489 | 1 | - | - |

# Basic ND countercurrent kit

## DESCRIPTION

Countercurrent kit made up of:

- Return inlet (air-water) made of AISI-316 stainless steel.
- Illuminated ON-OFF piezoelectric push button made of AISI-316 stainless steel.
- 2 suction grilles with capacity of 30m³/h made of polished AISI-316 stainless steel
- 5.5 HP pump.
- Flow rate of 60 m³/h.
- Power control cabinet.

| | Code | Standard Pack | Standard weight in kg | Standard volume in m³ |
|---|---|---|---|---|
| Basic ND unit for concrete pools | 65498 | 1 | - | - |
| Basic ND unit for liner pools | 66044 | 1 | - | - |

Basic ND works only at 400 V III.

# Advance ND countercurrent kit

## DESCRIPTION

Countercurrent kit made up of:

- Return inlet (air-water) made of polished AISI-316 stainless steel.
- Illuminated ON-OFF and +/- piezoelectric push button made of AISI-316 stainless steel.
- 2 suction grilles with capacity of 30 m³/h made of polished AISI-316 stainless steel.
- 5.5 HP pump.
- Flow rate adjustable from 23 m³/h to 60 m³/h thanks to a variable-speed drive.
- Power control cabinet.

| | Code | Standard Pack | Standard weight in kg | Standard volume in m³ |
|---|---|---|---|---|
| Advance ND unit for concrete pools | 65497 | 1 | - | - |
| Advance ND unit for liner pools | 66043 | 1 | - | - |

Advance ND works only at 400 V III

**For all products on this page**

Complies with Standard
EN 13451-1-3

Complies with Standards
EN 16582-1
EN 16713-2

# Marlin XS countercurrent

## swimming equipment

### DESCRIPTION

Set nozzle Mini Eco counter current unit. Highly competitive in its hydraulic performance. It can be installed in both concrete and prefabricated pools. Manufactured in white plastic parts. Consists of front panel nozzle set, stop/start push button and housing. Supplied with installation kit. Does not include pump or control box.

| | Code | Standard Pack | Standard weight in kg | Standard volume in m³ |
|---|---|---|---|---|
| Marlin XS | 45618 | 1 | 1.553 | 0.015 |

### Marlin:

- **Inexpensive countercurrent swimming unit.**
- **The innovative design and concept supplied as a kit (including face plate, housing, control box and pump) makes it a feature that will add significant value to your pool.**
- **A highly competitive product thanks to its high performance hydraulic features, the Marlin countercurrent system is available in 3 models: the Marlin 30 II, the Marlin 30 III and the Marlin 45 III.**
- **Grab rails and hydromassage hose may be added as optional features.**

# Marlin 30 II (single-phase)

### DESCRIPTION

Consists of: Nozzle faceplate, plastic housing, control box and pump 2.2 kW (3 HP) 230 V II 50 Hz.

| | Code | Standard Pack | Standard weight in kg | Standard volume in m³ |
|---|---|---|---|---|
| Marlin 30 II | 35375 | 1 | 37.4 | 0.260 |

# Marlin 30 III (three-phase)

### DESCRIPTION

Consists of: Nozzle faceplate, plastic housing, control box and pump 2.2 kW (3 HP) 400 V III 50 Hz.

| | Code | Standard Pack | Standard weight in kg | Standard volume in m³ |
|---|---|---|---|---|
| Marlin 30 III | 35376 | 1 | 37.4 | 0.260 |

# Marlin 45 III (three-phase)

## DESCRIPTION

Consists of: Nozzle faceplate, plastic housing, control box and pump 3.3 kW (4.5 HP) 400 V III 50 Hz.

**Part 11503 required for liner pools.**

| | Code | Standard Pack | Standard weight in kg | Standard volume in $m^3$ |
|---|---|---|---|---|
| Marlin 45 III | 35377 | 1 | 42.2 | 0.260 |

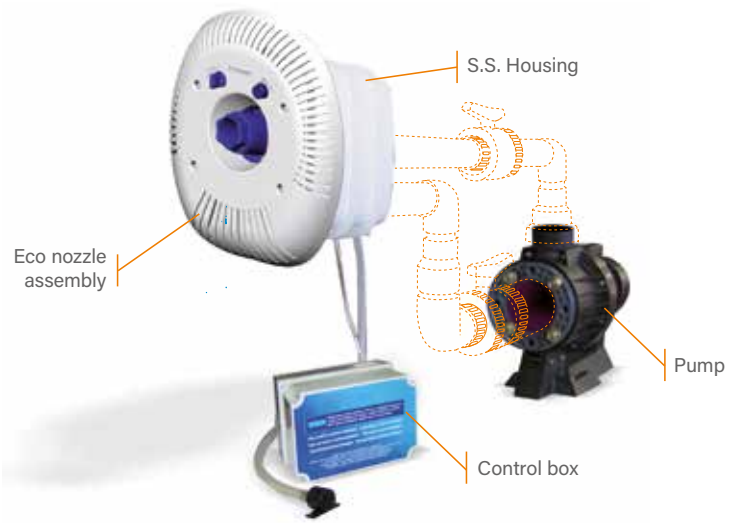


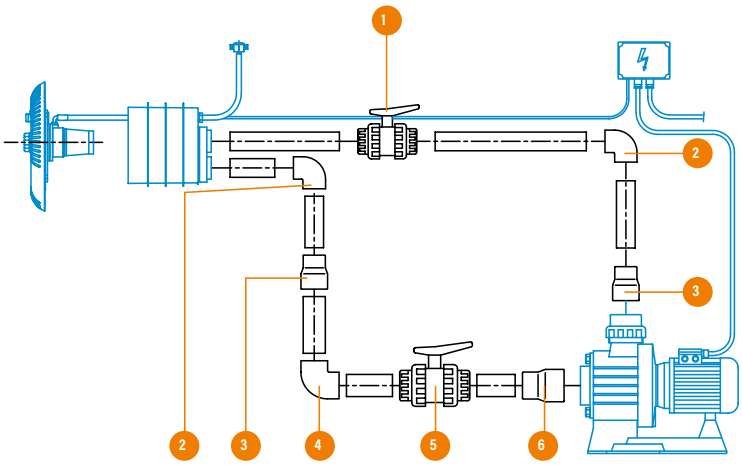


## ACCESSORIES (NOT INCLUDED IN THE KIT)

| Position | Quantity | Denomination | Code |
|---|---|---|---|
| 1 | 1 | PVC Ball valve Ø63 mm | 02458 |
| 2 | 2 | PVC elbow 90° Ø63 mm | 01717 |
| 3 | 2 | Conical reduction Ø90-75x63 mm | 01993 |
| 4 | 1 | PVC elbow 90° Ø75 mm | 01718 |
| 5 | 1 | PVC Ball valve Ø75 mm | 02459 |
| 6 | 1 | Conical reduction Ø110-90x75 mm | 01997 |
| - | - | PVC pipe Ø 63 mm PN-6 | 02692 |
| - | - | PVC pipe Ø75 mm PN-6 | 02693 |

# Nozzle assemblies

## with round front plate in white plastic

### DESCRIPTION

Made up of: Front plate, nozzle assembly, on-off and air regulation remote control.

Components in AISI-316 stainless steel.

| | Code | Standard Pack | Standard weight in kg | Standard volume in m³ |
|---|---|---|---|---|
| For stainless steel housing | 11500 | 1 | 5.0 | 0.045 |
| For plastic housing | 11016 | 1 | 4.4 | 0.056 |

# Nozzle assemblies

## with rectangular front plate in white plastic

### DESCRIPTION

Made up of: Front plate, nozzle assembly, on-off and air regulation remote control.

Components in AISI-316 stainless steel.

| | Code | Standard Pack | Standard weight in kg | Standard volume in m³ |
|---|---|---|---|---|
| For stainless steel housing | 11501 | 1 | 5.0 | 0.045 |
| For plastic housing | 11015 | 1 | 3.9 | 0.039 |

# Nozzle assemblies

## with rectangular front plate in white plastic and built-in hand grip

### DESCRIPTION

Made up of: Front plate, nozzle assembly, on-off and air regulation remote control.

| | Code | Standard Pack | Standard weight in kg | Standard volume in m³ |
|---|---|---|---|---|
| For plastic housing | 11013 | 1 | 4.2 | 0.039 |

# Front suction

## countercurrent unit hand grip

### DESCRIPTION

Handrail made of AISI-316 stainless steel for assembly with Basic NL nozzle set (code 65489).

| | Code | Standard Pack | Standard weight in kg | Standard volume in m³ |
|---|---|---|---|---|
| Hand grip | 65535 | 1 | - | - |

**For all products on this page**

Complies with Standard
**EN 13451-1-3**

Complies with Standards
**EN 16582-1**
**EN 16713-2**

# Rectangular hand grips

## in painted AISI-316L Stainless Steel

### DESCRIPTION

Specially designed for 11015 & 11501 nozzles. Nevertheless can be mounted on any of the other nozzle sets except for the 11013.

| Code | Standard Pack | Standard weight in kg | Standard volume in m³ |
|---|---|---|---|
| 09447 | 1 | 1.4 | 0.013 |

# Rectangular hand grips

## in polished AISI-316L Stainless Steel

### DESCRIPTION

Specially designed for 11015 and 11501 nozzles. Nevertheless can be mounted on any of the other nozzle sets except for the 11013.

| Code | Standard Pack | Standard weight in kg | Standard volume in m³ |
|---|---|---|---|
| 00246 | 1 | 1.48 | 0.01 |

# Round Hand grips

## in painted AISI-316L Stainless Steel

### DESCRIPTION

Specially designed for 11016 & 11500 nozzles. Nevertheless can be mounted on any of the other nozzle sets except for the 11013.

| Code | Standard Pack | Standard weight in kg | Standard volume in m³ |
|---|---|---|---|
| 07536 | 1 | 1.6 | 0.02 |

# Semicircular grab rail

## in polished AISI-316L Stainless Steel

### DESCRIPTION

AISI-316L polished stainless steel. Specially indicated for Marlin counter current swimming kit models; Marlin 30 II, Marlin 30 III and Marlin 45 III, although it may be mounted on any of the inlet sets, except for model 11013.

| Code | Standard Pack | Standard weight in kg | Standard volume in m³ |
|---|---|---|---|
| 37214 | 1 | 1.62 | 0.018 |

**For all products on this page**

Complies with Standard
EN 13451-1-3

Complies with Standards
EN 16582-1
EN 16713-2

# Stainless Steel Housing

## DESCRIPTION

In AISI-316L stainless steel. 240 mm in depth. Suitable for both, concrete and prefabricated pools. Supplied with sealing elements and 3 m cable conduit.

| Code | Standard Pack | Standard weight in kg | Standard volume in m³ |
|---|---|---|---|
| 00243 | 1 | 7.79 | 0.04 |

# Accessory for fitting

## in liner and fibreglass pools

## DESCRIPTION

In AISI-316L stainless steel, with seals and screws.

| Code | Standard Pack | Standard weight in kg | Standard volume in m³ |
|---|---|---|---|
| 00248 | 1 | 0.85 | 0.002 |

# Housing

## DESCRIPTION

Made in unalterable plastic. Supplied with sealing elements and two conduits of 3 m each.

| Code | Standard Pack | Standard weight in kg | Standard volume in m³ |
|---|---|---|---|
| 11502 | 1 | 5.0 | 0.036 |

# Accessory for fitting

## in liner and fibreglass pools

## DESCRIPTION

In plastic, with seals and screws.

| Code | Standard Pack | Standard weight in kg | Standard volume in m³ |
|---|---|---|---|
| 11503 | 1 | 0.6 | 0.003 |

# Massage hose

## DESCRIPTION

To be fitted on to the discharge nozzle. Length: 1.5 m.

| | Code | Standard Pack | Standard weight in kg | Standard volume in m³ |
|---|---|---|---|---|
| | 00247 | 1 | 1.22 | 0.01 |

# Control boxes

## DESCRIPTION

Electro-pneumatic box. Pumps are operated through the nozzle faceplate buttons.

| | Code | Standard Pack | Standard weight in kg | Standard volume in m³ |
|---|---|---|---|---|
| For 230 V II 1.5 kW (2 HP) pumps | 11507 | 1 | 1.2 | 0.004 |
| For 230 V II 2.2 kW (3 HP) pumps | 25456 | 1 | 1.2 | 0.004 |
| For 400 V III 2.2 kW (3 HP) pumps | 32151 | 1 | 1.2 | 0.004 |
| For 230/400 V III 2.6 kW (3.5 HP) pumps | 11506 | 1 | 1.2 | 0.004 |
| For 400 V III 4 kW (5.5 HP) pumps | 65536 | 1 | - | - |

# Nozzle assemblies

## with rectangular front plate in white plastic

## DESCRIPTION

Composed of: Faceplate, nozzle, On/OFF switch and air regulation knob. Components in AISI-316 Stainless Steel.

| | Code | Standard Pack | Standard weight in kg | Standard volume in m³ |
|---|---|---|---|---|
| Nozzle assemblies | 11508 | 1 | 7.0 | 0.065 |

Complies with Standard
EN 13451-1-3

Complies with Standards
EN 16582-1
EN 16713-2

# Grab rails

## DESCRIPTION

In AISI-316L Stainless Steel. (2 units).

| | Code | Standard Pack | Standard weight in kg | Standard volume in m³ |
|---|---|---|---|---|
| Grab rails | 05557 | 1 | 1.9 | 0.01 |

Complies with Standard
EN 13451-1-3

Complies with Standards
EN 16582-1
EN 16713-2

# Twin Housing

## DESCRIPTION

In AISI-316L stainless steel. 240 mm in depth. Suitable for both, concrete and prefabricated pools. Supplied with sealing elements and 3 m cable conduit.

| | Code | Standard Pack | Standard weight in kg | Standard volume in $m^3$ |
|---|---|---|---|---|
| Twin Housing | 05555 | 1 | 11.4 | 0.06 |

# Accessory for mounting

## in prefabricated and liner pools

## DESCRIPTION

In AISI-316L Stainless Steel. With gaskets and screws.

| | Code | Standard Pack | Standard weight in kg | Standard volume in $m^3$ |
|---|---|---|---|---|
| Accessory for mounting in prefabricated and liner pools | 05558 | 1 | 1.35 | 0.01 |

# Pumps

## DESCRIPTION

Made of plastic. Double insulation motor shaft. IP-54 motor protection.

| | Code | Standard Pack | Standard weight in kg | Standard volume in m³ |
|---|---|---|---|---|
| CCIH 200M | 11505 | 1 | 27 | 0.098 |
| CCIH 300M | 25415 | 1 | 29 | 0.098 |
| CCIH 350T | 11504 | 1 | 30.5 | 0.098 |

## PERFORMANCE

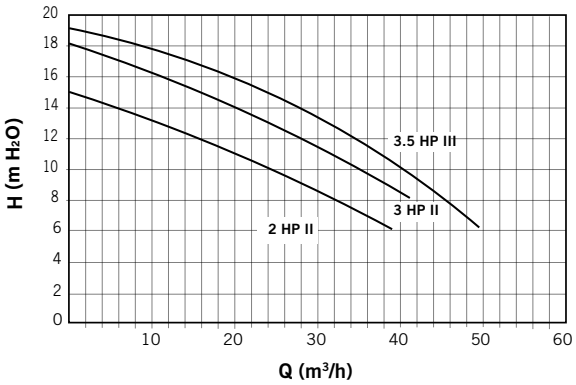


# CCIV vertical drive pumps

## DESCRIPTION

Specially designed for countercurrent equipment with high performance output with larger diameter of discharge and suction. It is important not to add any special features to the installation as they may limit the performance significantly. All the pumps metal components in contact with water are manufactured in AISI-316L Stainless Steel, highly resistant to corrosion.

| | Code | Standard Pack | Standard weight in kg | Standard volume in m³ |
|---|---|---|---|---|
| CCIV 200M | 28566 | 1 | 21.0 | 0.095 |
| CCIV 300M | 28568 | 1 | 22.6 | 0.095 |
| CCIV 300T | 30774 | 1 | 22.5 | 0.095 |
| CCIV 550T | 65549 | 1 | - | - |

## PERFORMANCE

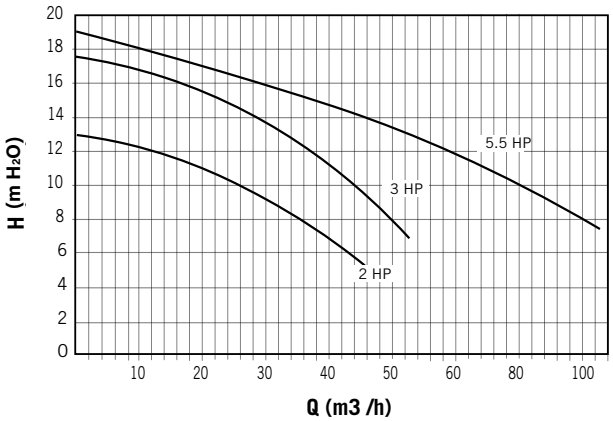

# Pumps

## DESCRIPTION

Made of plastic. Double insulation motor shaft. IP-54 motor protection

| | Code | Standard Pack | Standard weight in kg | Standard volume in m³ |
|---|---|---|---|---|
| CCIV 450T | 11509 | 1 | 32.5 | 0.098 |

## PERFORMANCE

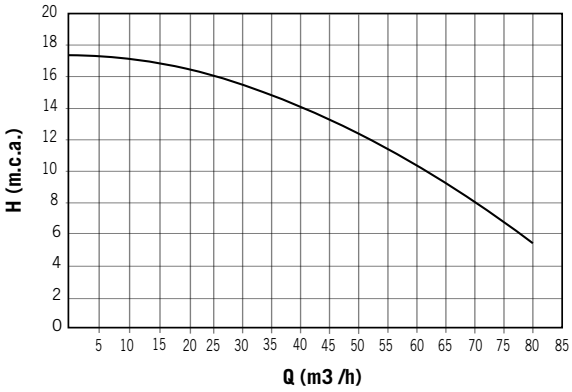


# Control boxes

## DESCRIPTION

Electro-pneumatic box. Pumps are operated through the nozzle faceplate buttons.

| | Code | Standard Pack | Standard weight in kg | Standard volume in m³ |
|---|---|---|---|---|
| For 400 V III 3.3 kW (4.5 HP) pumps | 11510 | 1 | 1.2 | 0.004 |

# PUMPS

## A COMPLETE RANGE TO SUIT EVERY NEED

### > VARIABLE SPEED, THE NEW ECO-SILENT STANDARD

The variable speed pump can operate for a longer daily duration at a lower speed, while offering **4 essential advantages:**

#### 1) SILENT OPERATION

Zodiac® variable-speed pumps emit up to 24 dB(A)* less than a single-speed pump, which is equivalent to the noise level in a library.

**Did you know?**

A reduction of 3 dB(A) represents a noise that is perceived to be twice as quiet to the human ear.

#### 2) ENERGY SAVINGS

Thanks to their TEFC** permanent magnet synchronous motors using ECM*** technology, Zodiac® variable-speed pumps help **reduce electric consumption by up to 90%**. So, in comparison with a single-speed pump, it pays for itself in just a few seasons.

#### 3) OPTIMISED WATER TREATMENT

Operating at a slower speed and with the flexibility to adapt to all pools, the speed at which the water passes through the filter is reduced and **filtration is greatly improved**. This also reduces the chances of the filter clogging.

**Did you know?**

The combined use of a variable-speed pump and a cartridge filter gives you an eco-friendly system that consumes less water (no backwash).

#### 4) CONNECTIVITY

With the new Fluidra Pool embedded connectivity or the iQPUMP Wi-Fi connecting device, it's now possible to **remotely manage Zodiac VS pumps thanks to the Fluidra Pool or iAquaLink apps**.

3 YEAR WARRANTY
LOW NOISE LEVEL
ENERGY SAVING
ECO FRIENDLY
LARGE CAPACITY
EASY MAINTENANCE
EASY RETROFIT
ENERGY EFFICIENT

Available on the App Store
Google play

* Compared to a standard filtration pump emitting at least 66 dB(A). Values expressed in A-weighted acoustic power level according to ISO standard 3741.
** TEFC = Totally-Enclosed Fan-Cooled
*** ECM = Electronically Commutated Motor (= electronically controlled "brushless" motor)

# DESIGNED TO ATTRACT YOUR CLIENTS

Our pumps range has been created based on the needs expressed by a panel of consumers*. So, this new range and its specific advantages will be sure to win your customers over.

## > STRONG GUARANTEES

**86%* of consumers are looking for reliable, long-lasting products**

- 3-year warranty all parts, including wear parts (pre-filter basket, joints, etc.).

3 YEAR
WARRANTY
ALL PARTS

## > EASY MAINTENANCE

**75% of consumers favour the ease of maintenance**

- All our pumps come fitted with a very large pre-filter basket (2.6 L) for easy maintenance, meaning you can wait longer between cleyears.

LARGE CAPACITY
UP TO 117% LARGER

## > ENERGY SAVINGS

**66% of consumers want to take control of their energy consumption**

- Our variable-speed pumps are incomparably energy-efficient.
- Our single-speed pumps are high-performance, which means you can use less powerful models (depending on the instalation).

ECO FRIENDLY

*"Use and Attitudes" consumer survey conducted in France in 2015 on a representative sample of 779 people.

# EASY TO INSTALL

Our filtration range has been well thought-out to make your everyday life easier: **simple, quick to install and easy to maintain.**

## > PUMPS THAT ARE EASY TO INSTALL, EVEN WHEN REPLACING

All Zodiac® filtration pumps are available from a unique platform that guarantees the same installation, replacement and maintenance advantages, for all models in our filtration range.

**Strengths:**

1. Suction and discharge with **double thread** (external and 2" internal),
2. Exclusive 63/50 mm **union connectors**,
3. **Bases to elevate the pump** (included with FloPro™ VS, optional for other models)

- **Easy Retrofit:** Pumps can be installed without changing the piping and can be **easily fitted into the majority of existing installations, thanks to the bases.**
- Easy Retrofit system is valuable for both single speed and variable speed versions of a same pump model.
- Replacement compatibility based on data published by manufacturers. A tolerance of +/- 10 mm is acceptable if [intake pipe length] = 4x[pipe diameter], according to applicable hydraulics standards.

Pump models written in purple are Easy Retrofit compatible for both inlet and outlet.
Pump models written in blue are Easy Retrofit compatible for inlet only (slight outlet pipe modification needed).

**UPDATED LIST**

| Pump to replace | Retrofit solution |
|---|---|
| **Calpeda®** : MPC 11, 21, 31 & 41 (without base)<br>**Hayward®** : TriStar, SuperPump, Max-Flo XL, Max-Flo, SuperPool, SuPerPool II, Super II, RS II<br>**Kripsol®** : Koral-KSE / KSV, Caribe-CK, Ondina-OK, Epsilon-EP, Prime-KPR / KPRV, KS Evo, KSX Pro<br>**KSB®** : Filtra N<br>**Pentair®** : SuperFlo<br>**Procopi®** : Eurostar II, Eurostar Eco Touch Pro<br>**PSH®** : Mini.3, Lia S, ND.1, ND.2<br>**Saci®** : Optima<br>**Speck** : BADU Bettar / TOP / Magna, BADU Gamma, BADU Eco Touch-Pro / Eco Soft, BADU90, BADU Prime / Prime Eco VS<br>**StaRite®** : SuperMax, S5P1R<br>**Waterco®** : Aquamite, Supatuf | **A**<br>Without base |
| **Aqua Technix®** : Aqua Master<br>**DAB®** : Swim, Euroswim & Europro 50, 75 & 100, E-Swim<br>**Espa®** : Silen Plus 1M, Silen Plus 2M / 3M, Silen S, Silen S2, Silver<br>**Majestic®** : Master<br>**Saci®** : Winner, [e]Winner<br>**Speck®** : BADU Profi<br>**Waterco®** : Supasteam | **B**<br>A + thin base |
| **AstralPool®** : Europa<br>**Davey®** : Silensor SLS, Silensor SLL, SilensorPro VSD200, SilensorPro VSD400<br>**Pentair®** : UltraFlow, UltraFlow Plus, Max-E-ProXF, 5PXF<br>**Speck®** : BADU EasyFit<br>**Starite®** : Ultra-Glas, S5P3R | **C**<br>A + thin base + spacing |
| **AstralPool®** : Victoria Plus, Victoria Plus Silent, Glass Plus, Discovery, Niagara<br>**Calpeda®** : MPC 11, 21, 31 & 41 (avec son socle)<br>**Pentair®** : Challenger, WhisperFlo<br>**StaRite®** : WhisperPro, S5P5R | **D**<br>A + thick base |
| **StaRite®** : 5P2R, S5P2R, 5P6R, SW5P6R, Max-E-Pro<br>**Waterco®** : Lacronite, Lacronite ECO-V | **E**<br>A + thick + thin base |

# PUMPS

## > SINGLE-SPEED PUMPS, LONG-LASTING AND EFFICIENT FOR ALL POOLS

FloPro™ pumps are designed with corrosion-resistant materials. The body of the pump is made of very thick polypropylene, **which makes it long-lasting and silent.**

Equipped with highly energy-efficient asynchronous motors, the range is available in 9 models (from 0.5 to 2.0 HP, available in mono- or tri-phase, except for the 0.5 HP model) **to meet the needs of most pools.**

**The FloPro™ platform is compatible with most equivalent pumps on the market** with no restrictions and no need to alter piping, thanks to the "Easy Retrofit" system.

3 YEAR WARRANTY

ALL TYPES OF POOLS

LARGE CAPACITY

EASY MAINTENANCE

EASY RETROFIT

### STANDARD INSTALLATION

1. Pump
2. Filter
3. Heating system
4. Water treatment system

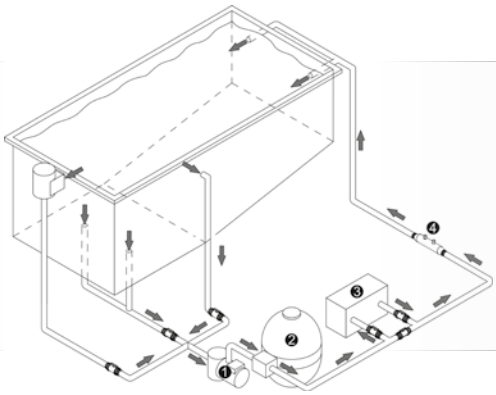

## COMPARATIVE TABLE OF THE RANGE

| | FloPro™ VS | FloPro™ VS AUT | E30iQ | FloPro™ |
|---|---|---|---|---|
| | Variable-speed pump, for maximum energy efficiency | | Variable-speed pump, simple and energy-efficient | Single-speed pumps, long-lasting and efficient for all pools |
| Warranty | 3 years | 3 years | 3 years | 3 years |
| "Easy retrofit" installation | • | • | • | • |
| Pump bases for Easy Retrofit | • | • | Option | Option |
| High capacity pre-filter | • | • | • | • |
| Number of speeds | 8 | 10 | 3 | 1 |
| Pump speed | 600-3450 RPM | | 40 - 100 % | 2850 RPM |
| Number of models | 1 | 1 | 2 | 9 |
| Power (P2) | 1.65 HP | | 1 and 2 HP | 0.5 to 2 HP |
| Max. pool volume | 100 $m^3$ | | 120 $m^3$ | 150 $m^3$ |
| Optimum efficiency | 30-80 $m^3$ | | 20-100 $m^3$ | N/A |
| Removable user interface | • | | | N/A |
| Dry contacts control | • | | • | N/A |
| App control | iAquaLink (with optional IQPUMP) | | Fluidra Pool | |

VARIABLE SPEED PUMPS

# FloPro™ VS

- + Guaranteed energy savings and silence
- + Smart operation
- + Remote control

PROFESSIONAL ADVICE RECOMMENDED

3 YEAR WARRANTY · ALL TYPES OF POOLS · ENERGY SAVING · EASY RETROFIT · LOW NOISE LEVEL · ECO-FRIENDLY · MagnaPool ECOSYSTEM · iAquaLink COMPATIBLE · ENERGY EFFICIENT

## ACCESSORIES INCLUDED IN THE PACK

| | | | |
|---|---|---|---|
| Wall mounting kit (standard FloPro™ VS only) | Thin pump base | Large pump base | 63/50mm union tailpieces |

## ASSOCIATED PRODUCTS

| CS Cartridge Filter | iQPUMP | MS Filter |
|---|---|---|
| WF000024/25 | WA000017 | WF000094/95/96/97 & 98 |

## PRODUCT REFERENCES

| Model | FloPro™ VS | FloPro™ VS AUT |
|---|---|---|
| Standard Model | WP000003 | WP000079 |

## DESCRIPTION

| Model | FloPro™ VS | FloPro™ VS AUT |
|---|---|---|
| User interface | 1-line LCD screen (blue) | / |
| Languages | 6 (FR-EN-ES-DE-IT-NL) | |
| Operating mode(s) | Autonomous, connected to eXO iQ salt water chlorinator or by dry contacts | Connected to iQPUMP or to eXO iQ salt water chlorinator |
| Clock / Timer | 24h clock, timers (speeds 1 & 2), timeout mode (speeds 3 & 4) | Via iAquaLink™ app (up to 10 timers) |
| Number of speeds | 8 programmable and assignable speeds (+/- 10 RPM) | 10 programmable speeds via iAquaLink™ app |
| Priming | Automatic at startup, adjustable priming speed and duration | |
| Safety features | Electronic freeze protection<br>Automatic shut down in case of high or low tension | |
| Filter basket volume | 2.6 L | |
| Compatible pipework | DN50 mm & DN63 mm (2" inlet & outlet threaded ports, 63/50mm union tailpieces provided) | |
| Use | Fresh water and salt water up to 6 g/L (6000 ppm) | |

## TECHNICAL SPECIFICATIONS

| Model | FloPro™ VS | FloPro™ VS AUT |
|---|---|---|
| Pump type | Self-priming water pump | |
| Motor type | Synchronous motor (ECM* technology), TEFC**, class F insulation | |
| Efficiency | > 80 % (as per IE3 standard) | |
| Output power HP (P2) | 1,65 | |
| Output power Kw (P2) | 1,23 | |
| Flow rate at 10m head ($m^3$/h) | 24.1 $m^3$/h (at 3450 RPM) | |
| Maximum flow rate ($m^3$/h) | 30.7 $m^3$/h | |
| Maximum manometric Head (m) | 21.5 m | |
| Maximum water temperature | 35 °C | |
| Speeds | 600 - 3450 RPM (adjustable by 10 RPM increments) | |
| Protection rating | IPX4 | |
| Power supply | 220-240 VAC - 50/60 Hz | |
| Connections for external controls | RS485 for connection to automation Zodiac or iQPUMP, dry contact for external activation (speeds 1 to 4) | RS485 for connection to Zodiac automation or iQPUMP |

*: ECM = Electronically Commutated Motor
**: Totally-Enclosed Fan-Cooled

## 1 RANGE, 3 SOLUTIONS

| I WANT A CONNECTED POOL | | I WANT A CONNECTED PUMP | | I WANT A PUMP ONLY |
|---|---|---|---|---|
| | | | | |
| Pump model | Remote control | Pump model | Remote control | |
| **FloPro™ VS AUT** | **eXO® iQ Range Hydroxinator® iQ** | **FloPro™ VS AUT** | **iQPUMP** | **FloPro™ VS** |
| WP000079 | | WP000079 | WA000017 | WP000003 |

## PERFORMANCE

- Performance curves shown for example speeds (each speed has a unique curve).
- Manometric pressure is expressed as "pump head" in meters of water:
  1 bar = 10.19 m.

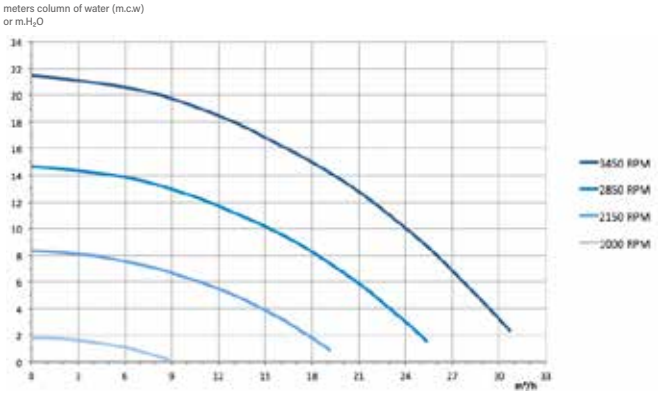


## DIMENSIONS AND WEIGHT

| Model | FloPro™ VS | FloPro™ VS AUT |
|---|---|---|
| Length | 59.8 cm | |
| Height | 32.4 cm (without pump base) | |
| Width | 25.4 cm | |
| Weight | 17 kg | |

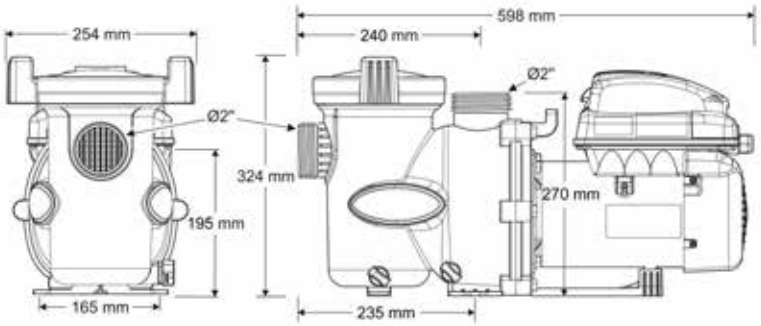

VARIABLE SPEED PUMPS

# E30iQ

+ Guaranteed energy saving
+ Silent
+ Full control anywhere, anytime

3 YEAR WARRANTY
ALL TYPES OF POOLS
ENERGY SAVING
EASY RETROFIT
ECO-FRIENDLY
LOW NOISE LEVEL
Energy Efficient
FLUIDRA POOL

## ACCESSORIES INCLUDED IN THE PACK

63/50mm union tailpieces

| OPTIONAL ACCESSORIES | | ASSOCIATED PRODUCTS | |
|---|---|---|---|
| Thin pump base | Large pump base | CS Cartridge Filter | MS Filter |
| R0486701 | R0546401 | WF000024/25 | WF000094/95/96/97 & 98 |

## PRODUCT REFERENCES

| Model | E30iQ 100 | E30iQ 200 |
|---|---|---|
| Standard Model | WP000221 | WP000222 |

## DESCRIPTION

| Model | E30iQ 100 | E30iQ 200 |
|---|---|---|
| User interface | 1-line LCD screen (white ) | |
| Operating mode(s) | Autonomous, connected to Fluidra Pool or extrenal control by dry contacts | |
| Clock / Timer | 24h clock, 6 timers | |
| Number of speeds | 3 programmable speeds. Factory settings: ECO (50%), CLEAN (75%) & BOOST (100%) | |
| Priming | Adjustable priming speed and duration | |
| Safety features | Automatic shut down in case of high amperage or overheat | |
| Filter basket volume | 2.6 L | |
| Compatible pipework | DN50 mm & DN63 mm (2" inlet & outlet threaded ports, 63/50mm union tailpieces provided) | |
| Use | Fresh water and salt water up to 6 g/L (6000 ppm) | |
| App control | Fluidra Pool | |

## TECHNICAL SPECIFICATIONS

| Model | E30iQ 100 | E30iQ 200 |
|---|---|---|
| Pump type | Self-priming water pump | |
| Motor type | Synchronous motor (ECM* technology), TEFC**, class F insulation | |
| Efficiency | > 80 % (as per IE3 standard) | |
| Output power HP (P2) | 1 | 2 |
| Output power Kw (P2) | 0,75 | 1,5 |
| Flow rate at 10m head ($m^3$/h) | 15.5$m^3$/h (at 100%) | 25.1$m^3$/h (at 100%) |
| Maximum flow rate ($m^3$/h) | 23 $m^3$/h | 34 $m^3$/h |
| Maximum manometric Head (m) | 18m | 20.5m |
| Maximum water temperature | 35 °C | |
| Speeds | 40 - 100 % (adjustable by 1% increments) | |
| Protection rating | IPX5 | |
| Power supply | 230 VAC - 50/60 Hz | |

*: ECM = Electronically Commutated Motor
**: Totally-Enclosed Fan-Cooled

## PERFORMANCE

- Performance curves shown for example speeds (each speed has a unique curve).
- Manometric pressure is expressed as "pump head" in meters of water:
  1 bar = 10.19 m.

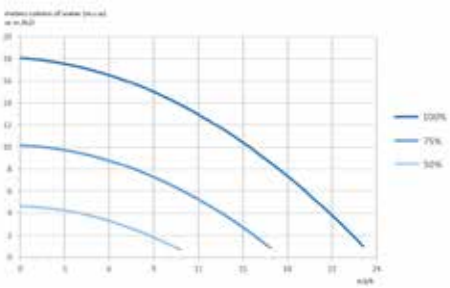

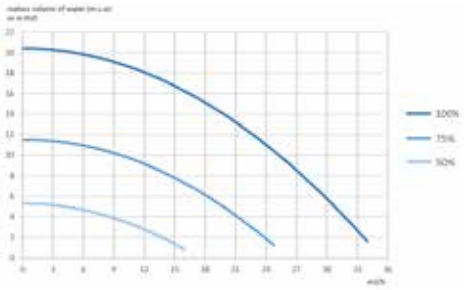

## DIMENSIONS AND WEIGHT

| Model | E30iQ 100 | E30iQ 200 |
|---|---|---|
| Length | 59 cm | |
| Height | 32.4 cm (without pump base) | |
| Width | 25.4 cm | |
| Weight | 15 Kg | 18 Kg |

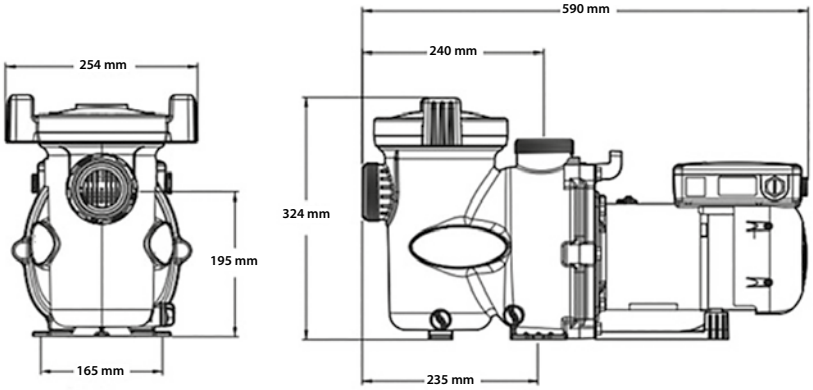


## INSTALLATION

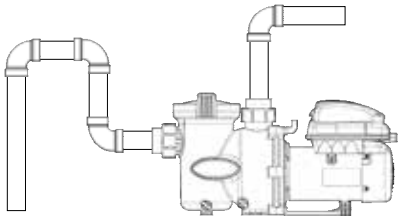

Incorrect: Air retention and risk of incorrect pre-filter filling.

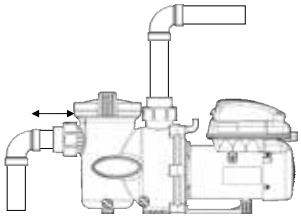

Incorrect: Suction pipe too short, risk of cavitation.

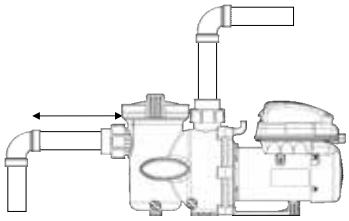

Correct: Length of suction pipe = 4 x pipe diameter (20 cm for 50 mm and 25 cm for 63 mm).

SINGLE SPEED PUMPS

# FloPro™

+ Built to last
+ High efficiency
+ Silent

3 YEAR WARRANTY

PROFESSIONAL ADVICE RECOMMENDED

ALL TYPES OF POOLS

EASY RETROFIT

## ACCESSORIES INCLUDED IN THE PACK

63/50mm union tailpieces

| OPTIONAL ACCESSORIES | | ASSOCIATED PRODUCTS | |
|---|---|---|---|
| Thin pump base | Large pump base | CS Cartridge Filter | MS Filter |
| R0486701 | R0546401 | WF000024/25 | WF000094/95/96/97 & 98 |

## PRODUCT REFERENCES

| FloPro™ | 50M | 75M | 75T | 100M | 100T | 150M | 150T | 200M | 200T |
|---|---|---|---|---|---|---|---|---|---|
| Standard Model | WP000147 | WP000148 | WP000149 | WP000150 | WP000151 | WP000152 | WP000153 | WP000154 | WP000155 |

## DESCRIPTION

| FloPro™ | 50M | 75M | 75T | 100M | 100T | 150M | 150T | 200M | 200T |
|---|---|---|---|---|---|---|---|---|---|
| Operating mode(s) | Controlled by the filtration timer | | | | | | | | |
| Nominal speed | 2850 RPM | | | | | | | | |
| Safety features | Automatic shut down in case of high amperage / overheat situation | | | | | | | | |
| Filter basket volume | 2.6 L | | | | | | | | |
| Compatible pipework | DN50 mm & DN63 mm (2" inlet & outlet threaded ports, 63/50mm union tailpieces provided) | | | | | | | | |
| Use | Fresh water and salt water up to 6 g/L (6000 ppm) | | | | | | | | |

## TECHNICAL SPECIFICATIONS

| FloPro™ | 50M | 75M | 75T | 100M | 100T | 150M | 150T | 200M | 200T |
|---|---|---|---|---|---|---|---|---|---|
| Pump type | Self-priming water pump | | | | | | | | |
| Motor type | Asynchronous motor, TEFC*, class F insulation | | | | | | | | |
| Efficiency | > 80 % (as per IE3 standard) | | | | | | | | |
| Output power HP (P2) | 0.5 | 0.75 | | 1 | | 1.5 | | 2 | |
| Output power Kw (P2) | 0.37 | 0.55 | | 0.75 | | 1 | | 1.5 | |
| Max amperage (A) | 3.5 | | 1.2 | 4.2 | 1.6 | 6 | 3.2 | 7.6 | 3.5 |
| Power supply 50 HZ | Single phase | | 3-phase | Single phase | 3-phase | Single phase | 3-phase | Single phase | 3-phase |
| Flow rate at 10m head ($m^3/h$) | 10.3 $m^3/h$ | 13.2 $m^3/h$ | | 15.8 $m^3/h$ | | 20.8 $m^3/h$ | | 27 $m^3/h$ | |
| Maximum flow rate ($m^3/h$) | 16.8 $m^3/h$ | 18.6 $m^3/h$ | | 22.9 $m^3/h$ | | 27.4 $m^3/h$ | | 35.5$m^3/h$ | |
| Maximum manometric Head (m) | 17.8 m | 20.7 m | | 21.5 m | | 22.3 m | | 24.5 m | |
| Maximum water temperature | 35 °C | | | | | | | | |
| Protection rating | IPX5 | | | | | | | | |

* TEFC = Totally Enclosed Fan Cooled

## PERFORMANCE

- Performance curves for FloPro™ single speed pump range.
- Manometric pressure is expressed as "pump head" in meters of water: 1 bar = 10.19 m.

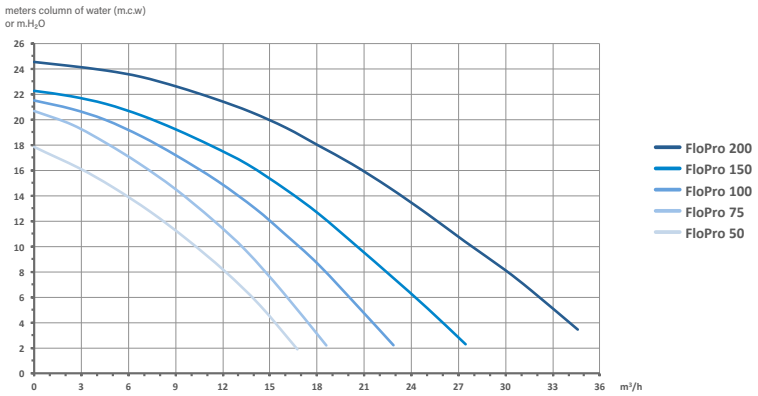


## DIMENSIONS AND WEIGHT

| FloPro™ | 50M | 75M | 75T | 100M | 100T | 150M | 150T | 200M | 200T |
|---|---|---|---|---|---|---|---|---|---|
| Length (A) | 58.3 cm | | 54.3 cm | 58.3 cm | 55.3 cm | 58.3 cm | 56.8 cm | 58.3 cm | |
| Height | 32.4 cm (without pump base) | | | | | | | | |
| Width | 25.4 cm | | | | | | | | |
| Weight | 16 kg | 17 kg | | | 18 kg | 19 kg | 20 kg | 21 kg | |

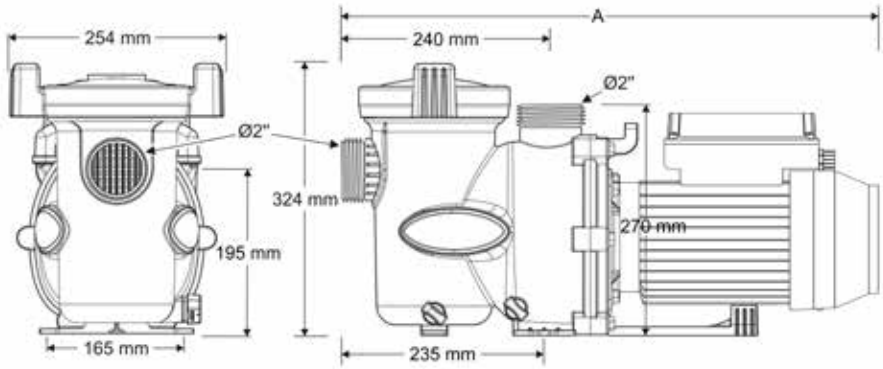


## INSTALLATION

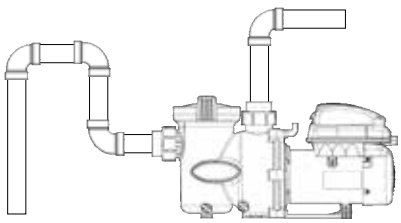

Incorrect : Air retention and risk of incorrect pre-filter filling.

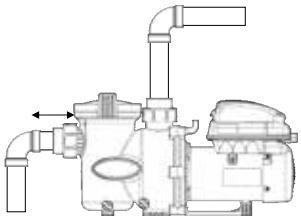

Incorrect : Suction pipe too short, risk of cavitation.

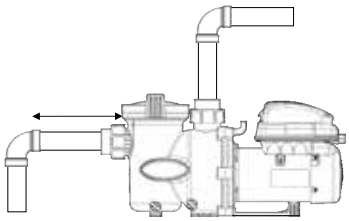

Correct : Length of suction pipe = 4 x pipe diameter (20cm for 50mm and 25cm for 63mm)

PUMPS ACCESSORIES

# iQPUMP

+ Remote control anywhere, anytime
+ Easy configuration
+ Maximized energy efficiency

3 YEAR WARRANTY

PROFESSIONAL ADVICE RECOMMENDED

EASY INTALLATION

ECO-FRIENDLY

iAquaLink® CONTROL

## ACCESSORIES INCLUDED IN THE PACK

Wall mounting kit

## PRODUCT REFERENCES

| Model | iQPUMP |
|---|---|
| Standard Model | WA000017 |

## DESCRIPTION

| Model | iQPUMP |
|---|---|
| User interface | Quick control interface via buttons and Leds |
| Mobile user interfaces | Free iAquaLink™ app for Android™ and Apple® smartphones and tablets |
| Operating mode(s) | Wi-Fi connection for remote access and control using iAquaLink(tm) app<br>User interface onto Wi-Fi device for initial setup and on-site manual control. |
| Compatible with | FloPro™ VS AUT (dedicated model)<br>FloPro™ VS pump (all manufacturing years are compatible) |

## TECHNICAL SPECIFICATIONS

| Model | iQPUMP |
|---|---|
| Protection rating | IPX4 |
| Power supply | Connected to the pump FloPro™ VS (RS485 cable provided) |
| Wi-Fi connectivity | Wi-Fi 802.11b/g/n/ac * |
| Wi-Fi range | Up to 150 m ** |
| Length of RS485 cable | 4.3 m |
| Dimensions ( l x h x w) | 13.7 x 31.0 x 3.2 cm |

*: ECM = Electronically Commutated Motor
**: Totally-Enclosed Fan-Cooled

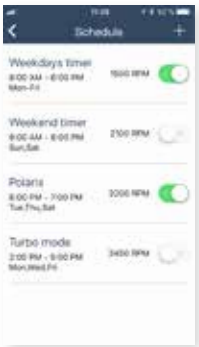

ZODIAC®

# CONNECTED AND EFFICIENT GENERATION OF VARIABLE SPEED PUMPS

PUMPS

VARIABLE SPEED PUMPS

# VSP 150C

## DESCRIPTION

- Self-priming range of pumps for residential swimming pools
- Variable speed technology with embedded inverter and user interface
- Including a 1,4 liters prefilter and D63mm couplings
- Suitable for swimming pools using electrolysis treatment
- It includes a dry contacts kit with 2,5m cable to be externally controlled

## PRODUCT REFERENCES

| Model VSP | 150C |
|---|---|
| Product reference | 75948 |

## WEIGHT AND DIMENSIONS

| Model VSP | 150C |
|---|---|
| Product reference | 75948 |
| Standard weight in Kg | 18.1 |
| Standard volume in $m^3$ | 0.053 |

## TECHNICAL FEATURES

| Model VSP | | | 150C |
|---|---|---|---|
| Product reference | | | 75948 |
| Voltage | $U_N$ | V | 220-240 VAC |
| Flow at $H_N$ | $Q_N$ | $m^3/h$ | 19.3 |
| Nominal head | $H_N$ | m | 10 |
| Maximum head | $H_{max}$ | m | 14.2 |
| Maximum flow | $Q_{max}$ | $m^3/h$ | 30.5 |
| Motor rated output | $P_{2N}$ | kW | 0.75 |
| Maximum absorved power | $P_{1max}$ | kW | 1.05 |
| Pipe size | D | mm | D63 |

Features at full speed: 100%
Maximum flow at Head of 4 m.cw.

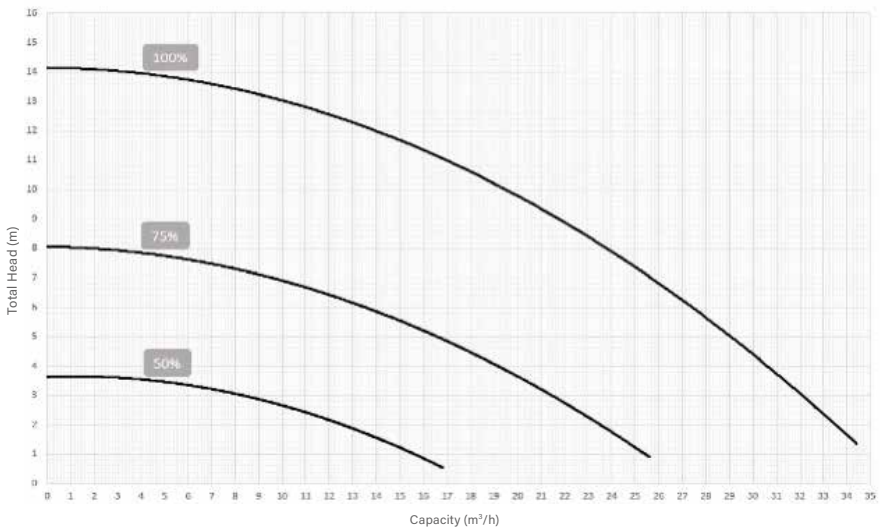

SINGLE SPEED PUMPS

# SSP 75-100-150

## DESCRIPTION

- Self-priming range of pumps for residential swimming pools
- Including a 1,6 liters prefilter and D50mm couplings
- Single-phase motors, IP-X5 protection and insulation class F
- Range of flows from 12,5 to 19,5 m³/h at 10 m.c.w.

## PRODUCT REFERENCES

| Model SSP | 75M | 100M | 150M |
|---|---|---|---|
| Product reference | 75939 | 75940 | 75941 |

## WEIGHT AND DIMENSIONS

| Model SSP | 75M | 100M | 150M |
|---|---|---|---|
| Product reference | 75939 | 75940 | 75941 |
| Standard weight in Kg | 9.3 | 10.4 | 11.8 |
| Standard volume in m³ | 0.054 | | 0.056 |

## TECHNICAL FEATURES

| Model SSP | | | 75M | 100M | 150M |
|---|---|---|---|---|---|
| Product reference | | | 75939 | 75940 | 75941 |
| Voltage | $U_N$ | V | 230 | | |
| Flow at $H_N$ | $Q_N$ | m³/h | 12.5 | 16 | 19.5 |
| Nominal head | $H_N$ | m | 10 | | |
| Maximum head | $H_{max}$ | m | 14.7 | 17.1 | 17.3 |
| Maximum flow | $Q_{max}$ | m³/h | 18.5 | 21.7 | 26.3 |
| Motor rated output | $P_{2N}$ | kW | 0.55 | 0.75 | 1.10 |
| Maximum absorved power | $P_{1max}$ | kW | 0.9 | 1.2 | 1.4 |
| Pipe size | D | mm | D50 | | |

Maximum flow at Head of 4 m.cw.

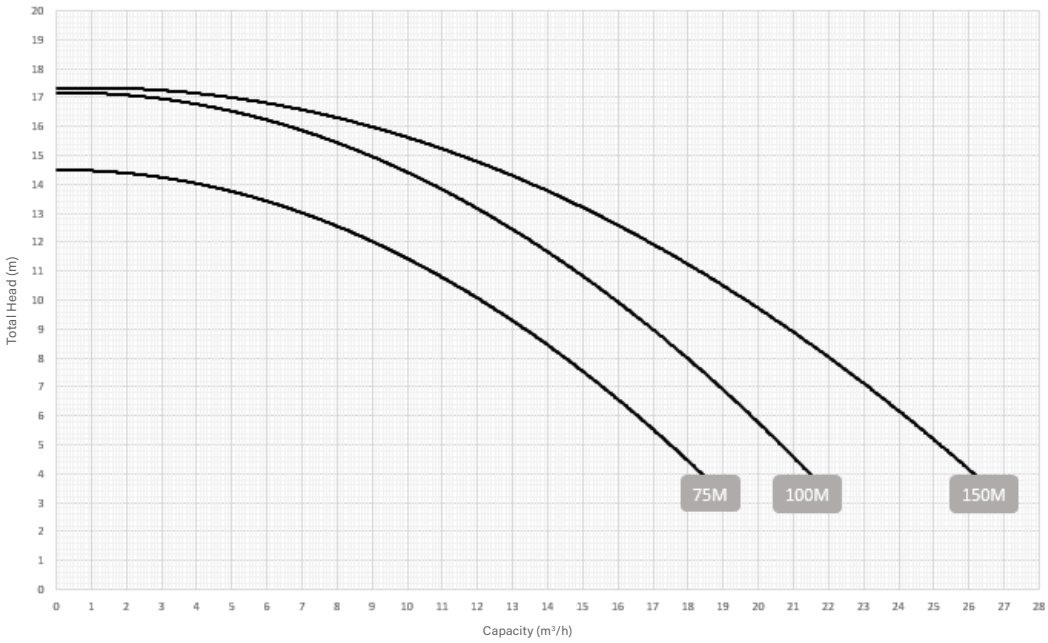

SINGLE SPEED PUMPS

# SSP 200-300

## DESCRIPTION

- Self-priming range of pumps for residential swimming pools
- Including a 2.8 liters prefilter and D63mm couplings
- Single-phase motors, IP-X5 protection and insulation class F
- Range of flows from 28.5 to 35.7 m³/h at 10 m.c.w.

## PRODUCT REFERENCES

| Model SSP | 200M | 300M |
|---|---|---|
| Product reference | 75942 | 75943 |

## WEIGHT AND DIMENSIONS

| Model SSP | 200M | 300M |
|---|---|---|
| Product reference | 75942 | 75943 |
| Standard weight in Kg | 18.3 | 19.0 |
| Standard volume in m³ | 0.08 | |

## TECHNICAL FEATURES

| Model SSP | | | 200M | 300M |
|---|---|---|---|---|
| Product reference | | | 75942 | 75943 |
| Voltage | $U_N$ | V | 230 | |
| Flow at $H_N$ | $Q_N$ | m³/h | 28.5 | 35.7 |
| Nominal head | $H_N$ | m | 10 | |
| Maximum head | $H_{max}$ | m | 19.2 | 22.7 |
| Maximum flow | $Q_{max}$ | m³/h | 35 | 43 |
| Motor rated output | $P_{2N}$ | kW | 1.5 | 2.2 |
| Maximum absorved power | $P_{1max}$ | kW | 2.2 | 2.8 |
| Pipe size | D | mm | D63 | D63 |

Maximum flow at Head of 4 m.cw.

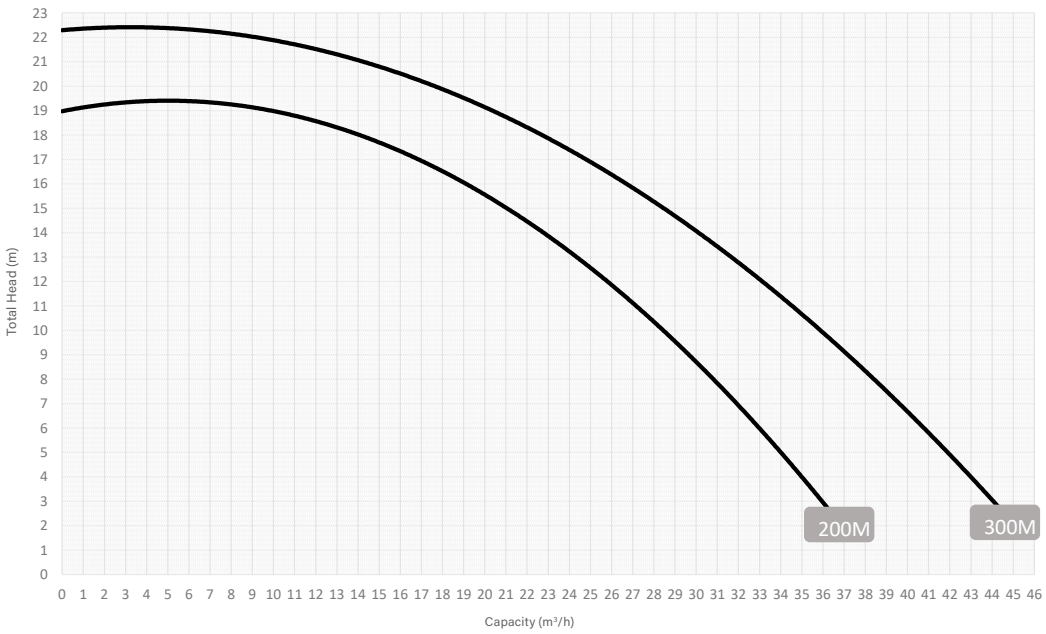

PUMPS ACCESSORIES

# INVERTER CONTROLLER

Easy to use User Interface

## DESCRIPTION

Frequency inverter to transform a single speed pump into a variable speed pump and take advantage of its benefits. It allows to modify the motor frequency and therefore the pump´s flow. To be installed either in new installations or upgrading existing ones.

- Energy savings, up to 80%.
- Longer lifespan for the pump due to the motor´s speed reduction.
- Silent operation at lower speeds.
- Better filtration quality at lower speeds.
- Timer functionalities included in the user interface.

## PRODUCT REFERENCES

| Model | 1.1M |
|---|---|
| Product reference | 75947 |

## WEIGHT AND DIMENSIONS

| Model | 1.1M |
|---|---|
| Product reference | 75947 |
| Standard weight in Kg | 3.3 |
| Standard volume in $m^3$ | 0.005 |

## TECHNICAL FEATURES

| Model VSP | 1.1M |
|---|---|
| Input Voltage | 230 V |
| Input Power Supply | 1~ AC |
| Input Frequency | 50 Hz |
| Output Power Supply | 1~ AC |
| Output Max. Power | 1,1 kW |
| Speed Range | 1.200 - 2.900 rpm |

# WATER TREATMENT AND WATER ANALYSIS PRODUCTS

ctx pro


292 Pool chemicals regulators
295 Pool chemicals disinfectants
304 Pool chemicals algicides
307 Pool chemicals flocculants
310 Pool chemicals cleaners
315 Pool chemical kits
316 Pool chemicals winterising products
318 Spa chemicals
321 Water analysis - Water testers


ASTRALPOOL


326 Pool chemicals regulators
327 Pool chemicals disinfectants
329 Pool chemicals algicides
332 Pool chemicals flocculants
333 Pool chemicals cleaners
337 Pool chemical kits
337 Pool chemicals winterising products
339 Spa chemicals
342 Water analysis - Water testers


## Other brands


344 Water analysis - Water testers
351 Water analysis - Test kits and photometers
352 Smart pool assistants
353 Smart pool assistant accessories

# We know, we take care, we live the water.

Our formula is unique: care, technology, knowledge.
**Now with a new design, clearer and more functional.**

## New design

Reference

Name of the product

Benefits and advantages of the product

Family & type of product

Format of the product

Usage guide

## Everything you need for a healthy and perfect water in 4 steps:

### 1 Balance

Maintains water parameters at optimal levels.

### 2 Disinfection

Disinfects water and kills microorganisms.

### 3 Algicide

Prevents algae, preventing their appearance.

### 4 Crystal Water

Removes dirt and cloudiness, crystal clear water.

Take care of the elements of your pool for a perfect efficacy.

### Cleaning products

Take care of your pool during Winter.

### Winter products

And if any type of problem arises, or you need extra care, a complete range of **CTX Solutions.**

ctx® pro

**The caring formula**

ctxprofessional.com

ctx pro

# SPA sensations

## The performance of CTX products now available for your spa

ctx pro | The caring formula

Find them in the Spa Chemical Section - pages 318, 319, 320.

ctx® pro

## NEW!

A profesional range to measure water parameters

# CTX pro Test Strips

Dip and test the levels of:

### 7 in 1

- Free chlorine
- Total chlorine
- Total bromine
- pH
- Total alkalinity
- Total hardness
- Cyanuric acid

### 6 in 1

- Free chlorine
- Bromine
- pH
- Total alkalinity
- Total hardness
- Cyanuric acid

### Test for salt

### Chlorine 4 in 1

- Free chlorine
- pH
- Total alkalinity
- Cyanuric acid

### Total bromine 4 in 1

- Total bromine
- pH
- Total alkalinity
- Total hardness

### MPS 3 in 1

- Monopersulfate (MPS)
- pH
- Total alkalinity

Find them in the water treatment section on pages 321-322.

POOL CHEMICALS REGULATORS

# CTX 10 pH Minus

## DESCRIPTION

Reduces pH values over 7.6.

- Enhances bathing comfort, preventing irritation of the eyes and mucous membranes and destruction of the skin's natural protective layer.
- Optimizes disinfectant efficacy.
- Prevents limescale.

| GRANULATED | EFFICACY | ALL TYPES OF POOLS | DOSAGE |
|---|---|---|---|
| | IMMEDIATE | | 150g / -0,2pH / 10m³ |

| | Format | Code | Standard Pack | Pallet weight Kg | Standard volume in m³ |
|---|---|---|---|---|---|
| CTX 10 pH Minus | 1.5 kg | 03105 | 18 | 600 | - |
| CTX 10 pH Minus | 5 kg | 74650 | 4 | 720 | - |

# CTX 15 pH Minus

## DESCRIPTION

Reduces pH values over 7.6.

- Enhances bathing comfort, preventing irritation of the eyes and mucous membranes and destruction of the skin's natural protective layer.
- Optimizes disinfectant efficacy.
- Prevents limescale.
- Ideal for pump dosing.

| LIQUID | EFFICACY | ALL TYPES OF POOLS | DOSAGE |
|---|---|---|---|
| | IMMEDIATE | | 120ml / -0,2pH / 10m³ |

| | Format | Code | Standard Pack | Pallet weight Kg | Standard volume in m³ |
|---|---|---|---|---|---|
| CTX 15C pH Minus | 10 l | 28399 | 1 | 600 | - |
| CTX 15C pH Minus | 20 l | 17181 | 1 | 480 | - |
| Professional use only | | | | | |

| LIQUID | EFFICACY | ALL TYPES OF POOLS | DOSAGE |
|---|---|---|---|
| | IMMEDIATE | | 325ml / -0,2pH / 10m³ |

| | Format | Code | Standard Pack | Pallet weight Kg | Standard volume in m³ |
|---|---|---|---|---|---|
| CTX 15 pH Minus | 10 l | 73669 | 1 | 600 | - |
| CTX 15 pH Minus | 20 l | 73670 | 1 | 480 | - |

# CTX 20 pH Plus

## DESCRIPTION

Increases pH values under 7.2.

- Enhances bathing comfort, preventing irritation of the eyes and mucous membranes, and destruction of the skin's natural protective layer.
- Optimizes disinfectant efficacy.
- Prevents metal corrosion.

| GRANULATED | EFFICACY | ALL TYPES OF POOLS | DOSAGE |
|---|---|---|---|
| | IMMEDIATE | | 150g / +0,2pH / 10m³ |

| | Format | Code | Standard Pack | Pallet weight Kg | Standard volume in m³ |
|---|---|---|---|---|---|
| CTX 20 pH Plus | 1 kg | 16723 | 18 | 400 | - |
| CTX 20 pH Plus | 5 kg | 74895 | 4 | 720 | - |

# CTX 25 pH Plus

## DESCRIPTION

Increases pH values under 7.2.

- Enhances bathing comfort, preventing irritation of the eyes and mucous membranes, and destruction of the skin's natural protective layer.
- Optimizes disinfectant efficacy.
- Prevents metal corrosion.
- Ideal for pump dosing.

| LIQUID | EFFICACY | ALL TYPES OF POOLS | DOSAGE |
|---|---|---|---|
| | IMMEDIATE | | 350ml / +0,2pH / 10m³ |

| | Format | Code | Standard Pack | Pallet weight Kg | Standard volume in m³ |
|---|---|---|---|---|---|
| CTX 25 pH Plus | 20 l | 17182 | 1 | 480 | - |

# CTX 21 Alka Plus

## DESCRIPTION

Alkalinity has an important role as a regulatory effect of pH changes, correcting an unstable pH in the case of low alkalinity.

- Prevents pH fluctuations when alkalinity is between 125-150 ppm.
- Shores up water balance.
- Enhances bathing comfort.

| GRANULATED | EFFICACY | ALL TYPES OF POOLS | DOSAGE |
|---|---|---|---|
| | IMMEDIATE | | 180g / +10ppm / 10m³ |

| | Format | Code | Standard Pack | Pallet weight Kg | Standard volume in m³ |
|---|---|---|---|---|---|
| CTX 21 Alka Plus | 6 kg | 03212 | 4 | 864 | - |

# CTX 22 Calc +

## DESCRIPTION

Increases water hardness at values below 175 ppm to prevent the corrosion of pool materials.

- Water hardness should be between 175 and 300 ppm.

| GRANULATED | EFFICACY | ALL TYPES OF POOLS | DOSAGE |
|---|---|---|---|
| | IMMEDIATE | | 150g / 10ppm / 10m³ |

| | Format | Code | Standard Pack | Pallet weight Kg | Standard volume in m³ |
|---|---|---|---|---|---|
| CTX 22 Calc + | 5 kg | 03214 | 4 | 720 | - |

# CTX 200/gr ClorShock

## DESCRIPTION

Chlorine treatment for water recovery.

- Fast-dissolving.
- High water solubility makes it quick to obtain the necessary residual chlorine amount.
- Stable chlorine, lasts longer in the water.
- Does not modify pH.

| GRANULATED | EFFICACY | ALL, SPECIALLY LINER AND POLIESTER | DOSAGE |
|---|---|---|---|
| | IMMEDIATE | | 150g / 10m³ |

| | Format | Code | Standard Pack | Pallet weight Kg | Standard volume in m³ |
|---|---|---|---|---|---|
| CTX 200gr Clor Shock | 1 kg | 03135 | 18 | 400 | - |
| CTX 200gr Clor Shock | 5 kg | 03137 | 4 | 720 | - |
| CTX 200gr Clor Shock | 25 kg | 10905 | 1 | 450 | - |

# CTX 250 ClorShock

These new codes only affect new formulas with low boric (European legislation)

## DESCRIPTION

Chlorine treatment for water recovery.

- Fast-dissolving.
- The tablets have an effervescent effect ensuring swift rise in chlorine rate.
- Stable chlorine, lasts longer in the water.
- Does not modify pH.
- Recommended for use in tiled pools or in skimmer.

| TABLET | EFFICACY | ALL TYPES OF POOLS | DOSAGE |
|---|---|---|---|
| 30g | IMMEDIATE | | 7 tablet / 10m³ |

| | Format | Code | Standard Pack | Pallet weight Kg | Standard volume in m³ |
|---|---|---|---|---|---|
| CTX 250 ClorShock | 1 kg | 75133 | 18 | 432 | - |
| CTX 250 ClorShock | 5 kg | 75134 | 4 | 720 | - |
| CTX 250 ClorShock | 25 kg | 75135 | 1 | 450 | - |

# CTX 12 Chlorine-bromine neutralizer

## DESCRIPTION

Reduces chlorine or bromine residual excess.

- Quickly removes the disinfectant excess so bathers can enjoy the pool safely.

| GRANULATED | EFFICACY | ALL TYPES OF POOLS | DOSAGE |
|---|---|---|---|
| | IMMEDIATE | | 10g / -0.5ppm / 10m³ |

| | Format | Code | Standard Pack | Pallet weight Kg | Standard volume in m³ |
|---|---|---|---|---|---|
| CTX 12 Chlorine-bromine neutralizer | 6 kg | 03211 | 4 | 576 | C01 |

# CTX 300 ClorLent

## DESCRIPTION

Chlorine treatment for disinfecting the pool.

- Essential for ongoing pool treatment since the disinfectant is released as the water needs it.
- Stable chlorine, lasts longer in the water.
- Suitable for shock treatments and general maintenance.

| POWDER | EFFICACY | ALL TYPES OF POOLS | DOSAGE |
|---|---|---|---|
| | DAILY | | 10g / 10m³ |

| | Format | Code | Standard Pack | Pallet weight Kg | Standard volume in m³ |
|---|---|---|---|---|---|
| CTX 300 ClorLent | 1 kg | 03147 | 18 | 400 | - |
| CTX 300 ClorLent | 5 kg | 03149 | 4 | 720 | - |
| CTX 300 ClorLent | 25 kg | 19194 | 1 | 450 | - |

# CTX 300/gr ClorLent

## DESCRIPTION

Chlorine treatment for disinfecting the pool.

- Essential for ongoing pool treatment since the disinfectant is released as the water needs it.
- Stable chlorine, lasts longer in the water.
- Suitable for shock treatments and general maintenance.

| GRANULATED | EFFICACY | ALL TYPES OF POOLS | DOSAGE |
|---|---|---|---|
| | DAILY | | 10g / 10m³ |

| | Format | Code | Standard Pack | Pallet weight Kg | Standard volume in m³ |
|---|---|---|---|---|---|
| CTX 300/gr ClorLent | 1 kg | 03154 | 18 | 400 | - |
| CTX 300/gr ClorLent | 5 kg | 03156 | 4 | 720 | - |
| CTX 300/gr ClorLent | 25 kg | 19195 | 1 | 450 | - |

# CTX 370 ClorLent

**These new codes only affect new formulas with low boric (European legislation)**

## DESCRIPTION

Chlorine treatment for disinfecting the pool.

- Slow-dissolving and continuous disinfection.
- Stable chlorine, lasts longer in the water.
- Dosing from the skimmer or in a floating dosing device is advised. Avoid direct contact with pools made with a polyester or vinyl liner or painted pools as it can cause discolorations.

| TABLET | EFFICACY | ALL TYPES OF POOLS | DOSAGE |
|---|---|---|---|
| 250g | WEEKLY | | 1 tablet / 25m³ |

| | Format | Code | Standard Pack | Pallet weight Kg | Standard volume in m³ |
|---|---|---|---|---|---|
| CTX 370 ClorLent | 1 kg | 75136 | 18 | 540 | - |
| CTX 370 ClorLent | 5 kg | 75137 | 4 | 720 | - |
| CTX 370 ClorLent | 25 kg | 75138 | 1 | 450 | - |

# CTX 370SB ClorLent boric free

## DESCRIPTION

Chlorine treatment for disinfecting the pool.

- PureDrop technology:
  - 0% boric acid
  - 50% long-lasting than standard tablets
  - Leaves no residue in the water.
- Slow-dissolving and continuous disinfection.
- Stable chlorine, lasts longer in the water.
- Dosing in the skimmer or in a floating dosing device is advised. Avoid direct contact with pools made with a polyester or vinyl liner or painted pools as it can cause discolorations.

| TABLET | EFFICACY | ALL TYPES OF POOLS | DOSAGE |
|---|---|---|---|
| 250g | 7 / 10 DAYS | | 1 tablet / 30m³ |

| | Format | Code | Standard Pack | Pallet weight Kg | Standard volume in m³ |
|---|---|---|---|---|---|
| CTX 370SB ClorLent | 4 kg | 69866 | 4 | 864 | - |

# CTX 120 Hypocal

## DESCRIPTION

Calcium hypochlorite treatment for disinfecting the pool.

- Fast-dissolving.
- Unstabilized chlorine, no cyanuric acid is added to the water.
- Suitable for shock treatments and general maintenance.

| GRANULATED | EFFICACY | ALL TYPES OF POOLS | DOSAGE |
|---|---|---|---|
| | DAILY | | 10g / 10m³ |

| | Format | Code | Standard Pack | Pallet weight Kg | Standard volume in m³ |
|---|---|---|---|---|---|
| CTX 120 Hypocal | 5 kg | 03130 | 4 | 360 | - |
| CTX 120 Hypocal | 25 kg | 03131 | 1 | 600 | - |

# CTX 400 ClorProtect

## DESCRIPTION

Keeps water disinfected for longer.

- Extends the disinfect action of chlorine since it prevents the rapid destruction caused by ultraviolet sunlight.
- Supplement for salt electrolysis or unstabilized chlorine treatments.
- For outdoor pools.
- Introduce the product in the skimmer or pump prefilter.

| POWDER | EFFICACY | ALL TYPES OF POOLS | DOSAGE |
|---|---|---|---|
| | IMMEDIATE | | 400g / 10m³ |

| | Format | Code | Standard Pack | Pallet weight Kg | Standard volume in m³ |
|---|---|---|---|---|---|
| CTX 400 ClorProtect | 4.5 kg | 73127 | 4 | 648 | - |

# CTX 161 ClorLiquid

## DESCRIPTION

Liquid chlorine for continuous water disinfection.

- Unstabilized chlorine, no cyanuric acid is added to the water.
- Suitable for shock treatments and general maintenance.

| LIQUID | EFFICACY | ALL TYPES OF POOLS | DOSAGE |
|---|---|---|---|
| | DAILY | | 500ml / 10m³ |

| | Format | Code | Standard Pack | Pallet weight Kg | Standard volume in m³ |
|---|---|---|---|---|---|
| CTX 161 ClorLiquid | 20 l | 47191 | 1 | 560 | - |

# CTX 390 / gr Multiaction

## DESCRIPTION

Multi-action, occasional-use chlorine treatment.

- Stable chlorine, lasts longer in the water.

| GRANULATED | EFFICACY | ALL, SPECIALLY TILE POOLS | DOSAGE |
|---|---|---|---|
| | DAILY | | 15g / 10m³ |

| | Format | Code | Standard Pack | Pallet weight Kg | Standard volume in m³ |
|---|---|---|---|---|---|
| CTX 390gr Multiaction | 5 kg | 07897 | 4 | 720 | - |
| CTX 390gr Multiaction | 25 kg | 19196 | 1 | 450 | - |

**These new codes only affect new formulas with low boric (European legislation)**

# CTX 342 Multiaction 5

## DESCRIPTION

Multi-action chlorine treatment for pool maintenance.

- Slow and continuous dissolution.
- Disinfection, antialgae, flocculant, coagulant, chlorine stabilizer.

| TABLET | EFFICACY | ALL, SPECIALLY LINER AND POLIESTER | DOSAGE |
|---|---|---|---|
| 250g | WEEKLY | | 1 tablet / 25m³ |

| | Format | Code | Standard Pack | Pallet weight Kg | Standard volume in m³ |
|---|---|---|---|---|---|
| CTX 342 Multiaction 5 | 1 kg | 75140 | 18 | 540 | - |
| CTX 342 Multiaction 5 | 5 kg | 75141 | 4 | 720 | - |
| CTX 342 Multiaction 5 | 25 kg | 75142 | 1 | 450 | - |

# CTX 393 Multiaction 5

**These new codes only affect new formulas with low boric (European legislation)**

## DESCRIPTION

Multi-action chlorine treatment for pool maintenance.

- Slow and continuous dissolution.
- Disinfection, antialgae, flocculant, coagulant, chlorine stabilizer.

| TABLET | EFFICACY | ALL TYPES OF POOLS | DOSAGE |
|---|---|---|---|
| 250g | WEEKLY | | 1 tablet / 25m³ |

| | Format | Code | Standard Pack | Pallet weight Kg | Standard volume in m³ |
|---|---|---|---|---|---|
| CTX 393 Multiaction 5 | 1 kg | 75143 | 18 | 540 | - |
| CTX 393 Multiaction 5 | 5 kg | 75144 | 4 | 720 | - |
| CTX 393 Multiaction 5 | 25 kg | 75145 | 1 | 450 | - |

# CTX 379 Multiaction 5

**These new codes only affect new formulas with low boric (European legislation)**

## DESCRIPTION

Multi-action chlorine treatment for pool maintenance.

- Slow and continuous dissolution.
- Disinfection, antialgae, flocculant, coagulant, chlorine stabilizer.

| TABLET | EFFICACY | ALL, SPECIALLY CARTIGE FILTERS | DOSAGE |
|---|---|---|---|
| 250g | WEEKLY | | 1 tablet / 25m³ |

| | Format | Code | Standard Pack | Pallet weight Kg | Standard volume in m³ |
|---|---|---|---|---|---|
| CTX 379 Multiaction 5 | 5 kg | 75146 | 4 | 450 | - |

# CTX 391 Multiaction 10

**These new codes only affect new formulas with low boric (European legislation)**

## DESCRIPTION

Multi-action chlorine treatment for pool maintenance.

- Slow and continuous dissolution.
- Disinfection, antialgae, algiastatic, flocculant, coagulant, chlorine stabilizer, antical, metal scavenger, corrosion protector, pH reducer.

| TABLET | EFFICACY | ALL TYPES OF POOLS | DOSAGE |
|---|---|---|---|
| 250g | WEEKLY | | 1 tablet / 25m³ |

| | Format | Code | Standard Pack | Pallet weight Kg | Standard volume in m³ |
|---|---|---|---|---|---|
| CTX 391 Multiaction 10 | 5 kg | 75147 | 4 | 720 | - |

# CTX 393SB Multiaction 10 Boric Free

## DESCRIPTION

Multi-action chlorine treatment for pool maintenance.

- Slow and continuous dissolution.
- Disinfection, antialgae, algiastatic, flocculant, coagulant, chlorine stabilizer, antical, metal scavenger, corrosion protector, pH reducer.

Pure Drop technology:

- 0% boric acid
- 50% long-lasting than standard tablets
- Leaves no residue in the water.

| TABLET | EFFICACY | ALL TYPES OF POOLS | DOSAGE |
|---|---|---|---|
| 250g | 7-10 days | | 1 tablet / 30m³ |

| | Format | Code | Standard Pack | Pallet weight Kg | Standard volume in m³ |
|---|---|---|---|---|---|
| CTX 393SB Multi action 10 | 4 kg | 69868 | 4 | 864 | - |

# CTX 230 Dosilong

These new codes only affect new formulas with low boric (European legislation)

## DESCRIPTION

Floating dosing device for multi-action treatment for pool maintenance.

- Ensures ongoing and constant dosing, keeping the water disinfected and promoting an algaecide and flocculant action.
- Specially designed for pools with a skimmer.
- Easy to use, no product handling.

| FLOATING DISPENSER | EFFICACY | ALL TYPES OF POOLS | DOSAGE |
|---|---|---|---|
| | 3-4 WEEKS | | 1 / 50m³ |

| | Format | Code | Standard Pack | Pallet weight Kg | Standard volume in m³ |
|---|---|---|---|---|---|
| CTX 230 Dosilong | 1.75 kg | 75149 | 6 | 96 | - |

# CTX 130 Bromine

## DESCRIPTION

Bromine treatment to disinfect the pool.

- Very slow-dissolving and continuous disinfection.
- Pleasant bathing, no odors.
- Does not irritate eyes.

| TABLET | EFFICACY | ALL TYPES OF POOLS | DOSAGE |
|---|---|---|---|
| 20g | WEEKLY | | 1.0 - 3.0 ppm |

| | Format | Code | Standard Pack | Pallet weight Kg | Standard volume in m³ |
|---|---|---|---|---|---|
| CTX 130 Bromine | 5 kg | 03183 | 4 | 400 | - |
| CTX 130 Bromine | 20 kg | 27129 | 1 | 540 | - |

# CTX 17 Genbrom

## DESCRIPTION

Inorganic compound that transform the active chlorine generated by a salt electrolysis treatment into bromine to disinfect the pool and keep it clean and hygienically pure.

- Bromine disinfectant efficacy is not reduced in contact with organic matter.
- More pleasant bathing without irritating the eyes or unpleasant odors.
- Ideal for covered pools treated with salt electrolysis.

| GRANULATED | EFFICACY | ALL TYPES OF POOLS | DOSAGE |
|---|---|---|---|
| | IMMEDIATE | | 500g / 10m³ |

| | Format | Code | Standard Pack | Pallet weight Kg | Standard volume in m³ |
|---|---|---|---|---|---|
| CTX 17 Genbrom | 5 kg | 23117 | 4 | 720 | - |

# CTX 575 Algae destroyer

## DESCRIPTION

Concentrated product that successfully removes all type of algae, including hard-to-budge black algae.

- Fast-working, long-lasting.
- Non-foaming.

| LIQUID | EFFICACY | ALL, EXCEPT LINER AND POLYESTER | DOSAGE |
|---|---|---|---|
| CONCENTRATED | 4 to 8h | | 200ml / 10m³ |

| | Format | Code | Standard Pack | Pallet weight Kg | Standard volume in m³ |
|---|---|---|---|---|---|
| CTX 575 Algae destroyer | 1 l | 71653 | 12 | 480 | - |
| CTX 575 Algae destroyer | 3 l | 71654 | 6 | 576 | - |

# CTX 576 Algae Destroyer 0% Cooper

## DESCRIPTION

Algae destroyer without Cooper. Removes all type of algaes. Special for liner pools.

- Fast-working.
- It does not damage the surfaces.

| GRANULATED | EFFICACY | ALL, SPECIALLY LINER AND POLIESTER | DOSAGE |
|---|---|---|---|
| | IMMEDIATE | | 25g / m³ |

| | Format | Code | Standard Pack | Pallet weight Kg | Standard volume in m³ |
|---|---|---|---|---|---|
| CTX 576 Algae destroyer without Cooper | 1 kg | 76792 | 20 | 400 | - |

# CTX 500C Algastop Power

Concentrated product that prevents algae formation and growth.

- High bactericide, algaecide, and fungicide power.
- Fast-working, long-lasting.
- With an easy-to-use dosing bottle.

| LIQUID | EFFICACY | ALL TYPES OF POOLS | DOSAGE |
|---|---|---|---|
| CONCENTRATED | WEEKLY | | 8ml / 10m³ |

| | Format | Code | Standard Pack | Pallet weight Kg | Standard volume in m³ |
|---|---|---|---|---|---|
| CTX 500C Algastop Power | 1 l | 63120 | 12 | 480 | - |

# CTX 530C Algastop Ultra Power

## DESCRIPTION

Concentrated product that prevents algae formation and growth, with a flocculant effect.

- High bactericide, algaecide, and fungicide power with a microflocculant power boosting its capacity to prevent the appearance of floating algae.
- Fast-working, long-lasting.
- Non-foaming, making it ideal for pools with counterflow systems or similar, water parks, etc.
- With an easy-to-use dosing bottle.

| LIQUID | EFFICACY | ALL TYPES OF POOLS | DOSAGE |
|---|---|---|---|
| CONCENTRATED | WEEKLY | | 12ml / 10m³ |

| | Format | Code | Standard Pack | Pallet weight Kg | Standard volume in m³ |
|---|---|---|---|---|---|
| CTX 530C Algastop Ultra Power | 1 l | 63122 | 12 | 480 | - |

# CTX 500 Algastop

## DESCRIPTION

Prevents algae formation and growth.

- High bactericide, algaecide, and fungicide power.
- Fast-working, long-lasting.

| LIQUID | EFFICACY | ALL TYPES OF POOLS | DOSAGE |
|---|---|---|---|
| | WEEKLY | | 50ml / 10m³ |

| | Format | Code | Standard Pack | Pallet weight Kg | Standard volume in m³ |
|---|---|---|---|---|---|
| CTX 500 Algastop | 5 l | 03194 | 4 | 640 | - |
| CTX 500 Algastop | 25 l | 03195 | 1 | 600 | - |

# CTX 60 AlgaStop Cristal

## DESCRIPTION

Prevents algae formation and growth.

- Clarifies the water, increasing transparency.
- Keeps water blue.

| LIQUID | EFFICACY | ALL TYPES OF POOLS | DOSAGE |
|---|---|---|---|
| | WEEKLY | | 50ml / 10m³ |

| | Format | Code | Standard Pack | Pallet weight Kg | Standard volume in m³ |
|---|---|---|---|---|---|
| CTX 60 AlgaStop Cristal | 5 l | 03190 | 4 | 640 | - |

# CTX 530 Algastop Ultra

## DESCRIPTION

Prevents algae formation and growth.

- High bactericide, algaecide, and fungicide power.
- Fast-working, long-lasting.
- Non-foaming, making it ideal for pools with counterflow systems or similar, water parks, etc.

| LIQUID | EFFICACY | ALL TYPES OF POOLS | DOSAGE |
|---|---|---|---|
| | WEEKLY | | 25ml / 10m³ |

| | Format | Code | Standard Pack | Pallet weight Kg | Standard volume in m³ |
|---|---|---|---|---|---|
| CTX 530 Algastop Ultra | 5 l | 03204 | 4 | 640 | - |
| CTX 530 Algastop Ultra | 25 l | 03205 | 1 | 600 | - |

# CTX 39 Pool Gel

## DESCRIPTION

Single-dose flocculant gel for crystal-clear water.

- Increases filter and disinfectant efficacy.
- Easy to use, no product handling.

| MONODOSE | EFFICACY | ALL TYPES OF POOLS | DOSAGE |
|---|---|---|---|
| | 15 DAYS | | 1 MONODOSE / up to 60m³ |

| | Format | Code | Standard Pack | Pallet weight Kg | Standard volume in m³ |
|---|---|---|---|---|---|
| CTX 39 Pool gel | Pack 36 un. | 61363 | 2 | 7200 | - |
| CTX 39 Pool gel (un) | | 61363UN | | - | - |

# CTX Care Pods

## DESCRIPTION

Multifunctional water-soluble film, single-dose.

- Stops water turning cloudy.
- Prevents algae growth.
- Prevents foam generation.
- Immediate effect.
- Efficacy unaltered by possible temperature rises or pH variations.

| MONODOSE | EFFICACY | ALL TYPES OF POOLS | DOSAGE |
|---|---|---|---|
| | WEEKLY | | 1 MONODOSE / up to 50m³ |

| | Format | Code | Standard Pack | Pallet weight Kg | Standard volume in m³ |
|---|---|---|---|---|---|
| CTX Care Pods | 35 g | 73119 | - | 816 | - |
| CTX Care Pods (un) | 35 g | 73119UN | - | 816 | - |

# CTX Natural Flocculant

## DESCRIPTION

Naturally sourced concentrate that keeps water crystal-clear.

- Removes remains of body creams and oils, foam and excess metal.
- Suitable for salt electrolysis, boosting output.
- Compatible with all disinfectants.
- Easy-clean filter.
- With an easy-to-use dosing bottle.

| LIQUID | EFFICACY | ALL TYPES OF POOLS | DOSAGE |
|---|---|---|---|
| | WEEKLY | | 8ml / 10m³ |

| | Format | Code | Standard Pack | Pallet weight Kg | Standard volume in m³ |
|---|---|---|---|---|---|
| CTX Natural Flocculant | 1 l | 63107 | 12 | 480 | - |

# CTX 43 Flocculant Deluxe

## DESCRIPTION

Removes the particles from the water that turn it cloudy.

- Clean, crystal-clear water.
- Fast flocculation, continuous clarification.
- Improves disinfectant output.

| CARTIDGE | EFFICACY | ALL TYPES OF POOLS | DOSAGE |
|---|---|---|---|
| | 10 DAYS | | 1 CARTRIDGE / up to 50m³ |

| | Format | Code | Standard Pack | Pallet weight Kg | Standard volume in m³ |
|---|---|---|---|---|---|
| CTX 43 Flocculant Deluxe | 1 kg | 46664 | 14 | 490 | - |

# CTX 42 Flocculant

## DESCRIPTION

Removes the particles from the water that turn it cloudy.

- Improves water transparency.
- Coagulant action.
- Place tablet in skimmer.

| TABLET | EFFICACY | ALL TYPES OF POOLS | DOSAGE |
|---|---|---|---|
| 100g | 10 DAYS | | 1 TABLET UP TO 50m³ |

| | Format | Code | Standard Pack | Pallet weight Kg | Standard volume in m³ |
|---|---|---|---|---|---|
| CTX 42 Flocculant | 5 kg | 03119 | 4 | 480 | - |
| CTX 42 Flocculant | 25 kg | 03120 | 1 | 450 | - |

# CTX 37 Xtreme Floc

## DESCRIPTION

Shock treatment to completely remove particles from the water.

- For crystal-clear water.
- Slow and controlled dissolution.
- Coagulant and flocculant action.
- Improves filter and disinfectant output.
- Removes metal ions like iron and manganese and eliminates organic matter

| TABLET | EFFICACY | ALL TYPES OF POOLS | DOSAGE |
|---|---|---|---|
| 20g | 8h | | 1 TABLET / 20m³ |

| | Format | Code | Standard Pack | Pallet weight Kg | Standard volume in m³ |
|---|---|---|---|---|---|
| CTX 37 Xtreme Floc | 20 un. | 60044 | 8 | 144 | - |

POOL CHEMICALS FLOCCULANTS

# CTX 41 Flocculant

## DESCRIPTION

Shock treatment that removes the particles from the water that turn it cloudy.

- Clarifies the water, restoring transparency.
- Fast-acting.
- Improves disinfectant output.

| LIQUID | EFFICACY | ALL TYPES OF POOLS | DOSAGE |
|---|---|---|---|
| | 8h | | 100ml / 10m³ |

| | Format | Code | Standard Pack | Pallet weight Kg | Standard volume in m³ |
|---|---|---|---|---|---|
| CTX 41 Flocculant | 5 l | 03117 | 4 | 640 | - |
| CTX 41 Flocculant | 25 l | 03118 | 1 | 600 | - |

POOL CHEMICALS CLEANERS

# CTX 51 WallCleaner Plus

## DESCRIPTION

Cleans the pool basin.

- Detergent cleaner specially formulated to remove the limescale, organic residues, and mineral sediments that form over time and attach to pool surfaces.

| LIQUID | EFFICACY | ALL TYPES OF POOLS | DOSAGE |
|---|---|---|---|
| | 30min | | 2l / 10m³ |

| | Format | Code | Standard Pack | Pallet weight Kg | Standard volume in m³ |
|---|---|---|---|---|---|
| CTX 51 WallCleaner Plus | 5 l | 03124 | 4 | 640 | - |
| CTX 51 WallCleaner Plus | 25 l | 03125 | 1 | 600 | - |

# CTX 53 WallCleaner Liner

## DESCRIPTION

Cleans the pool basin.

- Detergent cleaner specially formulated to remove the limescale, organic residues, and mineral sediments that form over time and attach to pool surfaces.
- Special for liner or polyester pools.

| LIQUID | EFFICACY | ALL TYPES OF POOLS | DOSAGE |
|---|---|---|---|
| | 30min | | 2l / 10m³ |

| | Format | Code | Standard Pack | Pallet weight Kg | Standard volume in m³ |
|---|---|---|---|---|---|
| CTX 53 WallCleaner | 5 l | 07882 | 4 | 640 | - |

# CTX 56 Netoline

## DESCRIPTION

Cleans the waterline.

- Gel detergent specially formulated to remove oil, dirt, and limescale from pool edges, walls and surrounds as required.
- Due to gel consistency it sticks to the walls, preventing splash-back.

| GEL | EFFICACY | ALL TYPES OF POOLS | DOSAGE |
|---|---|---|---|
| | IMMEDIATE | | SPONGE |

| | Format | Code | Standard Pack | Pallet weight Kg | Standard volume in m³ |
|---|---|---|---|---|---|
| CTX 56 Netoline | 5 l | 38811 | 4 | 640 | - |

# CTX 75 Waterline Cleaner

## DESCRIPTION

Cleans the waterline.

- Gel detergent specially formulated to remove oil, dirt, and limescale from pool edges, walls and surrounds as required.

| LIQUID | EFFICACY | ALL TYPES OF POOLS | DOSAGE |
|---|---|---|---|
| | IMMEDIATE | | SPONGE |

| | Format | Code | Standard Pack | Pallet weight Kg | Standard volume in m³ |
|---|---|---|---|---|---|
| CTX 75 Waterline Cleaner | 5 l | 03222 | 4 | 640 | - |
| CTX 75 Waterline Cleaner | 25 l | 03223 | 1 | 800 | - |

# CTX 70 Surfosan

## DESCRIPTION

Sanitizer multi-surface.

- Does not alter water parameters.
- Respectful with the surface.

| LIQUID | EFFICACY | ALL TYPES OF POOLS | DOSAGE |
|---|---|---|---|
| | IMMEDIATE | | SPONGE |

| | Format | Code | Standard Pack | Pallet weight Kg | Standard volume in m³ |
|---|---|---|---|---|---|
| CTX 70 Surfosan | 1 l | 73941 | 9 | 432 | - |
| CTX 70 Surfosan | 5 l | 05453 | 4 | 640 | - |
| CTX 70 Surfosan | 25 l | 05454 | 1 | 600 | - |

# CTX 600 Descaler

## DESCRIPTION

Prevents limescale.

- Removes and prevents limescale. Helps stop filters from clogging up and corrosion of metal parts in the recirculation and filter system.

| LIQUID | EFFICACY | ALL TYPES OF POOLS | DOSAGE |
|---|---|---|---|
| | IMMEDIATE | | SPONGE |

| | Format | Code | Standard Pack | Pallet weight Kg | Standard volume in m³ |
|---|---|---|---|---|---|
| CTX 600 Descaler | 5 l | 03229 | 4 | 640 | - |

# CTX 700 Descaler Super

## DESCRIPTION

Prevents limescale and iron stains.

- Prevents limescale formation on walls, ladders, bottoms and filters as a result of hard water.
- Keeps the water recirculation, pump, and heat-exchange circuits clean.
- Prevents stains forming on the basin as a result of iron in the water.
- Non-foaming.

| LIQUID | EFFICACY | ALL TYPES OF POOLS | DOSAGE |
|---|---|---|---|
| | IMMEDIATE | | SPONGE |

| | Format | Code | Standard Pack | Pallet weight Kg | Standard volume in m³ |
|---|---|---|---|---|---|
| CTX 700 Descaler Super | 5 l | 03231 | 4 | 640 | - |

# CTX 800 Inhibical

## DESCRIPTION

Prevents the limescale produced by using liquid chlorine that clogs up dosing systems (dosing pumps, tubes, etc.).

- Prevents the corrosion of metal pool parts.

| LIQUID | EFFICACY | ALL TYPES OF POOLS | DOSAGE |
|---|---|---|---|
| | DAILY | | 500ml / 50 cl liquid |

| | Format | Code | Standard Pack | Pallet weight Kg | Standard volume in m³ |
|---|---|---|---|---|---|
| CTX 800 Inhibical | 5 l | 20265 | 4 | 640 | - |

# CTX 35 Descaler electrolyte cells

## DESCRIPTION

Removes limescale that forms and sticks to electrodes and reduces electrochlorinator output and performance.

- Extends electrochlorinator life.

| LIQUID | EFFICACY | ALL TYPES OF POOLS | DOSAGE |
|---|---|---|---|
| | 8h | | 100ml / 10m³ |

| | Format | Code | Standard Pack | Pallet weight Kg | Standard volume in m³ |
|---|---|---|---|---|---|
| CTX 35 Descaler | 5 l | 31127 | 4 | 640 | - |

POOL CHEMICALS CLEANERS

# CTX 57 Netalfilter

## DESCRIPTION

Cleans the inside of sand filters.

- Removes limescale caused by salts in the water and dirt deposited inside sand filters.
- Non-foaming.
- For stainless steel or sand/polyester, silex or ecoglass.

| LIQUID | EFFICACY | POOLS WITH SAND FILTER | DOSAGE |
|---|---|---|---|
| | 4h / 8h | | 2 l / 10kg sand |

| | Format | Code | Standard Pack | Pallet weight Kg | Standard volume in m³ |
|---|---|---|---|---|---|
| CTX 57 Netafilter | 5 l | 08671 | 4 | 640 | - |

POOL CHEMICAL KITS

# CTX 205 Baby Pool

## DESCRIPTION

Complete kit for small inflatable or removable pools.

- Keeps the water clean without having to empty the pool
- It contains 0.5 l of dichlor granules and 0.5 l of concentrated algicide.

| KIT | TYPES OF POOLS | DISINFECTION | EFFICACY | ALGICIDE | EFFICACY |
|---|---|---|---|---|---|
| with dispenser | Mini Pools | | DAILY | | WEEKLY |

| | Format | Code | Standard Pack | Pallet weight Kg | Standard volume in m³ |
|---|---|---|---|---|---|
| CTX 205 Baby Pool | 1 uni. | 03176 | 14 | | - |

# CTX 550 WinterStar

## DESCRIPTION

Complete treatment in winter.

- Prevents algae and bacteria proliferation.
- Prevents the formation of lime.
- Non-foaming.

| LIQUID | EFFICACY | ALL TYPES OF POOLS | DOSAGE |
|---|---|---|---|
| | 3 MONTHS | | 500ml / 10m³ |

| | Format | Code | Standard Pack | Pallet weight Kg | Standard volume in m³ |
|---|---|---|---|---|---|
| CTX 550 WinterStar | 5 l | 03226 | 4 | 640 | - |
| CTX 550 WinterStar | 25 l | 20906 | 1 | 600 | - |

# CTX 551 WinterStar Liner

## DESCRIPTION

Complete treatment in winter.

- Prevents algae and bacteria proliferation.
- Non-foaming.

| LIQUID | EFFICACY | ALL TYPES OF POOLS | DOSAGE |
|---|---|---|---|
| | 3 MONTHS | | 830ml / 10m³ |

| | Format | Code | Standard Pack | Pallet weight Kg | Standard volume in m³ |
|---|---|---|---|---|---|
| CTX 551 WinterStar Liner | 5 l | 17228 | 4 | 640 | - |

# CTX 551C WinterStar Power

## DESCRIPTION

Concentrated product for complete treatment in winter.

- Prevents algae and bacteria proliferation.
- Non-foaming.
- With an easy-to-use dosing bottle.

| LIQUID | EFFICACY | ALL TYPES OF POOLS | DOSAGE |
|---|---|---|---|
| | 3 MONTHS | | 200ml / 10m³ |

| | Format | Code | Standard Pack | Pallet weight Kg | Standard volume in m³ |
|---|---|---|---|---|---|
| CTX 551C WinterStar Power | 1 l | 63163 | 12 | 480 | - |

# CTX 235 Sleepy

## DESCRIPTION

Floating dosing device for complete treatment in winter.

- Prevents algae and bacteria proliferation.
- Easy to use, no product handling.

| FLOATING DISPENSER | EFFICACY | ALL TYPES OF POOLS | DOSAGE |
|---|---|---|---|
| | 3 MONTHS | | 1ml / 50m³ |

**These new codes only affect new formulas with low boric (European legislation)**

| | Format | Code | Standard Pack | Pallet weight Kg | Standard volume in m³ |
|---|---|---|---|---|---|
| CTX 235 Sleepy | 1.75 kg | 75150 | 6 | 96 | - |

# CTX 911 pH Minus

## DESCRIPTION

Granulated product to reduce the pH of the spa water. Fast dissolution without residues.

| | Format | Code | Standard Pack | Pallet weight Kg | Standard volume in m³ |
|---|---|---|---|---|---|
| CTX 911 pH Minus | 1 kg | 75976 | 9 | 324 | - |

# CTX 912 pH Plus

## DESCRIPTION

Granulated product to increase the pH of the spa water. Fast dissolution without residues.

| | Format | Code | Standard Pack | Pallet weight Kg | Standard volume in m³ |
|---|---|---|---|---|---|
| CTX 912 pH Plus | 1 kg | 75977 | 9 | 324 | - |

# CTX 913 Hardness Stabilizer

## DESCRIPTION

Liquid to prevent limescale. Prevents stains and save water from becoming cloudy.

| | Format | Code | Standard Pack | Pallet weight Kg | Standard volume in m³ |
|---|---|---|---|---|---|
| CTX 913 hardness stabilizer | 1 l | 75978 | 9 | 324 | - |

# CTX 921 Bromine Tablets

## DESCRIPTION

Bromine tablets for water disinfection without smell and with a long-lasting effect.

| | Format | Code | Standard Pack | Pallet weight Kg | Standard volume in m³ |
|---|---|---|---|---|---|
| CTX 921 bromine tablets | 1 kg | 75979 | 9 | 324 | - |

# CTX 922 Granulate Chlorine

## DESCRIPTION

Chlorine granules to disinfect and guarantee hygienic spa water.

| | Format | Code | Standard Pack | Pallet weight Kg | Standard volume in m³ |
|---|---|---|---|---|---|
| CTX 922 granulate chlorine | 1 kg | 75980 | 9 | 324 | - |

# CTX 931 Clarifyer

## DESCRIPTION

Concentrated liquid to prevent cloudy water problems in the spa. For all types of filters.

| | Format | Code | Standard Pack | Pallet weight Kg | Standard volume in m³ |
|---|---|---|---|---|---|
| CTX 931 clarifyer | 1 l | 75981 | 9 | 324 | - |

# CTX 932 Anti Foam

## DESCRIPTION

Liquid to remove spa foam. Fast and effective action.

| | Format | Code | Standard Pack | Pallet weight Kg | Standard volume in m³ |
|---|---|---|---|---|---|
| CTX 951 anti foam | 1 l | 75985 | 9 | 324 | - |

# CTX 941 Filter Cleaner

## DESCRIPTION

Liquid for cleaning cartridge filters.

| | Format | Code | Standard Pack | Pallet weight Kg | Standard volume in m³ |
|---|---|---|---|---|---|
| CTX 941 filter cleaner | 1 l | 75982 | 9 | 324 | - |

# CTX 942 Surface Cleaner

## DESCRIPTION

Concentrated liquid for cleaning the interior lining of spas. For all types of surfaces.

| | Format | Code | Standard Pack | Pallet weight Kg | Standard volume in m³ |
|---|---|---|---|---|---|
| CTX 942 surface cleaner | 1 l | 75983 | 9 | 324 | - |

# CTX 943 Pipework Cleaner

## DESCRIPTION

Liquid to degrease and clean hydraulic circuit.

| | Format | Code | Standard Pack | Pallet weight Kg | Standard volume in m³ |
|---|---|---|---|---|---|
| CTX 943 Pipework Cleaner | 1 l | 75984 | 9 | 324 | - |

# CTX 971 Kit Bromine

## DESCRIPTION

Kit for the disinfection of spa water with bromine.

| | Format | Code | Standard Pack | Pallet weight Kg | Standard volume in m³ |
|---|---|---|---|---|---|
| CTX 971 Kit Bromine | - | 75987 | 72 | 288 | - |

# CTX 7 - in 1 - Test Strips

## DESCRIPTION

Quick and easy test for Free chlorine, total chlorine (total bromine), pH, total alkalinity, total hardness i cyanuric acid. Each pack contains 50 test strips

| Format | Code | Standard Pack | Pallet weight Kg | Standard volume in m³ |
|---|---|---|---|---|
| - | 76648 | - | - | - |

# CTX 6 - in 1 - Test Strips

## DESCRIPTION

Quick and easy test for Free chlorine or bromine, pH, total alkalinity, cyanuric acid and total hardness. Each pack contains 50 test strips.

| Format | Code | Standard Pack | Pallet weight Kg | Standard volume in m³ |
|---|---|---|---|---|
| - | 76678 | - | - | - |

# CTX 4 - in 1 - Test Strips: Free Chlorine

## DESCRIPTION

Quick and easy test for Free chlorine, cyanuric acid, pH and total alkalinity in pools treated with chlorine. Each pack contains 50 strips

| Format | Code | Standard Pack | Pallet weight Kg | Standard volume in m³ |
|---|---|---|---|---|
| - | 76645 | - | - | - |

# CTX 4 - in 1 - Test Strips: Free Bromine

## DESCRIPTION

Quick and easy test for Total bromine, pH, total alkalinity and total hardness in pools treated with bromine. Each pack contains 50 strips

| Format | Code | Standard Pack | Pallet weight Kg | Standard volume in m³ |
|---|---|---|---|---|
| - | 76647 | - | - | - |

# CTX 3 - in 1 - Test Strips : MPS

## DESCRIPTION

Quick and easy test for Potassium monopersulphate, pH and total alkalinity. Each pack contains 50 test strips

| Format | Code | Standard Pack | Pallet weight Kg | Standard volume in $m^3$ |
|---|---|---|---|---|
| - | 76649 | - | - | - |

# CTX Salt Test Strip

## DESCRIPTION

Salt test strips for checking salt levels. Salt levels must be checked on a regular basis as the water is renewed. Each pack contains 10 test strips

| Format | Code | Standard Pack | Pallet weight Kg | Standard volume in $m^3$ |
|---|---|---|---|---|
| - | 76646 | - | - | - |

# CTX SPA SENSATIONS 6 IN 1

## DESCRIPTION

Strips to determine the pH value, chlorine, bromine, alkalinity and hardness of the spa water.

| Format | Code | Standard Pack | Pallet weight Kg | Standard volume in $m^3$ |
|---|---|---|---|---|
| - | 75986 | - | - | - |

# YOUR POOL CARE STARTS HERE

## New AstralPool range
# MAINTENANCE
### THE 6 STEPS TO MAINTAIN YOUR POOL

**M**

**BALANCE** 1 adjust water parameters (pH and alkalinity)
**DISINFECTION** 2 add chlorine
**ALGICIDE** 3 algae prevention
**FLOCCULANT** 4 keep water clean and clear
**CLEANERS** 5 cleaning of pool elements
**WINTER CARE** 6 to maintain your pool in Winter

## A GOOD MAINTENANCE IS THE BEST SOLUTION

## However if something unexpected happens, RELAX!

CLOUDY WATER?
GREEN WATER OF ALGAE?
ITCHY EYES AND SMELL OF CHLORINE?
UNSTABLE PH?

**S**

## New AstralPool range
# SOLUTION
### PREPARED FOR THE UNEXPECTED

Range
MAINTENANCE
or SOLUTION

Product name + Description

Product benefits

| Formats | Duration<br>Efficacy in the water | Type of pools | Dose<br>Dose per m³ |
|---|---|---|---|
| Granulate | 1" Immediate | All pools | |
| Tablets | 8h | Pools with skimmer and sand filter | |
| Liquid | Daily | Special sand filter | |
| Concentrated liquid | 10 Days | Special liner | |
| Powder | Recovery | Special tile | |

# SPA COLLECTION

## Live the SPA experience with the NEW AstralPool range

A range of products designed for the care and maintenance of your SPA.

Find the new range on pages 339, 340, 341.

ASTRALPOOL

# POOL TEST STRIPS

## DESIGNED TO MEASURE POOL WATER LEVELS

### NEW PRODUCT

## 6 IN 1

Free chlorine
Bromine
pH
Total alkalinity
Total hardness
Cyanuric acid

### PACKAGING RELAUNCH

From blister to box

## 3 IN 1

Free chlorine
pH
Total alkalinity

## 7 IN 1

Free chlorine
Total chlorine
Total bromine
pH
Total alkalinity
Total hardness
Cyanuric acid

Find them in the water treatment section on page 342.

ASTRALPOOL

POOL CHEMICALS REGULATORS

# Solid pH Minor

## DESCRIPTION

Solid pH reducer. For adjusting the pH to between 7.2 and 7.6.

| | Format | Code | Standard Pack | Standard weight in kg | Standard volume in m³ |
|---|---|---|---|---|---|
| Square packaging | 1.5 kg | 11384 | 18 | 600 | - |
| Square packaging | 5 kg | 74651 | 4 | 720 | - |

# Solid pH Plus

## DESCRIPTION

Solid pH enhancer. For adjusting the pH to between 7.2 and 7.6.

| | Format | Code | Standard Pack | Standard weight in kg | Standard volume in m³ |
|---|---|---|---|---|---|
| Square packaging | 1 kg | 16538 | 18 | 400 | - |
| Square packaging | 5 kg | 74896 | 4 | 720 | - |

# Liquid pH Minor

## DESCRIPTION

Liquid pH reducer. Ideal for dosing with a pump.

| | Format | Code | Standard Pack | Standard weight in kg | Standard volume in m³ |
|---|---|---|---|---|---|
| **Liquid pH Minor** | | | | | |
| for professional use | 10 l | 43290 | 1 | 480 | - |
| for professional use | 20 l | 73140 | 1 | 600 | - |
| for end users | 10 l | 73664 | 1 | 480 | - |
| for end users | 20 l | 73674 | 1 | 600 | - |

# Liquid pH Plus

## DESCRIPTION

Liquid pH enhancer. Ideal for dosing with a pump.

| | Format | Code | Standard Pack | Standard weight in kg | Standard volume in m³ |
|---|---|---|---|---|---|
| | 20 l | 74863 | 1 | 600 | - |

# Alkalinity enhancer

## DESCRIPTION

Powder for increasing water alkalinity when it falls below 125 ppm.

| | Format | Code | Standard Pack | Standard weight in kg | Standard volume in m³ |
|---|---|---|---|---|---|
| Square packaging | 6 kg | 15976 | 4 | 864 | - |

For minimum amounts, ask your dealer

POOL CHEMICALS DISINFECTANTS

# Chlorine Shock granulate

## DESCRIPTION

Trichloride granules with 55% free available chlorine.

| | Format | Code | Standard Pack | Standard weight in kg | Standard volume in m³ |
|---|---|---|---|---|---|
| Square packaging | 1 kg | 11393 | 18 | 400 | - |
| Square packaging | 5 kg | 11394 | 4 | 720 | - |

# Chlorine Shock 30g tablets

These new codes only affect new formulas with low boric (European legislation)

## DESCRIPTION

Trichloride 30-g tablets with 50% free available chlorine.

| | Format | Code | Standard Pack | Standard weight in kg | Standard volume in m³ |
|---|---|---|---|---|---|
| Square packaging | 1 kg | 75156 | 18 | 432 | - |
| Square packaging | 5 kg | 75157 | 4 | 720 | - |

# Chlorine Lent granulate

## DESCRIPTION

Trichloride granules with 90% free available chlorine.

| | Format | Code | Standard Pack | Standard weight in kg | Standard volume in m³ |
|---|---|---|---|---|---|
| Square packaging | 1 kg | 11404 | 18 | 400 | - |
| Square packaging | 5 kg | 11405 | 4 | 720 | - |
| | 30 kg | 11406 | 1 | 540 | - |

# Chlorine Lent 250g tablets

These new codes only affect new formulas with low boric (European legislation)

## DESCRIPTION

Slow-dissolving 250-g trichloride blocks with 90% free available chlorine.

| | Format | Code | Standard Pack | Standard weight in kg | Standard volume in m³ |
|---|---|---|---|---|---|
| Square packaging | 5 kg | 75162 | 4 | 720 | - |
| | 25 Kg | 75163 | 1 | 450 | - |

For minimum amounts, ask your dealer



# Action 10

These new codes only affect new formulas with low boric (European legislation)

## DESCRIPTION

250-g multipurpose tablets that perform the functions of the following 10 products: disinfectant, algicide, bactericide, algaestat, virucide, fungicide, flocculant-coagulant, pH reducer, stabilizer and descaler.

| | Format | Code | Standard Pack | Standard weight in kg | Standard volume in m³ |
|---|---|---|---|---|---|
| Square packaging | 5 kg | 75158 | 4 | 720 | - |

# Multi-action granules

## DESCRIPTION

Granules that act as a bactericide, algicide and flocculant.

| | Format | Code | Standard Pack | Standard weight in kg | Standard volume in m³ |
|---|---|---|---|---|---|
| | 1 kg | 15983 | 18 | 360 | - |
| | 5 kg | 15984 | 4 | 720 | - |
| | 30 kg | 15985 | 1 | 540 | - |

# Multi-action 250-g tablet

These new codes only affect new formulas with low boric (European legislation)

## DESCRIPTION

Slow-dissolving, 250-g tablet that acts as an algicide, bactericide and flocculant.

| | Format | Code | Standard Pack | Standard weight in kg | Standard volume in m³ |
|---|---|---|---|---|---|
| Square packaging | 1 kg | 75159 | 18 | 540 | - |
| Square packaging | 5 kg | 75160 | 4 | 720 | - |
| | 25 kg | 75161 | 1 | 450 | - |

# Special multi-purpose tablet

## for hard water

These new codes only affect new formulas with low boric (European legislation)

## DESCRIPTION

Solid compound in tablet form, specially formulated so that a single dose will remove bacterias, viruses and microorganisms from pool water, which prevents algae from growing, limescale from forming and keeps the water crystal clear.

| | Format | Code | Standard Pack | Standard weight in kg | Standard volume in m³ |
|---|---|---|---|---|---|
| | 5 kg | 75154 | 4 | 720 | - |
| | 25 kg | 75155 | 1 | 450 | - |

For minimum amounts, ask your dealer

POOL CHEMICALS DISINFECTANTS

# Bromine tablets

## DESCRIPTION

Slow-dissolving 20-g bromine tablets for the continuous disinfection of pools and spas. Does not smell of chlorine. High tolerance to pH levels. Powerful disinfectant and oxidising agent.

| Format | Code | Standard Pack | Standard weight in kg | Standard volume in m³ |
|---|---|---|---|---|
| 5 kg | 16550 | 4 | 400 | - |
| 20 kg | 28740 | 1 | 540 | - |

# Chlorine stabilizer

## DESCRIPTION

Prevents the rapid breakdown of chlorine by the sun's UV rays.

| Format | Code | Standard Pack | Standard weight in kg | Standard volume in m³ |
|---|---|---|---|---|
| 4,5 kg | 72812 | 4 | 648 | - |

# Chlorine and bromine neutralizer

## DESCRIPTION

For the removal of excess residual chlorine or bromine.

| Format | Code | Standard Pack | Standard weight in kg | Standard volume in m³ |
|---|---|---|---|---|
| 6 kg | 16578 | 4 | 864 | - |

POOL CHEMICALS ALGICIDES

# Algicide

## DESCRIPTION

Prevents the formation of algae in pools.

| Format | Code | Standard Pack | Standard weight in kg | Standard volume in m³ |
|---|---|---|---|---|
| 5 l | 11417 | 1 | 640 | - |
| 25 l | 11418 | 1 | 600 | - |

For minimum amounts, ask your dealer

POOL CHEMICALS ALGICIDES

# Algicide with brightener

## DESCRIPTION

A powerful bactericide, algicide and fungicide.

| Format | Code | Standard Pack | Standard weight in kg | Standard volume in m³ |
|---|---|---|---|---|
| 5 l | 11414 | 4 | 640 | - |
| 25 l | 11415 | 1 | 600 | - |

# Algicide Extra

## DESCRIPTION

Highly efficient non-foaming algicide that also acts as a flocculant.

| Format | Code | Standard Pack | Standard weight in kg | Standard volume in m³ |
|---|---|---|---|---|
| 5 l | 11423 | 4 | 640 | - |
| 25 l | 11424 | 1 | 600 | - |



For minimum amounts, ask your dealer

More power in each drop!

Concentrated product: 25 weeks (1 l)

# Algicide Power

## DESCRIPTION

A fast-acting compound formulated from surfactants that displays great properties as an algicide and fungicide, which therefore prevents the formation and growth of algae in pool water.

**Prevention is better than cure:**

Concentrated maintenance product that keeps pools free of all types of algae thanks to its powerful properties.

The revolutionary dosing cap will enable you to add exactly the amount of the product you need, thus helping you to make savings and use it more efficiently.

| Format | Code | Standard Pack | Standard weight in kg | Standard volume in m³ |
|---|---|---|---|---|
| 1 l | 63124 | 12 | 480 | - |

# Algicide Power Plus

**Non-foaming.**

**Concentrated product: 20 weeks (1 l)**

## DESCRIPTION

An extra strong, fast-acting algicide with micro-flocculant properties that makes it better able to prevent the appearance of algae that live suspended in the water. Non-foaming.

Concentrated maintenance product that keeps pools free of all types of algae thanks to its powerful properties.

The revolutionary dosing cap will enable you to add exactly the amount of the product you need, thus helping you to make savings and use it more efficiently.

| Format | Code | Standard Pack | Standard weight in kg | Standard volume in $m^3$ |
|---|---|---|---|---|
| 1 l | 63126 | 12 | 480 | - |

# AlgiStop

## DESCRIPTION

Antialgae concentrated recovery, removes all kinds of algae, even black. Fast-acting, recommended even for liner and polyester pools (does not stain).

| Format | Code | Standard Pack | Standard weight in kg | Standard volume in $m^3$ |
|---|---|---|---|---|
| 1 l | 72824 | 5 l | 640 | - |

# Algistop 0% Cooper

## DESCRIPTION

Algae destroyer without Cooper. Removes all type of algae. Special for liner pools.

- Fast working.
- It does not damage the surfaces.

| Format | Code | Standard Pack | Standard weight in kg | Standard volume in $m^3$ |
|---|---|---|---|---|
| 1 kg | 76791 | 20 | - | - |

POOL CHEMICALS FLOCCULANTS

# Natural Flocculant

**The natural way to make water clean and transparent.**

**Concentrated product: 25 weeks (1 l)**

* 40 ml a week for a 50 m³ pool.

## DESCRIPTION

This natural clarifier made from chitosan (crustacean shells) is the most effective weekly treatment for preventing the formation of foam and cloudiness in pool water. It removes all traces of body oils and lotions, as well as excess metal precipitates.

Suitable for use in all types of pools and filters.

- Keeps water crystal clear, which helps the filter collect dirt.
- Removes excess metal precipitates.
- Helps make cleaning filters quicker and easier.
- Improves the performance of salt chlorinators.

**Recommended use:**

To keep your pool water crystal clear, treat it with the recommended dose of Natural Flocculant once a week. For home pools that are used a lot or for public pools, treat the pool water with twice or three times the recommended dose.

| Format | Code | Standard Pack | Standard weight in kg | Standard volume in m³ |
|---|---|---|---|---|
| 1 l | 65956 | 12 | 480 | - |

# CrystalBlock - Single dose gel flocculant

## DESCRIPTION

The easiest way to enjoy crystal clear water. No handling or complicated dosing systems required. It has never been easier to enjoy crystal clear water. Ideal for all pool types, except ones with cartridge or diatomaceous earth filters.

The single dose gel blocks will enable you to add the exact amount of the product with next to no effort. CrystalBlock collects colloidal particles and algae spores so that they are filtered better.

- Increases filter efficiency.
- Helps keep your pool water crystal clear.
- Improves the efficiency of disinfectants.

| Format | Code | Standard Pack | Standard weight in kg | Standard volume in m³ |
|---|---|---|---|---|
| 36 UN | 67558 | 72 | 10.800 | - |

# Liquid flocculant

## DESCRIPTION

Clarifies water by eliminating the colloidal particles that cause cloudiness in water.

| Format | Code | Standard Pack | Standard weight in kg | Standard volume in m³ |
|---|---|---|---|---|
| 5 l | 11388 | 4 | 640 | - |
| 25 l | 11389 | 1 | 600 | - |

For minimum amounts, ask your dealer

POOL CHEMICALS FLOCCULANTS

# Solid flocculant

## DESCRIPTION

Long-lasting improvement of water transparency through permanent flocculation.

| Format | Code | Standard Pack | Standard weight in kg | Standard volume in m³ |
|---|---|---|---|---|
| 1 kg of product in 8 bags1 kg (8 x 125 g) (8 bags of 125 g each) | 11390 | 14 | 490 | - |

# Claritab Plus

## DESCRIPTION

Super concentrated dual action coagulant and flocculant tablets, specially formulated to obtain the best performance from sand filters. The slow dissolving and controlled action completely removes suspended particles in the water (metal ions, organic matter, etc.). Savings are made as fewer disinfectants are used.

| Format | | Code | Standard Pack | Standard weight in kg | Standard volume in m³ |
|---|---|---|---|---|---|
| Display 20 units | Unit: 5 x 20 g | 72769 | 20 | 144 | - |

POOL CHEMICALS CLEANERS

# Surface cleaner

## DESCRIPTION

Extra strong descaler. Acid.

| Format | Code | Standard Pack | Standard weight in kg | Standard volume in m³ |
|---|---|---|---|---|
| 5 l | 11391 | 4 | 640 | - |
| 25 l | 11392 | 1 | 600 | - |

# Surface cleaner

## for polyester and fibreglass pools

## DESCRIPTION

It combats limescale and grease without damaging pool lining.

| Format | Code | Standard Pack | Standard weight in kg | Standard volume in m³ |
|---|---|---|---|---|
| 5 l | 16558 | 4 | 640 | - |

# Gelamin

## DESCRIPTION

Gel descaler for pool walls and floors. Highly effective. Easy to use.

| Format | Code | Standard Pack | Standard weight in kg | Standard volume in m³ |
|---|---|---|---|---|
| 5 l | 15987 | 4 | 640 | - |

# Water line degreaser

## Non-foaming

## DESCRIPTION

A specially formulated compound for removing scum and dirt from pool edges and walls, and areas around them that may require cleaning.

| Format | Code | Standard Pack | Standard weight in kg | Standard volume in m³ |
|---|---|---|---|---|
| 5 l | 11426 | 4 | 640 | - |
| 25 l | 11427 | 1 | 600 | - |

# Netoline

## Water line

## DESCRIPTION

Powerful liquid descaler with degreasing properties for cleaning the water line.

| Format | Code | Standard Pack | Standard weight in kg | Standard volume in m³ |
|---|---|---|---|---|
| 1 l | 40931 | 12 | 480 | - |
| 5 l | 40932 | 4 | 640 | - |
| 25 l | 40934 | 1 | 600 | - |

# Liquid Filnet

## DESCRIPTION

Liquid descaler specially designed for cleaning the inside of sand filters in public pools.

| Format | Code | Standard Pack | Standard weight in kg | Standard volume in m³ |
|---|---|---|---|---|
| 5 l | 73557 | 4 | 640 | - |
| 25 l | 73558 | 1 | 600 | - |

For minimum amounts, ask your dealer

# Solid Filnet

## DESCRIPTION

A solid descaler for cleaning the inside of sand filters.

| Format | Code | Standard Pack | Standard weight in kg | Standard volume in m³ |
|---|---|---|---|---|
| 1 kg | 15988 | 18 | 600 | - |

# Step 1 Polisher

## DESCRIPTION

Stainless steel polisher and rust remover.

| Format | Code | Standard Pack | Standard weight in kg | Standard volume in m³ |
|---|---|---|---|---|
| 750 ml | 72847 | 12 | 576 | - |

# Step 2 Brightener

## DESCRIPTION

Product designed to care and polish stainless steel.

| Format | Code | Standard Pack | Standard weight in kg | Standard volume in m³ |
|---|---|---|---|---|
| 750 ml | 72848 | 12 | 576 | - |

# Stainless steel cleaner-polish

## DESCRIPTION

Stainless steel cleaner-polish. It removes stains and degreases all types of stainless steel surfaces.

| Format | Code | Standard Pack | Standard weight in kg | Standard volume in m³ |
|---|---|---|---|---|
| 1 l | 72845* | 12 | 480 | - |
| 5 l | 72846* | 4 | 640 | - |

* New codes replace old codes 18713 and 16630.

POOL CHEMICALS CLEANERS

# Surf-Clean

## DESCRIPTION

Surface sanitizer with a pleasant pine smell for all kinds of surfaces.

| Format | Code | Standard Pack | Standard weight in kg | Standard volume in m³ |
|---|---|---|---|---|
| 1 l | 73666 | 9 | 432 | - |
| 5 l | 73667 | 4 | 640 | - |
| 25 l | 73668 | 1 | 600 | - |

# Descaler

## DESCRIPTION

Prevents limescale.

| Format | Code | Standard Pack | Standard weight in kg | Standard volume in m³ |
|---|---|---|---|---|
| 5 l | 11431 | 4 | 640 | - |

# Super descaler

## DESCRIPTION

Highly efficient descaler. Prevents the precipitation of lime and the build-up of limescale. Prevents pipes from getting blocked.

| Format | Code | Standard Pack | Standard weight in kg | Standard volume in m³ |
|---|---|---|---|---|
| 5 l | 16555 | 4 | 640 | - |

For minimum amounts, ask your dealer

POOL CHEMICALS CLEANERS

# Winterizer

## DESCRIPTION

Prevents the proliferation of algae and bacteria in the water. Prevents water from going stagnant and the build-up of limescale. Takes the strain out of spring cleaning. Non-foaming.

| Format | Code | Standard Pack | Standard weight in kg | Standard volume in m³ |
|---|---|---|---|---|
| 5 l | 11430 | 4 | 640 | - |

POOL CHEMICAL KITS

# KIT-Splash

## DESCRIPTION

Children's pool maintenance kit. It contains 0.5 l of dichlor granules and 0.5 l of concentrated algicide.

| Format | Code | Standard Pack | Standard weight in kg | Standard volume in m³ |
|---|---|---|---|---|
| Kit | 15986 | 14 | 294 | - |

POOL CHEMICALS WINTERISING PRODUCTS

# Winterizer copper free

## DESCRIPTION

Prevents water putrefaction and slows the growth of algae and bacteria. Compatible with all treatments. Including the PHMB.

| Format | Code | Standard Pack | Standard weight in kg | Standard volume in m³ |
|---|---|---|---|---|
| 5 l | 16553 | 4 | 640 | - |

For minimum amounts, ask your dealer



# Winterizer Power

**More power in each drop!**

**Concentrated product: 0.5 L / 40 - 50 m³**

## DESCRIPTION

Concentrated winterizer specially formulated for liner and polyester pools that will enable you to keep your pool water in top condition during winter as it prevents the formation of algae and bacteria. Saves water as it can be used from one season to the next.

The revolutionary dosing cap will enable you to add exactly the amount of the product you need, thus helping you to make savings and use it more efficiently.

At the end of the bathing season before ending regular maintenance treatment, a super-chlorination should be performed using dichlor granules.

It is advisable to repeat the process halfway through the winter season.

| Format | Code | Standard Pack | Standard weight in kg | Standard volume in m³ |
|---|---|---|---|---|
| 1 l | 63165 | 12 | 480 | - |



# Inverlong

**These new codes only affect new formulas with low boric (European legislation)**

## DESCRIPTION

Full treatment for pools in winter. Prevents the water from going stagnant and the proliferation of algae. Keeps the water crystal clear. Acts as a bactericide, algicide and flocculant. Comes with a floating dispenser.

| Format | Code | Standard Pack | Standard weight in kg | Standard volume in m³ |
|---|---|---|---|---|
| 1.75 kg | 75151 | 8 | 128 | - |

# AstralPool SPA Collection

## pH Minus

### DESCRIPTION

Granulated product to reduce the pH of the spa water. Fast dissolution without residues

| Format | Code | Standard Pack | Standard weight in kg | Standard volume in m³ |
|---|---|---|---|---|
| 1 kg | 76685 | 9 | 324 | - |

# AstralPool SPA Collection

## pH Plus

### DESCRIPTION

Granulated product to increase the pH of the spa water. Fast dissolution without residues.

| Format | Code | Standard Pack | Standard weight in kg | Standard volume in m³ |
|---|---|---|---|---|
| 1 kg | 76686 | 9 | 324 | - |

# AstralPool SPA Collection

## Hardness Stabilizer

### DESCRIPTION

Liquid to prevent limescale. Prevents stains and save water from becoming cloudy.

| Format | Code | Standard Pack | Standard weight in kg | Standard volume in m³ |
|---|---|---|---|---|
| 1 kg | 76687 | 9 | 324 | - |

# AstralPool SPA Collection

## Bromine Tablets

### DESCRIPTION

Bromine tablets for water disinfection without smell and with a long-lasting effect

| Format | Code | Standard Pack | Standard weight in kg | Standard volume in m³ |
|---|---|---|---|---|
| 1 kg | 76688 | 9 | 324 | - |

# AstralPool SPA Collection

## Granulate chlorine

### DESCRIPTION

Chlorine granules to disinfect and guarantee hygienic spa water.

| Format | Code | Standard Pack | Standard weight in kg | Standard volume in m³ |
|---|---|---|---|---|
| 1 kg | 76689 | 9 | 324 | - |

# AstralPool SPA Collection

## Clarifyer

### DESCRIPTION

Concentrated liquid to prevent cloudy water problems in the spa. For all types of filters

| Format | Code | Standard Pack | Standard weight in kg | Standard volume in m³ |
|---|---|---|---|---|
| 1 kg | 76690 | 9 | 324 | - |

# AstralPool SPA Collection

## Anti Foam

### DESCRIPTION

Liquid to remove spa foam. Fast and effective action.

| Format | Code | Standard Pack | Standard weight in kg | Standard volume in m³ |
|---|---|---|---|---|
| 1 kg | 76691 | 9 | 324 | - |

# AstralPool SPA Collection

## Filter Cleaner

### DESCRIPTION

Liquid for cleaning cartridge filters.

| Format | Code | Standard Pack | Standard weight in kg | Standard volume in m³ |
|---|---|---|---|---|
| 1 kg | 76692 | 9 | 324 | - |

# AstralPool SPA Collection

## Surface Cleaner

### DESCRIPTION

Concentrated liquid for cleaning the interior lining of spas. For all types of surfaces.

| Format | Code | Standard Pack | Standard weight in kg | Standard volume in m³ |
|---|---|---|---|---|
| 1 kg | 76693 | 9 | 324 | - |

# AstralPool SPA Collection

## Pipework Cleaner

### DESCRIPTION

Liquid to degrease and clean hydraulic circuit.

| Format | Code | Standard Pack | Standard weight in kg | Standard volume in m³ |
|---|---|---|---|---|
| 1 kg | 76694 | 9 | 324 | - |

# AstralPool SPA Collection

## Kit Bromine

### DESCRIPTION

Kit for the disinfection of spa water with bromine

| Format | Code | Standard Pack | Standard weight in kg | Standard volume in m³ |
|---|---|---|---|---|
| 1 kg | 76695 | 72 | 288 | - |

# AstralPool SPA Collection

## Test Strip

### DESCRIPTION

Strips to determine the pH value, chlorine, bromine, alkalinity and hardness of the spa water.

| Format | Code | Standard Pack | Standard weight in kg | Standard volume in m³ |
|---|---|---|---|---|
| - | 76764 | - | - | - |

# AstralPool 7 - in 1

## Test Strips

### DESCRIPTION

Quick and easy test for Free chlorine, total chlorine (total bromine), pH, total alkalinity, total hardness i cyanuric acid. Each pack contains 50 test strips

| Format | Code | Standard Pack | Standard weight in kg | Standard volume in m³ |
|---|---|---|---|---|
| - | 45198 | - | - | - |

# AstralPool 6 - in 1

## Test Strips

### DESCRIPTION

Quick and easy test for Free chlorine or bromine, pH, total alkalinity, cyanuric acid and total hardness. Each pack contains 50 test strips

| Format | Code | Standard Pack | Standard weight in kg | Standard volume in m³ |
|---|---|---|---|---|
| - | 76679 | - | - | - |

# AstralPool 3 - in 1

## Test Strips

### DESCRIPTION

Quick and easy test for Free chlorine, alkalinity and pH. Each pack conatins 50 test strips

| Format | Code | Standard Pack | Standard weight in kg | Standard volume in m³ |
|---|---|---|---|---|
| - | 41925 | - | - | - |

# AstralPool SPA Collection 6 - in 1

## Test Strips

### DESCRIPTION

Strips to determine the pH value, chlorine, bromine, alkalinity and hardness of the spa water.

| Code | Standard Pack | Standard weight in kg | Standard volume in m³ |
|---|---|---|---|
| 76764 | - | - | - |

# Total chlorine and pH

## comparison test kit

### DESCRIPTION

Comes in a modern, practical design. Packaged in a blue plastic box. Comes with OTO and liquid phenol.

| | Code | Standard Pack | Standard weight in kg | Standard volume in m³ |
|---|---|---|---|---|
| | 25353 | 25 | 4.8 | 0.019 |

# Chlorine, bromine and pH

## comparison test kit

### DESCRIPTION

Comes in a modern, practical design. Packaged in a blue plastic box. Comes with phenol and DPD tablets.

| | Code | Standard Pack | Standard weight in kg | Standard volume in m³ |
|---|---|---|---|---|
| | 26155 | 25 | 4.8 | 0.019 |

# Liquid active oxygen tester

### DESCRIPTION

For testing the residual liquid active oxygen in the water.

| | Code | Standard Pack | Standard weight in kg | Standard volume in m³ |
|---|---|---|---|---|
| | 26082 | 1 | 15.4 | 0.0265 |

28050

28051

16623

16610

# Reagent refills

| | Format | Code | Standard Pack | Standard weight in kg | Standard volume in m³ |
|---|---|---|---|---|---|
| OTO refill | 15 cm³ | 28050 | 50 | 2.1 | 0.020 |
| Phenol refill | 15 cm³ | 28051 | 50 | 2.1 | 0.020 |
| OTO refill | 250 cm³ | 16623 | 20 | 5.5 | 0.010 |
| Phenol refill | 250 cm³ | 16624 | 20 | 5.5 | 0.010 |
| 1 OTO and 1 phenol refill | 15 cm³ | 16610 | 50 | 3.5 | 0.020 |

# 3-in-1 test strips: MPS

## DESCRIPTION

Tests for potassium monopersulphate, pH and total alkalinity. Each pack contains 50 strips.

| Code | Standard Pack | Standard weight in kg | Standard volume in m³ |
|---|---|---|---|
| 57500 | - | - | - |

# 4-in-1 test strips: free chlorine

## DESCRIPTION

Quick and easy test for free chlorine, pH and total alkalinity in pools treated with chlorine. Each pack contains 50 strips.

| Code | Standard Pack | Standard weight in kg | Standard volume in m³ |
|---|---|---|---|
| 11732 | - | - | - |

# 4-in-1 test strips: bromine

## DESCRIPTION

Quick and easy test for bromine, pH and total alkalinity in pools treated with bromine. Each pack contains 50 strips.

| Code | Standard Pack | Standard weight in kg | Standard volume in m³ |
|---|---|---|---|
| 52577 | - | - | - |

# Salt test kit

## DESCRIPTION

Salt test strips for checking salt levels. Salt levels must be checked on a regular basis as the water is renewed.

| Code | Standard Pack | Standard weight in kg | Standard volume in m³ |
|---|---|---|---|
| 07937 | - | - | - |

# TruTest test strips

## DESCRIPTION

50 TruTest 3-in-1 test strips (test for free chlorine and bromine, pH and total alkalinity).

| Code | Standard Pack | Standard weight in kg | Standard volume in m³ |
|---|---|---|---|
| 40817 | - | - | - |

Until end of stocks.

# Reagent refills

## DESCRIPTION

1 OTO and 1 phenol refill.

| | Code | Standard Pack | Standard weight in kg | Standard volume in m³ |
|---|---|---|---|---|
| | 38638 | 144 | 8 | 0.037 |

# Basic pH and chlorine test kit

## Basic Line

## DESCRIPTION

With OTO and phenol.

| | Code | Standard Pack | Standard weight in kg | Standard volume in m³ |
|---|---|---|---|---|
| | 38637 | 48 | 8 | 0.054 |

# Reagent Refills

## for Photometers

## DESCRIPTION

Photometer reagent refills for PC Checkit, Checkit Direct, MD100, MD200, MD110, PoolDirect, PC Multidirect and Scuba II. reagent tablets

| | | Code | Standard Pack | Standard weight in kg | Standard volume in m³ |
|---|---|---|---|---|---|
| **Reagent Refills** | | | | | |
| DPD Nº1 | 250 un. | 03009 | 1 | 0.1 | 0.04 |
| DPD Nº1 | 100 un. | 08447 | - | - | - |
| DPD Nº3 | 250 un. | 03014 | 1 | 0.1 | 0.04 |
| DPD Nº3 | 100 un. | 08448 | - | - | - |
| DPD Nº1 High calcium | 100 un. | 32082 | - | - | - |
| DPD Nº4 (=DPD-1+DPD-3) | 100 un. | 08449 | - | - | - |
| DPD Nº4 (=DPD-1+DPD-3) | 200 un. | 08450 | - | - | - |
| DPD Nº1 for MD-100 and MD-200 Cl range 0-10 ppm | 100 un. | 52634 | - | - | - |
| DPD Nº3 for MD-100 and MD-200 Cl range 0-10 ppm | 100 un. | 52635 | - | - | - |
| Phenol RED | 250 un. | 03019 | 1 | 0.1 | 0.04 |
| Phenol RED | 100 un. | 08372 | - | - | - |
| Alkalinity-M Total | 100 un. | 08374 | - | - | - |
| Alkalinity-M Total | 250 un. | 08373 | - | - | - |
| Calcium-H Nº1 + Calcium-H Nº2 | 100 + 100 | 45213 | - | - | - |
| Calcium Hardness for PC Checkit | 100 un. | 08389 | - | - | - |
| Cyanuric acid for Minikit and photometers | 100 un. | 08451 | - | - | - |
| Cyanuric acid for Minikit and photometers | 250 un. | 08345 | 1 | 0.1 | 0.04 |
| MPS-Out to determine combined chlorine when using CTX-23 Cloramin Chock | 250 un. | 08679 | 1 | 0.1 | 0.04 |
| Other reagents | | Consult | | | |

# Free chlorine and pH Pooltester

| | Code | Standard Pack | Standard weight in kg | Standard volume in m³ |
|---|---|---|---|---|
| Chlorine range: 0.1-3.0 mg/l<br>pH range: 6.8-8.2 | 03253 | 12 | 2.2 | 0.007 |
| Chlorine range: 0.5-6.0 mg/l<br>ph range: 6.8-8.2 | 01419 | 12 | 2.2 | 0.007 |

# Oxygen and pH Pooltester

| | Code | Standard Pack | Standard weight in kg | Standard volume in m³ |
|---|---|---|---|---|
| | 03182 | 12 | 2.2 | 0.007 |

# Bromine and pH Pooltester

| | Code | Standard Pack | Standard weight in kg | Standard volume in m³ |
|---|---|---|---|---|
| | 16374 | 12 | 2.2 | 0.007 |

# Copper test kit

| | Code | Standard Pack | Standard weight in kg | Standard volume in m³ |
|---|---|---|---|---|
| | 03258 | 1 | 0.2 | 0.004 |

# Pooltester refill blister pack

## DESCRIPTION

20 DPD-1 tablets and 20 red phenol tablets.

| | Code | Standard Pack | Standard weight in kg | Standard volume in m³ |
|---|---|---|---|---|
| | 18854 | 30 | 1.4 | 0.010 |

# Analysis accessories

| | Code | Standard Pack | Standard weight in kg | Standard volume in m³ |
|---|---|---|---|---|
| Round cuvettes 10 mL D 24 mm for Checkit Direct, MD100, MD110, MD200 and PoolDirect photometers | 19029 | 12 | - | - |
| Plastic stirring rod 13 cm long | 08432 | 50 | - | - |

# SD Series Portable Meters

## DESCRIPTION

It consists of a series of easy-to-use and portable devices for the precise measurement of different parameters. With the robust and waterproof casing (IP67), these equipments are the ideal solution for on-site testing of swimming pools and spas. The intuitive scroll function and backlit display allow for easy measurement and simultaneous display of results. The memory for 25 data sets, in each case with date and time, allows the recording of the main parameters with ease.

- Scroll function.
- Compact and robust.
- Screen backlight.
- Waterproof (IP67).

| | Code | Standard Pack | Standard weight in kg | Standard volume in m³ |
|---|---|---|---|---|
| Portable Meter SD 50 pH | 68110 | 1 | - | - |
| Portable Meter SD 60 ORP | 68064 | 1 | - | - |
| Portable Meter SD 90 SALT | 68066 | 1 | - | - |

| Parameter | SD 50 pH | SD 60 ORP | SD 90 SALT |
|---|---|---|---|
| Measuring Range | 0-60 ºC, 0-14 pH | 0-60 °C, 1800 ~1800 mV | 0-60 °C, < 20.00 ppt (2.00%) |
| Resolution | 0.01 pH | 0.01 mV (up to ± 1000 mV)<br>1 mV more than ± 1000 mV) | 0.01 in measuring range<br>% 1 ppm (< 2000 ppm)<br>0.01 ppt (2.0 – 20.00 ppt) |
| Precision | +/- 0.05 pH | ± 20 mV | +/- 3% FS |
| Automatic conversion | - | - | ppm: 0 – 999 ppt: 2.00 – 20.00 |
| Temperature resolution | 0.1 °C; Precision: ± 1°C, °C/°F system seleccionable | 0.1 °C; Precision: ± 1°C, °C/°F system seleccionable | 0.1 °C; Precision: ± 1°C, °C/°F system seleccionable |
| Adjustment | 1, 2 or 3 points by automatic model | Adjustment in 1 point ± 150 mV value ORP selectable | Adjustment till 2 points for manual model ± 50% about indicated value |
| Temperature compensation | Automatic | Automatic | Automatic |
| Memory | For 25 data sets (permanent) | For 25 data sets (permanent) | For 25 data sets (permanent) |
| Screen | 22 * 22 mm LCD | 22 * 22 mm LCD | 22 * 22 mm LCD |
| Power | 2 batteries AAA | 2 batteries AAA | 2 batteries AAA |
| Battery | > 25 hours | > 25 hours | > 25 hours |
| Disconnection | After 8 min | After 20 min | After 8 min |

**Compatible con cualquier reactivo para fotómetro marca Lovibond**

# Scuba II: Portable photometer for private pools

## DESCRIPTION

Electronic pool tester to measure Total Alkalinity, Total residual Bromine, Free, Combined and Total residual Chlorine, Cya stabilizer and pH. It uses the same technology used in public swimming pools, which does not require visual color comparison, which can imply reading inaccuracies. The water sample is examined according to the photometric principle and indicated on the digital display with better determination accuracy. Scuba has an attractive, modern and naturally waterproof casing.

These products comply with the UNE-ISO 17381:2012

Water quality standard. Selection and application of methods using ready-to-use test kits in water analysis.

Ideal for the daily analysis of the water of all types of residential pools and spas.

Ergonomic, waterproof, robust and floating casing.

Larger digital display for easy viewing.

Compatibility with all Lovibond photometer reagents. New OTZ (One Time Zero) function that makes it necessary to calibrate the device only the first time it is used to measure the values of the same pool. For other pools, only a new sample and the specific reagents will be necessary.

**Tips for use:** Carefully follow the instructions that come with the equipment to analyze any parameter. Cuvettes should be thoroughly cleaned and rinsed after each determination. You should always carry out the analysis with dry hands.

| | Code | Standard Pack | Standard weight in kg | Standard volume in m³ |
|---|---|---|---|---|
| Scuba II<br>AlKalinity 0 - 300 ppm<br>Cys 1 - 160 ppm<br>Bromine 0,2-13,5 ppm<br>Free Chlorine 0,1 - 6 ppm<br>Total Chlorine 0,1 - 6 ppm<br>pH 6,5 - 8,4 | 68073 | - | - | - |

+ Turbidity measurement is an important parameter to determine the effectiveness of flocculation and filtration. Turbidity is measured in FNU units (Formazin Nephelometric Units), identical to NTUs (Nephelometric Turbidity Units). Compact instrument for measuring the turbidity of water, fast and accurate analysis. It is measured according to the EN/ISO 7027 standard with scattered light at an angle of 90º. This product complies with the UNE-ISO 17381 standard.

## ADVANTAGES

+ Measurement range from 0.01 to 1100 NTU.
+ Measurements with infrared light at an angle of 90º.
+ Turbidity analysis in color test.
+ Comfortable handling.
+ Comfortable handling for 600 measurements without changing batteries.

# TB 211 IR Turbidimeter

## DESCRIPTION

TB 211 IR is an instrument that measures turbidity using infrared. The measurement range is from 0.01-1100 NTU. This product complies with the UNE-ISO 17381 standard. Ideal for public swimming pools. Measurement cycle of 8 seconds. It has a high resolution and precision of the measurements.

- Optical with temperature compensation and photosensor amplifier in waterproof measurement compartment.
- Memory for max. 1000 data fields.
- USB cable included for direct data transfer to a PC.

Advice for use: Scrupulously follow the instructions that come with the equipment. Cuvettes should be thoroughly cleaned and rinsed after each determination. You should always carry out the analysis with dry hands.

| | Code | Standard Pack | Standard weight in kg | Standard volume in m³ |
|---|---|---|---|---|
| | 72689 | 1 | - | - |

# MD-100 and MD-110 Photometers

## DESCRIPTION

Fast and accurate multiparameter photometers for public pools MD-100 and MD110 (bluetooth interface) in pocket format.

- Waterproof (analog IP 68, 1 hour at 0.1 meters).
- Calibration operation indicator.
- Scroll Memory.
- Illuminated screen.
- Automatic disconnection.
- Real time clock and date.
- Suitability of measurement and test equipment.
- The zero value will be memorized (One Time Zero - OTZ).
- Tips for use: After turning on the device, the last method that had been chosen before the device was turned off will automatically be displayed. Scrupulously follow the instructions that come with the equipment. Cuvettes should be thoroughly cleaned and rinsed after each determination. You should always carry out the analysis with dry hands.

| | Code | Standard Pack | Standard weight in kg | Standard volume in m³ |
|---|---|---|---|---|
| MD100 2-in-1 Photometer | 52629 | 1 | - | - |
| MD100 3-in-1 Photometer | 52630 | 1 | - | - |
| MD100 5 in 1 Photometer | 52632 | 1 | - | - |
| MD100 6 in 1 Photometer | 52633 | 1 | - | - |
| MD110 3-in-1 Photometer | 68070 | 1 | - | - |
| Photometer MD110 4 in 1 | 68071 | 1 | - | - |
| Photometer MD110 6 in 1 | 68072 | 1 | - | - |

# MD200 photometers

## DESCRIPTION

Fast and accurate MD-200 multiparameter photometers for public pools.

- Waterproof (analog IP 68, 1 hour at 0.1 meters).
- Calibration operation indicator.
- Scroll Memory.
- Illuminated screen.
- Automatic disconnection.
- Real time clock and date.
- Suitability of measurement and test equipment.
- The zero value will be memorized (One Time Zero - OTZ).
- Chlorine range: 0.05 - 6.0 mg/l
- pH range: 6.5 - 8.4
- Cyanuric acid range: 0 - 80.0 mg/l
- Alkalinity range: 5 - 200 mg/l (only MD200 5 in 1 and MD200 6 in 1)
- Calcium hardness range: 50 - 500 mg/l (only MD200 5 in 1 and MD200 6 in 1)
- Bromine range: 0.05 - 13 mg/l (MD200 6 in 1 only)

| | Code | Standard Pack | Standard weight in kg | Standard volume in m³ |
|---|---|---|---|---|
| MD200 3-in-1 Photometer | 54567 | 1 | 1,0 | 0,049 |
| MD200 5 in 1 Photometer | 54568 | 1 | 1,0 | 0,049 |
| MD200 6 in 1 Photometer | 55152 | 1 | 1,0 | 0,049 |

# Reagent Refills

## for photometers

### DESCRIPTION

Reagent refills for PoolDirect, PC Multidirect, PM600 and PM630 photometers.

| | Format | Code | Standard Pack | Standard weight in kg | Standard volume in m³ |
|---|---|---|---|---|---|
| **Reagent tablets** | | | | | |
| Aluminum Nº. 1. Range 0.01-0.25 ppm | 100 un. | 08324 | - | - | |
| Aluminum Nº. 2. Range 0.01-0.25 ppm | 100 un. | 08326 | - | - | |
| Ammonium Nº. 1. Range 0.02-1 ppm | 100 un. | 08328 | - | - | - |
| Ammonium Nº. 2. Range 0.02-1 ppm | 100 un. | 08330 | - | - | - |
| Boron Combi pack Boron Nº1/Nº2 X 100. Range 0.1-2 ppm | 100 un. | 45239 | - | - | - |
| Copper No. 1. meas range 0.05-5 ppm | 100 un. | 08360 | - | - | |
| Copper No. 2. meas range 0.05-5 ppm | 100 un. | 08362 | - | - | |
| DPD--1 + GLYCINE. Dioxide Chlorine Range: 0.05 - 1 ppm | 100 un. | 45243 | - | - | - |
| Total hardness. Range 2-50 ppm | 100 un. | 08391 | - | - | - |
| Phosphate LR Combi pack Phosphate LR Nº. 1/Nº. 2 X 100. Range 0.05-4 ppm | 100 un. | 45260 | - | - | - |
| LR iron. Range 0.02-1 ppm | 100 un. | 08336 | - | - | - |
| Sulfate. Range 5-100 ppm | 250 un. | 08424 | - | - | - |
| Urea Combi pack Ammonium Nº. 1/Nº. 2 X 100. Range 0.1-3 ppm | 100 un. | 45228 | - | - | - |
| PHMB photometer Range 2-60 ppm | 100 un. | 32100 | - | - | - |

# Photometer reagents

### DESCRIPTION

Reagents for Pooltest 3, Pooltest 4, Pooltest 6 and Lumiso Pooltest 3, Lumiso Pooltest 4 and Lumiso Pooltest 6 photometers.

| | Code | Standard Pack | Standard weight in kg | Standard volume in m³ |
|---|---|---|---|---|
| Reagent tablets | | | | |
| Phenol (pH) 250 units. | 41918 | 1 | 0,1 | 0,004 |
| DPD 1 250 units. | 41919 | 1 | 0,1 | 0,004 |
| DPD 2 250 units. | 43409 | 1 | 0,1 | 0,004 |
| DPD 3 250 units. | 41917 | 1 | 0,1 | 0,004 |
| Isocyanuric acid 250 uni. | 41921 | 1 | 0,1 | 0,004 |
| Alkalinity 250 units. | 43410 | 1 | 0,1 | 0,004 |
| Hardness 250 units. | 49676 | 1 | 0,1 | 0,004 |

Other reagents: Consult

# 3-in-1 photometer PC test kit

## DESCRIPTION

- Chlorine range: 0.05–6.0 mg/l
- ph range: 6.5–8.4
- Cyanuric acid range: 0–80.0 mg/l

| | Code | Standard Pack | Standard weight in kg | Standard volume in m³ |
|---|---|---|---|---|
| | 54567 | 1 | 1.0 | 0.049 |

# 5-in-1 photometer PC test kit

## DESCRIPTION

- Chlorine range: 0.05–6.0 mg/l
- ph range: 6.5–8.4
- Cyanuric acid range: 0–80.0 mg/l
- Alkalinity range: 5–200 mg/l
- Calcium hardness range: 50–500 mg/l

| | Code | Standard Pack | Standard weight in kg | Standard volume in m³ |
|---|---|---|---|---|
| | 54568 | 1 | 1.0 | 0.049 |

# Photometer reagents

03009

| | Format | Code | Standard Pack | Standard weight in kg | Standard volume in m³ |
|---|---|---|---|---|---|
| Phenol reagent tablets (pH) | 250 units | 03019 | 1 | 0.1 | 0.004 |
| DPD-1 reagent tablets | 250 units | 03009 | 1 | 0.1 | 0.004 |
| DPD-3 reagent tablets | 250 units | 03014 | 1 | 0.1 | 0.004 |
| MPS-OUT reagent tablets (test for the amount of chlorine in the presence of Oximines) | 250 units | 08679 | 1 | 0.1 | 0.004 |
| Isocyanuric acid reagent tablets | 250 units | 08345 | 1 | 0.1 | 0.004 |
| Other reagents Consult | | | | | |

# Blue Check

## DESCRIPTION

Smart test strips (50 strips) that can be used with Blueriiot app to get advices to better treat the pool.

- pH.
- Free chlorine.
- Bromine.
- Total alkalinity.
- Total hardness.
- Cyanuric acid.
- Blueriiot Pool & spa Assistant free app.

| Code | Standard Pack | Standard weight in kg | Standard volume in m³ |
|---|---|---|---|
| 71664* | 1 | - | - |
| 71665* | 1 | - | - |

*71664 : Packaging in English, French, Dutch and German.
*71665 : Packaging in English, Spanish, Italian and Portuguese.

# Blue Connect GO

## DESCRIPTION

The smart connected pool assistant to get essential water parameters and advices using the Blueriiot app.

- Temperature.
- pH.
- ORP (platinum sensor for use with fresh water).
- Works with Bluetooth & Sigfox (remote access from anywhere).
- Blueriiot Pool & spa Assistant free app.
- Compatible with chlorine and bromine pools and spas. Not compatible with salt chlorinator pools and spas.
- Blueriiot Premium available upon subscription (monthly or yearly).

| Code | Standard Pack | Standard weight in kg | Standard volume in m³ |
|---|---|---|---|
| 73014 | 1 | - | - |

# Blue Connect Plus

## DESCRIPTION

The smart connected pool assistant to get all water parameters and premium advices using the Blueriiot app.

- Temperature.
- pH.
- ORP (gold sensor for uses with fresh and salt water).
- Conductivity (Salinity).
- Works with Bluetooth & Sigfox (remote access from anywhere).
- Up to 20 automatical measurements.
- Blueriiot Pool & spa Assistant free app.
- Blueriiot Premium lifetime included.
- Blue Fit50.
- Virtual Pool Care (pools management portal for pool pros) lifetime included.
- Compatible with chlorine, bromine and salt chlorinator pools and spas.

| Code | Standard Pack | Standard weight in kg | Standard volume in m³ |
|---|---|---|---|
| 71663 | 1 | - | - |

# Fit

## DESCRIPTION

50 mm tapping saddle. For in-line installation onto plumbing (better integration and more accurate reading).

| | Code | Standard Pack | Standard weight in kg | Standard volume in m³ |
|---|---|---|---|---|
| 50 mm tapping saddle | 7015C002 | 1 | - | - |

# Calibration Kit

## DESCRIPTION

For Blue Connect sensor's calibration. The calibration is recommended once a year depending of the usage.

- 2 x 20ml packets of pH4.
- 2 x 20ml packets of pH7.
- 2 x 20ml packets of ORP 468 mV.

| | Code | Standard Pack | Standard weight in kg | Standard volume in m³ |
|---|---|---|---|---|
| | 71666 | 6 | - | - |

# Battery

## DESCRIPTION

Battery for Blue Connect.

| | Code | Standard Pack | Standard weight in kg | Standard volume in m³ |
|---|---|---|---|---|
| | 7015C001 | 1 | - | - |

# Sensor

## DESCRIPTION

Sensors for Blue Connect:

- 3-in-1 sensor Pt : Compatible with chlorine, bromine pools and spas.
- 4-in-1 sensor Au : compatible with chlorine, bromine and salt pools and spas.

| | Code | Standard Pack | Standard weight in kg | Standard volume in m³ |
|---|---|---|---|---|
| 4-in-1 sensor Au | 7015R002 | 1 | - | - |
| 3-in-1 sensor Pt | 7015R003 | 1 | - | - |

# Extender

## DESCRIPTION

Wi-Fi bridge. With Blue Extender, use Blue Connect with a Wi-Fi network.

| | Code | Standard Pack | Standard weight in kg | Standard volume in m³ |
|---|---|---|---|---|
| | 7015C004 | 1 | - | - |

# AUTOMATIC WATER TREATMENT

**356 WATER TREATMENT SOLUTIONS**

**357 SALT WATER ELECTROLYSIS**
- 358 Elite Connect
- 359 Smart Next
- 360 Energy Connect
- 361 E-Next
- 362 Bering Sel
- 362 Earthing anode

**363 AUTOMATIC UV DISINFECTION**
- 364 Neolysis Connect
- 365 Heliox UV LP
- 366 Lyriox UV-C

**367 PH & CHLORINE AUTOMATIC REGULATIONS**
- 368 Control Connect
- 369 Control Connect All-In-One
- 369 Relay box
- 369 Dual pH EV
- 370 Control Basic Plus
- 370 Redox basic Plus
- 371 Control Basic Next
- 372 Redox Basic Next
- 372 Peristatic pump

**373 CHLORINE / BROMINE FEEDERS**
- 373 Dossi
- 373 Floating Dispenser
- 373 Quick Test Strips

**374 INTRODUCTION**

**375 DOSING SYSTEMS**
- 376 pH Expert
- 378 Chlor Expert

**380 SALT WATER CHLORINATORS**
- 380 Ei²
- 381 EiSalt
- 384 eXPERT
- 385 eXO® iQ & eXO® iQ LS
- 385 Hydroxinator® iQ
- 387 eXO® iQ
- 388 eXO® iQ LS
- 389 pH Link
- 390 Dual Link

**391 MAGNAPOOL® MAGNESIUM BASED CHLORINATOR**
- 393 Hydroxinator® iQ
- 394 MagnaPool® Minerals
- 395 Crystal Clear

**396 MINERAL PURIFERS**
- 396 Nature² Spa

# RESIDENTIAL POOLS WATER TREATMENT SOLUTIONS

- Disinfection management and pH management represent 20% of pool water treatment but 80% of daily in-store enquiries.
- Correctly managing disinfection and pH is then key for a perfect pool experience. AstralPool® offers 4 product families to relieve the pool owners from constraints.

## > HOW TO CHOSE THE MOST ADAPTED WATER TREATMENT SOLUTION?

Our water treatment product portfolio allows pool owners to adapt their equipment to their needs, from lowering maintenance constraints to increasing bathing comfort, connectivity or environmentally friendly solutions. The chart below will help you chose the best option for your pool.

For an optimal disinfection against pathogens (bacteria, viruses, fungi...), you may combine UV treatment with chlorinated treatment. It delivers a larger efficacy spectrum ensuring pool's water is disintected AND disinfectant.

Water treatment solutions mapping

| | | Dosing | UV | Salt Water Electrolysis | Neolysis 2 |
|---|---|---|---|---|---|
| Type of disinfection | | Liquid chlorine | UV treatment | Salt water chlorination | Hybrid UV treatment + Salt water chlorination |
| pH regulation* | | ✓ | ✓ | ✓ | ✓ |
| Disinfection regulation (ORP or PPM)* | | ✓ | ✓ | ✓ | ✓ |
| Pool equipment control (AUX relays)* | | - | - | ✓ | ✓ |
| IoT connectivity | App control | - | - | Fluidra Pool | Fluidra Pool |
| | Compatible with Connect & Go automation | ✓ (NN Thing) | - | ✓ (NN Thing) | ✓ (NN Thing) |
| Reduced maintenance constraints | | ✓ | ✓✓ | ✓✓✓ | ✓✓✓ |
| Reduced use/handling of chemicals | | ✓ | ✓✓ | ✓✓✓ | ✓✓✓ |
| Gentle and eco-friendly treatment | | ✓ | ✓✓ | ✓✓✓ | ✓✓✓ |
| Investment | At installation | € - €€€ | € - €€ | € - €€€ | €€ - €€€ |
| | Seasonal cost | €€€ | €€ | € | € |

* Depends on product range or model.

# > COMPARATIVE TABLE

## SALT WATER ELECTROLYSIS - RESIDENTIAL POOLS

| Product name | | Elite Connect | | | | Smart Next | | | | | Energy Connect | | | Bering Sel |
|---|---|---|---|---|---|---|---|---|---|---|---|---|---|---|
| Chlorine output (g/h) | | 12 | 24 | 32 | 42 | 7 | 12 | 21 | 30 | 40 | 7 | 12 | 21 | 8 |
| Pool volume<br>Based on 8 h/day of chlorination for a pool water = 25°C (if pool water > 25°C : -15% max volume) | | 50 | 100 | 150 | 200 | 30 | 50 | 90 | 140 | 180 | 30 | 50 | 90 | 35 |
| Salinity (g/L) | | Standard Mini: 5 - Ideal: 6<br>Low Salt Mini: 1 - Ideal: 2 | | | | Mini: 5 - Ideal: 6 | | | | | Mini: 3,5 - Ideal: 4 | | | Mini: 3,2 - Ideal: 4 |
| Output control | | 0-100% | | | | 0-100% (10 levels) | | | | | 0-100% (6 levels) | | | 0-100% (4 levels) |
| User interface | | 2,8" Oled colour touchscreen | | | | Back panel with LCD & touch buttons | | | | | Back panel with LCD & touch buttons | | | LED |
| Minimum flow rate ($m^3/h$) | | 2 | 4 | 6 | 8 | 2 | 3 | 5 | 6 | 8 | 2 | 3 | 5 | 3 |
| Electric power (W) | | 83 | 165 | 205 | 205 | 46 | 92 | 92 | 184 | 207 | 46 | 92 | 92 | 100 |
| Protection rating | | IP65 | | | | IP65 | | | | | IPX4 | | | IP24 |
| Type of cell | | Horizontal or vertical | | | | Horizontal or vertical | | | | | Horizontal or vertical | | | Horizontal or vertical |
| Cell service life | | 12,000 h | | | | 10,000 h | | | | | 8,000 h | | | 8,000 h |
| Polarity reversal | | ✓ (2-3-4-7 h) | | | | ✓ (2-3-4-7 h) | | | | | ✓ (2-3-4-7 h) | | | ✓ |
| Cover mode | | ✓ | | | | ✓ | | | | | ✓ | | | - |
| Boost mode | | ✓ | | | | ✓ | | | | | ✓ | | | - |
| Lack of water: | | | | | | | | | | | | | | |
| Gas sensor | | ✓ | | | | ✓ | | | | | ✓ | | | - |
| Flow Switch | | ✓ | | | | ✓ (Optional) | | | | | ✓ (Optional) | | | - |
| Salt fail-safe mode (High - Low) | | ✓ | | | | ✓ | | | | | ✓ | | | - |
| Running time counter | | ✓ | | | | ✓ | | | | | - | | | - |
| Temperature display | | ✓ | | | | ✓ | | | | | ✓ | | | - |
| Salinity display | | ✓ | | | | ✓ | | | | | ✓ | | | - |
| Timer scheduling | | ✓ | | | | - | | | | | - | | | - |
| Connectivity / App control: | | | | | | | | | | | | | | |
| IoT connectivity | App control | ✓ (embedded)<br>Fluidra Pool | | | | ✓<br>Fluidra Pool<br>(With iQBridge RS WiFi gateway) | | | | | ✓ (embedded)<br>Fluidra Pool | | | - |
| | Compatible with Connect & Go automation | NN Thing | | | | NN Thing | | | | | - | | | - |
| External slave control | | ✓ | | | | ✓ | | | | | ✓ | | | - |
| pH control | | ✓ (Scalable) | | | | ✓ (Optional) | | | | | ✓ (Scalable version) | | | - |
| pH pump included | | ✓ (Optional) | | | | ✓ | | | | | ✓ (Optional) | | | - |
| ORP control | | ✓ (Scalable) | | | | ✓ (Optional) | | | | | ✓ (Scalable version) | | | - |
| ppm control | | ✓ (Scalable) | | | | - | | | | | - | | | - |
| Low Salt version | | ✓ | | | | - | | | | | - | | | - |
| Timer | | ✓ | | | | - | | | | | - | | | - |
| Inputs - Outputs | | 4 (digital) - 4 (relays) | | | | - | | | | | - | | | - |
| Warranty | | 3 years | | | | 2 years | | | | | 2 years | | | 2 years |

SALT WATER CHLORINATORS

# Elite Connect

+ Enjoy more, maintain less: Controls the water quality and the pool's equipment through one single interface
+ Unrivaled upgradeability: Suits all needs with an option adapted to each need
+ Integrated connectivity: using built-in WiFi and the Fluidra Pool app

3 YEAR WARRANTY · ALL TYPES OF POOLS · LOW SALT VERSION · CHEMICAL REDUCTION · FLUIDRA POOL · MADE IN EUROPE

## DESCRIPTION

- 3 production modes : Normal, Boost (100 %) and Cover (adjustable)
- Fitted as standard with a gas sensor and flow switch
- 4 digital inputs and 4 digital outputs (relays) to control the filtration pump, heater, lighting, etc.
- Programming with built-in timers for all pool functions

- App Control:Yes
- App Control Type:Fluidra Pool
- User Interface:LCD Touchscreen

## ACCESSORIES INCLUDED

- Flow switch

## OPTIONAL ACCESSORIES

- Relay Box-72454
- Module S-Driver Control pH-70049
- Module S-Driver SD-Pump (pH)-70054
- Module S-Driver SD-ORP-70051
- Module S-Driver Control PPM-70052
- Module S-Driver SD pH+ORP - 76759

## DESCRIPTION

| Name | Recommended Pool Volume | Nominal Chlorine Production | Sku Reference | Packaged Product Weight |
|---|---|---|---|---|
| Elite Connect 12 | 50m³ | 12g/h | 76742 | 6,3kg |
| Elite Connect 24 | 100m³ | 24g/h | 76743 | 8,2kg |
| Elite Connect 32 | 150m³ | 32g/h | 76744 | 8,5kg |
| Elite Connect 42 | 200m³ | 42g/h | 76745 | 9,1kg |
| Elite Connect LS 12 | 50m³ | 12g/h | 76746 | 6,3 kg |
| Elite Connect LS 24 | 100m³ | 24g/h | 76747 | 8,2 kg |
| Elite Connect LS 32 | 150m³ | 32g/h | 76748 | 9,5kg |

## TECHNICAL FEATURES

| Name | Elite Connect 12 | Elite Connect 24 | Elite Connect 32 | Elite Connect 42 | Elite Connect LS 12 | Elite Connect LS 24 | Elite Connect LS 32 |
|---|---|---|---|---|---|---|---|
| Sku Reference | 76742 | 76743 | 76744 | 76745 | 76746 | 76747 | 76748 |
| Cell Position | Vertical | | | | | | |
| Polarity reversal | Yes: 2, 3, or 4 h | | | | | | |
| Required Salt level Minimum | 5g/L | | | | 1g/L | | |
| Electric Power Supply | 220-240 V / 50-60 Hz | | | | | | |
| Working life of cells | 12.000 hours (in good operating conditions) | | | | | | |
| Minimum water temperature | 5ºC | | | | | | |
| Maximum water temperature | 40ºC | | | | | | |
| Safety | Temperature sensor: Chlorine production lowered in case of cold water to protect the electrode<br>'Low salt' & 'High salt' messages : Reduced production to protect the electrode<br>'No flow' message: Production is interrupted as long as conditions are not ideal<br>Mechanical flow switch | | | | | | |
| Product Dimensions | 23,0 x 37,0 x 13,5cm | | | | | | |

70049

70054

70051

76759

70052

73471

SALT WATER CHLORINATORS

# Smart Next

**+ Salt water chlorination for all**
**+ Easy as can be**
**+ More than meets the eye**

2 YEAR WARRANTY
ALL TYPES OF POOLS
CHEMICAL REDUCTION
FLUIDRA POOL
MADE IN EUROPE

## DESCRIPTION

- Smart Next is available as a salt water chlorinator, or with regulations: pH only or pH & ORP for chlorination control
- Equipped with a gas sensor (optional flow switch) and compact sensor holder (pH and pH/Rx options) as standard
- Output control from 0 to 100%
- Bio pool mode with specific pH & ORP setpoint thresholds
- 24h Boost mode,

- App Control:Yes (optional with iQ BridgeRS)
- App Control Type:Fluidra Pool
- User Interface:LCD and touch buttons

## ACCESSORIES INCLUDED

- pH accessories
(provided with pH & pH/Rx models)
- ORP accessories
(provided with pH/Rx models)

## OPTIONAL ACCESSORIES

- Flow switch-71124
- iQBridge RS-75042

## DESCRIPTION

| Name | Recommended Pool Volume | Nominal Chlorine Production | Sku Reference | Packaged Product Weight |
|---|---|---|---|---|
| Smart Next 7 | 30m³ | 7g/h | 70058 | 6,2kg |
| Smart Next 12 | 50m³ | 12g/h | 70060 | 6,3kg |
| Smart Next 21 | 90m³ | 21g/h | 70062 | 8,2kg |
| Smart Next 30 | 140m³ | 30g/h | 70063 | 9,1kg |
| Smart Next 40 | 180m³ | 40g/h | 70064 | 9,5kg |
| Smart Next pH 7 | 30m³ | 7g/h | 70083 | 6,2kg |
| Smart Next pH 12 | 50m³ | 12g/h | 70084 | 8,15kg |
| Smart Next pH 21 | 90m³ | 21g/h | 70085 | 9,5kg |
| Smart Next pH 30 | 140m³ | 30g/h | 70086 | 10,6kg |
| Smart Next pH40 | 180m³ | 40g/h | 70093 | 10,9kg |
| Smart Next pH/Rx 7 | 30m³ | 7g/h | 71692 | 6,65kg |
| Smart Next pH/Rx 12 | 50m³ | 12g/h | 71693 | 8,15kg |
| Smart Next pH/Rx 21 | 90m³ | 21g/h | 71694 | 9,95kg |
| Smart Next pH/Rx 30 | 140m³ | 30g/h | 71695 | 11,05kg |
| Smart Next pH/Rx 40 | 180m³ | 40g/h | 71696 | 11,35kg |

## TECHNICAL FEATURES

| Name | Smart Next 7 | Smart Next 12 | Smart Next 21 | Smart Next 30 | Smart Next 40 | Smart Next pH 7 | Smart Next pH 12 | Smart Next pH 21 | Smart Next pH 30 | Smart Next pH 40 | Smart Next pH/ Rx 7 | Smart Next pH/ Rx 12 | Smart Next pH/ Rx 21 | Smart Next pH/ Rx 30 | Smart Next pH/ Rx 40 |
|---|---|---|---|---|---|---|---|---|---|---|---|---|---|---|---|
| Sku Reference | 70058 | 70060 | 70062 | 70063 | 70064 | 70083 | 70084 | 70085 | 70086 | 70093 | 71692 | 71693 | 71694 | 71695 | 71696 |
| Cell Position | Vertical | | | | | | | | | | | | | | |
| Polarity reversal | Yes: adjustable (2 or 3h) | | | | | | | | | | | | | | |
| Required Salt level Minimum | 4g/L | | | | | | | | | | | | | | |
| Electric Power Supply | 220-240 V / 50-60 Hz | | | | | | | | | | | | | | |
| Working life of cells | 10.000 hours (in good operating conditions) | | | | | | | | | | | | | | |
| Reading scale | | | | | | 0,0 - 9,9 pH | | | | | 0,0 - 9,9 pH 0 - 999 mV | | | | |
| Reading accuracy | | | | | | 0,01 pH | | | | | 0,01 pH - 1 mV | | | | |
| Sensor tolerance temperature | Yes | | | | | | | | | | | | | | |
| Minimum water temperature | 5ºC | | | | | | | | | | | | | | |
| Maximum water temperature | 40ºC | | | | | | | | | | | | | | |
| Product Dimensions | 23,0 x 37,0 x 13,5 cm | | | | | | | | | | | | | | |

pH accessories
(provided with pH & pH/Rx models)

ORP accessories
(provided with pH/Rx models)

SALT WATER CHLORINATORS

# Energy Connect

+ Connected, unconditionaly
+ Designed to last and adapt to every situation
+ Easy to install, simple to use
+ Optimal bathing comfort without any chemical adjustment

2 YEAR WARRANTY

CHEMICAL REDUCTION

FLUIDRA POOL

MADE IN EUROPE

## DESCRIPTION

- Embedded Bluetooth and WiFi connectivity with remote control using the Fluidra Pool app
- Large black panel user interface with blue information circle and touch buttons
- Compact & translucent cell with high quality titanium plates (8 000 h)
- Possibility to install a flow swicth (option)
- Upgradable anytime with pH & ORP kit for a complete water treatment (scalable versions)
- App Control Type: Fluidra Pool
- User Interface: LCD and touch buttons

## OPTIONAL ACCESSORIES

- pH Kit-76778
- ORP Kit-76779
- Flow switch kit-76780

## DESCRIPTION

| Name | Recommended Pool Volume | Nominal Chlorine Production | Sku Reference |
|---|---|---|---|
| Energy Connect 7 g/h | 30m³ | 7g/h | 76766 |
| Energy Connect 12 g/h | 50m³ | 12g/h | 76767 |
| Energy Connect 21 g/h | 90m³ | 21g/h | 76768 |
| Energy Connect scalable 7 g/h | 30m³ | 7g/h | 76769 |
| Energy Connect scalable 12 g/h | 50m³ | 12g/h | 76770 |
| Energy Connect scalable 21 g/h | 90m³ | 21g/h | 76771 |

## TECHNICAL FEATURES

| Name | Energy Connect 7 g/h | Energy Connect 12 g/h | Energy Connect 21 g/h | Energy Connect scalable 7 g/h | Energy Connect scalable 12 g/h | Energy Connect scalable 21 g/h |
|---|---|---|---|---|---|---|
| Sku Reference | 76766 | 76767 | 76768 | 76769 | 76770 | 76771 |
| Cell Position | Vertical & Horizontal | | | | | |
| Polarity reversal | Yes: 2, 3, 4 or 7 h (default 2 h) | | | | | |
| Required Salt level Minimum | 4g/L | | | | | |
| Electric Power Supply | 220-240 V / 50 Hz | | | | | |
| Working life of cells | 8.000 h (in good operating conditions) | | | | | |
| Minimum water temperature | 5ºC | | | | | |
| Maximum water temperature | 40ºC | | | | | |
| Safety | 'Alarm' icon to indicate incorrect working conditions (no flow, low salt...)<br>Gas sensor (optional flow switch)<br>Water temperature sensor (protects the electrode in case of bad working conditions)<br>Salinity reading | | | | | |
| Product Dimensions | 21,6 x 36,7 x 15cm | | | | | |

76778

76779

76780

SALT WATER CHLORINATORS

# E-Next

+ Enjoy more, maintain less: E-Next will take it on itself to give you more time to enjoy your pool.
+ Reduced footprint: E-Next can fit in more installations
+ Safety first: Security features such as gas sensor

2 YEAR WARRANTY

MADE IN EUROPE

## DESCRIPTION

- E-Next salt water chlorinator is able to treat pools up to 180 m³.
- It automatically disinfects and lowers the chlorine production if pool is equipped with an automatic pool cover (dedicated dry contact).
- The polarity reversal will help cleaning the electrodes, and its salt alarm will warn the user in case of low salt concentration to avoid damaging the cell and the pool to turn green.

- User Interface:LCD LED Display

## DESCRIPTION

| Name | Recommended Pool Volume | Nominal Chlorine Production | Sku Reference | Packaged Product Weight |
|---|---|---|---|---|
| E-Next 7 | 30m³ | 7g/h | 74081 | 4,80kg |
| E-Next 12 | 50m³ | 12g/h | 74082 | 6,30kg |
| E-Next 21 | 90m³ | 21g/h | 74083 | 8,20kg |
| E-Next 30 | 140m³ | 30g/h | 74084 | 9,10kg |
| E-Next 40 | 180m³ | 40g/h | 74085 | 9,50kg |
| E-Next pH 7 | 30m³ | 7g/h | 74944 | 6,20kg |
| E-Next pH 12 | 50m³ | 12g/h | 74945 | 7,70kg |
| E-Next pH 21 | 90m³ | 21g/h | 74946 | 9,50kg |
| E-Next pH 30 | 140m³ | 30g/h | 74947 | 10,60kg |
| E-Next pH 40 | 180m³ | 40g/h | 74948 | 10,90kg |

## TECHNICAL FEATURES

| Name | E-Next 7 | E-Next 12 | E-Next 21 | E-Next 30 | E-Next 40 | E-Next pH 7 | E-Next pH 12 | E-Next pH 21 | E-Next pH 30 | E-Next pH 40 |
|---|---|---|---|---|---|---|---|---|---|---|
| Sku Reference | 74081 | 74082 | 74083 | 74084 | 74085 | 74944 | 74945 | 74946 | 74947 | 74948 |
| Cell Position | Horizontal | | | | | | | | | |
| Polarity reversal | Yes: adjustable (2 or 3h) | | | | | | | | | |
| Required Salt level Minimum | 4g/L | | | | | | | | | |
| Electric Power Supply | 220-240 V / 50-60 Hz | | | | | | | | | |
| Working life of cells | 8.000 – 10.000 h (in good operating conditions) | | | | | | | | | |
| Reading scale | | | | | | 0,0 - 9,9 pH | | | | |
| Reading accuracy | | | | | | 0,01 pH | | | | |
| Minimum water temperature | 5°C | | | | | | | | | |
| Maximum water temperature | 40°C | | | | | | | | | |
| Safety | 'Low salt' indicator light: Reduced production to protect the electrode<br>All indicators blinking: Production is interrupted as long as conditions are not ideal | | | | | | | | | |
| Product Dimensions | 20,0 x 26,4 x 13,8cm | | | | | | | | | |

pH accessories
(provided with pH version)

SALT WATER CHLORINATORS

# Bering Sel

## DESCRIPTION

Self-cleaning salt water chlorinator thanks to polarity reversal. For pools up to 35 m³
. Compact design. Manual
output adjustment (from 0 to 100%). 3 indicators: solid green = running, solid red = in standby mode, flashing
red = failure (lack of water, lack of salt).

2 YEAR WARRANTY

MADE IN EUROPE

| Name | Recommended Pool Volume | Nominal Chlorine Production | Sku Reference | Packaged Product Weight |
|---|---|---|---|---|
| Bering Sel | 35m³ | 8g/h | 64315 | 6kg |

ACCESSORIES FOR AUTOMATIC WATER TREATMENT

# Earthing anode

## DESCRIPTION

Easy-to-install stainless steel earthing anode to remove roaming curents that might be present with salt water.
Provided with saddle clamp kit.

MADE IN EUROPE

| Name | Sku Reference |
|---|---|
| Earthing anode Ø 50 mm | 25894 |
| Earthing anode Ø 63 mm | 25895 |

# > COMPARATIVE TABLE

| Product name | Neolysis Connect | | | Heliox UV LP SS | | | | Heliox UV LP PE | | | | Lyriox UV-C | | | | | | |
|---|---|---|---|---|---|---|---|---|---|---|---|---|---|---|---|---|---|---|
| Type | Hybrid UV + electrolysis | | | UV treatment | | | | UV treatment | | | | UV treatment | | | | | | |
| Power range (rated UV Watt) | 48 | 56 | 56 | 48 | 56 | 90 | 150 | 48 | 56 | 75 | 90 | 15 | 25 | 30 | 50 | 55 | 75 | 110 |
| Chlorine output (g/h electrolysis) | 12 | 24 | 32 | - | | | | - | | | | - | | | | | | |
| Salinity (g/L) | Standard Mini: 5 - Ideal: 6<br>Low Salt Mini: 1 - Ideal: 2 | | | - | | | | - | | | | - | | | | | | |
| Max pool volume ($m^3$). Based on 8 h/day filtration for a pool water = 25°C (if temp >25°C : -15% max volume) | 50 | 100 | 150 | 50 | 60 | 90 | 140 | 50 | 60 | 75 | 90 | 15 | 25 | 30 | 50 | 55 | 75 | 110 |
| Flow rate ($m^3$/h for 30 mJ/$cm^2$ UV efficiency) | 10 | 14 | 18 | 10 | 14 | 25 | 30 | 10 | 14 | 20 | 25 | 2 | 2 | 4 | 5 | 8 | 10 | 15 |
| **UV reactor** | | | | | | | | | | | | | | | | | | |
| Body material | Polyethylene (PE) | | | AISI 316L Stainless Steel | | | | Polyethylene (PE) | | | | PVC | | | | | | |
| Compatible with salt water | ✓ | | | - | | | | ✓ | | | | ✓ | | | | | | |
| Max pressure (bar) | 3,0 | | | 3,0 | | | | 3,0 | | | | 2,5 | | | | | | |
| UV lamp service life (hours) | 13.000 | | | 13.000 | | | | 13.000 | | | | 9.000 | | | | | | |
| Electrolysis electrode service life (hours) | 12.000 | | | - | | | | - | | | | - | | | | | | |
| **Power pack / Ballast casing** | | | | | | | | | | | | | | | | | | |
| User interface | 2,8" Oled touchscreen | | | LCD screen(s) | | | | LCD screen(s) | | | | - | | | | | | |
| UV lamp running time counter | ✓ | | | ✓ | | | | ✓ | | | | Reminder label | | | | | | |
| Ballast type | Integrated | | | Integrated | | | | Integrated | | | | Integrated | | | | | | |
| pH control | ✓ (scalable) | | | ✓(depends on model) | | | | ✓(depends on model) | | | | - | | | | | | |
| pH dosing pump included | ✓ (optional) | | | - | | | | - | | | | - | | | | | | |
| ORP control | ✓ (scalable) | | | ✓(depends on model) | | | | ✓(depends on model) | | | | - | | | | | | |
| Timer schedules | ✓ | | | - | | | | - | | | | - | | | | | | |
| Polarity reversal | ✓ (2-3-4-7 h) | | | - | | | | - | | | | - | | | | | | |
| Cover mode | ✓ | | | - | | | | - | | | | - | | | | | | |
| Flow switch | ✓ | | | ✓ | | | | ✓ | | | | - | | | | | | |
| External output control | ✓ | | | - | | | | - | | | | - | | | | | | |
| Iputs - Outputs | 4 (digital) - 4 (relays) | | | - | | | | - | | | | - | | | | | | |
| **Connectivity / App control** | | | | | | | | | | | | | | | | | | |
| IoT connectivity – App control | ✓ (embedded) Fluidra Pool | | | - | | | | - | | | | - | | | | | | |
| IoT connectivity – Compatible with Connect & Go automation | NN Thing | | | - | | | | - | | | | - | | | | | | |
| Warranty | 3 years | | | 2 years | | | | 2 years | | | | 2 years | | | | | | |

HYBRID SANITATION SYSTEMS

# Neolysis Connect

- **Exclusive hybrid UV + salt water treatment**
- **Total pool control: exists with pH & ORP regulations for a complete water treatment**
- **Exists in Low Salinity Version**
- **Integrated connectivity: using built-in WiFi and the Fluidra Pool app**

3 YEAR WARRANTY · ALL TYPES OF POOLS · LOW SALT VERSION · CHEMICAL REDUCTION · FLUIDRA POOL · MADE IN EUROPE

## DESCRIPTION

- Hybrid disinfection based on UV and electrolysis for maximum disinfection efficiency.
- Fitted as standard with a flow switch
- 4 digital inputs and 4 digital outputs (relays) to control the filtration pump, heater, lighting, etc.
- Programming with built-in timers for all pool functions

- App Control:Yes
- App Control Type:Fluidra Pool

## ACCESSORIES INCLUDED

- Flow switch kit

## OPTIONAL ACCESSORIES

- Relay Box-72454
- Module S-Driver Control pH-70049
- Module S-Driver SD-Pump (pH)-70054
- Module S-Driver SD-ORP-70051
- Module S-Driver Control PPM-70052

* Module S-Driver SD pH+ORP - 76759

## DESCRIPTION

| Name | Recommended Pool Volume | Nominal Chlorine Production | Sku Reference | Packaged Product Weight |
|---|---|---|---|---|
| Neolysis Connect LS 12 + UV 48W | 50m³ | 12g/h | 76753 | 13,5kg |
| Neolysis Connect LS 24 + UV 56W | 100m³ | 24g/h | 76754 | 14,0kg |
| Neolysis Connect LS 32 + UV 56W | 150m³ | 32g/h | 76755 | 15,5kg |
| Neolysis Connect 12 + UV 48W | 50m³ | 12g/h | 76756 | 13.5kg |
| Neolysis Connect 24 + UV 56W | 100m³ | 24g/h | 76757 | 14kg |
| Neolysis Connect 32 + UV 56W | 150m³ | 32g/h | 76758 | 15.5kg |

## TECHNICAL FEATURES

| Name | Neolysis Connect LS 12 + UV 48W | Neolysis Connect LS 24 + UV 56W | Neolysis Connect LS 32 + UV 56W | Neolysis Connect 12 + UV 48W | Neolysis Connect 24 + UV 56W | Neolysis Connect 32 + UV 56W |
|---|---|---|---|---|---|---|
| Sku Reference | 76753 | 76754 | 76755 | 76756 | 76757 | 76758 |
| Cell Position | Vertical | | | | | |
| Polarity reversal | Yes: 2, 3, or 4 h | | | | | |
| Required Salt level Minimum | 1 g/Lg/L | | | 5 g/Lg/L | | |
| Electric Power Supply | 220-240 V / 50-60 Hz | | | | | |
| Working life of cells | 12.000 hours (in good operating conditions) | | | | | |
| Minimum water temperature | 5°C°C | | | | | |
| Maximum water temperature | 40°C°C | | | | | |
| Product Dimensions | 23,0 x 37,0 x 13,5cm | | | | | |

70049

70054

70051

76759

70052

73471

UV DISINFECTION SYSTEMS

# Heliox UV LP

+ Heliox UV LP systems (LP = Low Pressure) are designed to be used in residential pools
+ work on a wavelength of 254 nm

2 YEAR WARRANTY · CHEMICAL REDUCTION · MADE IN EUROPE

## DESCRIPTION

- Stainless steel and polyethylene versions
- Double lamp version (LP30 and LP30+)
- Plastic injection power box
- Fluidra technology (design and manufacturing)
- Lamp "ON" indicator
- Electronic counter for working time and ignitions (lamp lifetime control)
- Flow switch (optional, included in LP+ versions)
- LP+ versions come with a built-in pH/ORP controller (complete package)
- LP+ versions come with a flow switch, pH/ORP sensors and sensor holder (dosing pumps not included)

## DESCRIPTION

| Name | Sku Reference | Packaged Product Weight |
|---|---|---|
| Heliox UV LP 10 Inox | 52206 | 11,80 kg |
| Heliox UV LP 14 Inox | 52207 | 12,00 kg |
| Heliox UV LP 25 Inox | 52208 | 15,00 kg |
| Heliox UV LP 30 Inox | 52209 | 15,60 kg |
| Heliox UV pH/ORP 10 LP+ SS | 52210 | 12,10 kg |
| Heliox UV pH/ORP 14 LP+ SS | 52211 | 12,40 kg |
| Heliox UV pH/ORP 25 LP+ SS | 52212 | 16,00 kg |
| Heliox UV pH/ORP 30 LP+ SS | 52213 | 16,50 kg |
| Heliox UV LP P10 PE | 52214 | 7,90 kg |
| Heliox UV LP P14 PE | 52215 | 8,10 kg |
| Heliox UV LP P20 PE | 52216 | 9,20 kg |
| Heliox UV LP P25 PE | 52217 | 9,60 kg |
| Heliox UV pH/ORP P10 LP+ PE | 52218 | 8,10 kg |
| Heliox UV pH/ORP P14 LP+ PE | 52219 | 8,30 kg |
| Heliox UV pH/ORP P20 LP+ PE | 52220 | 10,80 kg |
| Heliox UV pH/ORP P25 LP+ PE | 52221 | 11,15 kg |

## TECHNICAL FEATURES

| Material | Code | Model | Model | Flow rate (30 mJ/cm²) | Num. lamps | Rated / UV-C power | Total height (mm) | Ø reactor |
|---|---|---|---|---|---|---|---|---|
| Stainless steel | 52206 & 52210 | UV LP 10 | UV LP 10+ | 10 m³/h | 1 | 48 / 13 W | 790 | 204 |
| Stainless steel | 52207 & 52211 | UV LP 14 | UV LP 14+ | 14 m³/h | 1 | 56 / 18 W | 790 | 204 |
| Stainless steel | 52208 & 52212 | UV LP 25 | UV LP 25+ | 25 m³/h | 1 | 90 / 30 W | 1033 | 204 |
| Stainless steel | 52209 & 52213 | UV LP 30 | UV LP 30+ | 30 m³/h | 2 | 2 x 75 / 2 x 25 W | 1033 | 204 |
| PE | 52214 & 52218 | UV LP P10 | UV LP P10+ | 10 m³/h | 1 | 48 / 13 W | 735 | 200 |
| PE | 52215 & 52219 | UV LP P14 | UV LP P14+ | 14 m³/h | 1 | 56 / 18 W | 735 | 200 |
| PE | 52216 & 52220 | UV LP P20 | UV LP P20+ | 20 m³/h | 1 | 75 / 25 W | 978 | 200 |
| PE | 52217 & 52221 | UV LP P25 | UV LP P25+ | 25 m³/h | 1 | 90 / 30 W | 978 | 200 |

UV DISINFECTION SYSTEMS

# Lyriox UV-C

+ Affordable & sustainable: UV-C treatment solution for pools & spas
+ Eco-friendly sanitation: drastically reduces the use of residual disinfection products
+ Compact & easy to install

2 YEAR WARRANTY

CHEMICAL REDUCTION

MADE IN EUROPE

## DESCRIPTION

- Piping Connection : 50 mm (15 to 50) or 63 mm (55 to 110)

Corrosion free : 100% made of PVC, hence suitable for use in combination with salt water
Integrated ballast casing
Also exists in a compact U-shape version for easier installation (50W model)
UV-C high quality lamps (9 000 h)

## DESCRIPTION

| Name | Sku Reference |
|---|---|
| Lyriox UV-C 15W | 82100 |
| Lyriox UV-C 25W | 82101 |
| Lyriox UV-C 30W | 82102 |
| Lyriox UV-C 50W Compact | 82103 |
| Lyriox UV-C 55W | 82104 |
| Lyriox UV-C 75W | 82105 |
| Lyriox UV-C 110W | 82106 |

## TECHNICAL FEATURES

| Name | Lyriox UV-C 15W | Lyriox UV-C 25W | Lyriox UV-C 30W | Lyriox UV-C 50W Compact | Lyriox UV-C 55W | Lyriox UV-C 75W | Lyriox UV-C 110W |
|---|---|---|---|---|---|---|---|
| Sku Reference | 82100 | 82101 | 82102 | 82103 | 82104 | 82105 | 82106 |
| Flow rate ($m^3$/h) (30 mJ/cm2) | 2$m^3$/h | | 4$m^3$/h | 5$m^3$/h | 8$m^3$/h | 10$m^3$/h | 15$m^3$/h |
| Number of UV Lamps | 1 | | | | | | |
| Rated / UV-C power | 15W | 25W | 30W | 50W | 55W | 75W | 119W |

# > COMPARATIVE TABLE

## PH & CHLORINE AUTOMATIC REGULATIONS RESIDENTIAL POOLS

| Product platform name | Control Connect | | | | | Dual Basic Plus | | Basic Plus | | | Basic Next | | |
|---|---|---|---|---|---|---|---|---|---|---|---|---|---|
| Product name | Control Connect All-In-One | | Control Connect | | | Dual pH-EV Basic Control Plus | | Control Basic Plus | | Redox Basic EV Plus | Control Basic Next | | Redox Basic EV Next |
| Regulation type | pH & chlorine liquid dosing | | | | | pH & electrolysis control | | pH or chlorine liquid dosing | | Electrolysis management | pH or chlorine liquid dosing | | Electrolysis management |
| Measure technology | pH | ORP | pH | ORP | PPM | pH | ORP | pH | ORP | ORP | pH | ORP | ORP |
| Buit-in dosing pump type | Peristaltic (x2) | | - | | | Peristaltic | - | Peris-taltic | Peris-taltic | - | Peris-taltic | Peris-taltic | - |
| **Power pack** | | | | | | | | | | | | | |
| User interface | 2,8" Oled touchscreen | | | | | LCD screen | | LCD screen | | LCD screen | LCD screen | | LCD screen |
| Dosing pump (L/h) | 1,5 (x2) | | - | | | 0.4 or 1.5 | - | 1.5 or 5.0 | 1.5 or 5.0 | - | 0.4, 1.5 or 3.0 | 0.4, 1.5 or 3.0 | - |
| Main on/off switch | ✓ | | ✓ | | | ✓ | | ✓ | | ✓ | ✓ | | ✓ |
| Over-feed alarm | ✓ | | ✓ | | | ✓ | | ✓ | | ✓ | ✓ | | ✓ |
| Alarm relay (for remote info) | - | | - | | | ✓ | | ✓ | | ✓ | - | | - |
| Water temperature | ✓ | | ✓ | | | ✓ (optional PT100 input) | | ✓ (optional PT100 input) | | ✓ (optional PT100 input) | - | | - |
| Inputs - Outputs | 4 (digital) - 4 (relays) Relay Box included | | 4 (digital) - 4 (relays) | | | - | | - | - | - | - | - | - |
| **Sensors / Regulation** | | | | | | | | | | | | | |
| Sensor(s) provided | ✓ | | ✓ (pH & ORP or pH & PPM) | | | ✓ | ✓ | - (pH kit) | - (ORP kit) | - (ORP kit) | ✓ | ✓ | ✓ |
| Sensor(s) installation | Panel | | In line or Panel (depends on model) | | | In line | In line | In line | In line | In line | In line | In line | In line |
| Range measurement | 0.0-9.9 pH | 0-999 mV | 0.0-9.9 pH | 0-999 mV | 0.0-5.0 ppm | 0.0-14.0 pH | 0-999 mV | 0.0-14.0 pH | 0-999 mV | 0-999 mV | 0.0-14.0 pH | 0-1000 mV | 0-1000 mV |
| Automatic calibration | ✓ | ✓ | ✓ | ✓ | ✓ | ✓ | ✓ | ✓ | ✓ | ✓ | ✓ | ✓ | ✓ |
| **Connectivity / App control** | | | | | | | | | | | | | |
| IoT connecti-vity: App control | ✓ (embedded) Fluidra Pool | | | | | - | | - | - | - | - | - | - |
| IoT connecti-vity: Compatible with Connect & Go automation | NN Thing | | | | | | | | | | - | - | - |
| Warranty | 3 years | | 3 years | | | 2 years | | 2 years | | 2 years | 2 years | | 2 years |

CHEMICAL DOSING SYSTEMS

# Control Connect

**+ All-in-one multi-parameters regulation**
**+ Limitess control**
**+ Integrated connectivity**

3 YEAR WARRANTY

FLUIDRA POOL

MADE IN EUROPE

## DESCRIPTION

- Connected via built-in WiFi and Fluidra Pool app
- Available as an in-line, on a panel with measuring chamber and in an all-in-one integrated version
- 4 digital inputs and 4 digital outputs (relays) to control the filtration pump, heat pump, lighting, filling system, etc.
- Water temperature reading as standard
- Flow sensor fitted as standard
- Equipped with dedicated outputs for pH and chlorine dosing pumps (included on the all-in-one version, not included on others - kit 70054 can be used)

- App Control:Yes
- App Control Type:Fluidra Pool

## ACCESSORIES INCLUDED

- Flow switch

## OPTIONAL ACCESSORIES

- Module S-Driver SD-Pump (pH)-70054
- Module S-Driver SD-VSP-73471
- Relay Box-72454

## DESCRIPTION

| Name | Sku Reference |
|---|---|
| Control Connect pH/ORP/Temp panel | 76750 |
| Control Connect pH/ORP/Temp in-line | 76749 |
| Control Connect pH/PPM/Temp panel | 76751 |

## TECHNICAL FEATURES

| Name | Control Connect pH/ORP/Temp panel | Control Connect pH/ORP/Temp in-line | Control Connect pH/PPM/Temp panel |
|---|---|---|---|
| Sku Reference | 76750 | 76749 | 76751 |
| Dosage | Acid or Alkaline | | Liquid chlorine |
| Electric Power Supply | 220-240 V / 50-60 Hz | | |
| Reading scale | 0,0 - 9,9 pH 0 - 999 mV | | 0,0 - 5,0 ppm |
| Reading accuracy | 0,01 pH - 1 mV | | 0,01 ppm |
| Product Dimensions | x x cm | | |

70054

72454

73471

71537
pH/ORP/Temp.
stand-alone

71538
pH/ORP/Temp.
complete panel

71539
pH/PPM/Temp.
complete panel

CHEMICAL DOSING SYSTEMS

# Control Connect All-In-One

+ All Inclusive multiparameter solution
+ Ready-to-Install pool control
+ Premium grade
+ Easy to use: New user features for a holistic pool control

## ACCESSORIES INCLUDED

- pH & ORP glass sensors
- peristaltic dosing pump 1,5L/h x2
- Relay Box to wire 4 outputs

## OPTIONAL ACCESSORIES

- Module S-Driver SD-VSP-73471

2 YEAR WARRANTY

FLUIDRA POOL

MADE IN EUROPE

## DESCRIPTION

| Name | Sku Reference |
|---|---|
| Control Connect All-In-One | 76752 |

## TECHNICAL FEATURES

| Name | Control Connect All-In-One |
|---|---|
| Sku Reference | 76752 |
| Dosage | Acid or Alkaline + Liquid chlorine |
| Reading scale | 0,0 - 9,9 pH 0 - 999 mV |
| Reading accuracy | 0,01 pH - 1 mV |
| Product Dimensions | 41 x 55 cm |

MADE IN EUROPE

SALT WATER CHLORINATORS

# Relay box

## DESCRIPTION

- 4 power outputs (filtration pump, heater, lighting, etc.)
- IP55 waterproof enclosure
- All outputs fused
- Control functions :

1 x 230 Vac output for :
- Filter pump up to 3 HP
- Or any device up to 10A / 2.3 kW

3 x 230 Vac outputs for :
- Filter pump up to 1/3 HP
- Any appliance up to 6.5A / 1.5 kW

| Name | Sku Reference |
|---|---|
| Relay Box | 72454 |

2 YEAR WARRANTY

MADE IN EUROPE

CHEMICAL DOSING SYSTEMS

# Dual pH EV

## DESCRIPTION

- Automatic pH & ORP control and dosing system.
- Measurement range of 0–14 (pH) and 0–1000 mV (Redox).
- Includes full installation kit.
- Plastic casing with IP65 protection rating.
- Digital screen showing pH, ORP and temperature (optional Pt100)
- Remote on-off input (230 VAC) that keeps display ON for calibration.
- Chemical product level inlet.
- Alarm relay.

| Name | Sku Reference |
|---|---|
| Dual pH-EV Basic Control Plus 1,5 L/h | 66180 |
| Spa pH-EV Basic Control Plus 0,4 L/h | 66181 |

CHEMICAL DOSING SYSTEMS

# Control Basic Plus

2 YEAR WARRANTY

MADE IN EUROPE

## DESCRIPTION

Supplied without sensors or calibration solutions. Installation kit included
- Plastic housing with IP-65 protection rating
- Backlit LCD display comprising 2 lines and 16 characters
- Self-calibration of sensors
- Quality control of sensors
- Dosing pause during alarms and notification by a blinking LED
- Proportional dosing.
- Adjustable set point
- Flow rate: 1,5 l/h or 5 l/h
- Back pressure: 1.5 bar
- pH measurement range: 0.00 to 14.00
- Redox measurement range: -999 to + 999 mV.
- Switch
- Alarm relay
- Minimum chemical product level input
- PT100 temperature inlet (optional sensor)

## OPTIONAL ACCESSORIES

- Flange for PT100-66759
- pH sensor with calibration solutions-36004
- Rx Electrode for Control Basic, Redox Basic EV and OPTIMA pumps-36005
- PT100 sensor-66758

## DESCRIPTION

| Name | Sku Reference |
|---|---|
| Control Basic 1,5 L/h | 66159 |
| Control Basic 5,0 L/h | 66160 |

## TECHNICAL FEATURES

| Name | Control Basic 1,5 L/h | Control Basic 5,0 L/h |
|---|---|---|
| Sku Reference | 66159 | 66160 |
| Dosage | Acid or Alkaline | |

CHEMICAL DOSING SYSTEMS

# Redox basic Plus

2 YEAR WARRANTY

MADE IN EUROPE

## DESCRIPTION

Supplied without sensors or calibration solutions. Installation kit included.
- Plastic housing with IP-65 protection rating
- Backlit LCD display comprising 2 lines and 16 characters.
- Self-calibration of sensors.
- Quality control of sensors.
- Dosing pause during alarms and notification by a blinking LED.
- Proportional dosing.
- Adjustable set point.
- Redox measurement range: -999 to + 999 mV.
- Switch.
- Alarm relay.
- Output relay for external component.
- Minimum chemical product level input.
- PT100 temperature input (optional sensor).

## ACCESSORIES INCLUDED

- pH / Redox sensor (depending on model)
- Sensor holder
- Buffer solution
- Suction and impulse tubes

## OPTIONAL ACCESSORIES

- PT100 sensor-66758
- Flange for PT100-66759
- Rx Electrode for Control Basic, Redox Basic EV and OPTIMA pumps-36005

## DESCRIPTION

| Name | Sku Reference |
|---|---|
| Redox Basic EV Plus | 66161 |

## TECHNICAL FEATURES

| Name | Redox Basic EV Plus |
|---|---|
| Sku Reference | 66161 |
| Dosage | Liquid chlorine |

CHEMICAL DOSING SYSTEMS

# Control Basic Next

## DESCRIPTION

General technical features:
- Automatic pH or redox control and dosing system
- Measurement range of 0–14 (pH) and 0–100 mV (redox)
- It comes with a full installation kit, made up of a pH or redox sensor (depending on the model), a sensor holder, standard solutions, suction and blow pipes, and suction and blow pipe fittings
- ABS casing with IP65 protection rating
- Digital display screen for both pH and redox readings
- Remote on-off input (230 VAC) that keeps display lit up for calibration and programming

2 YEAR WARRANTY

MADE IN EUROPE

## ACCESSORIES INCLUDED

- pH / Redox sensor (depending on model)
- Sensor holder
- Buffer solution
- Suction and impulse tubes
- Suction and impulse connections

## DESCRIPTION

| Name | Sku Reference |
|---|---|
| Control Basic Next pH 1,5 L/h | 66162 |
| Control Basic Next pH 3,0 L/h | 66336 |
| Control Basic Next ORP 1,5 L/h | 66163 |
| Control Basic Next ORP 3 L/h | 66337 |
| Control Basic Next Spa 0,4 L/h | 66156 |
| Control Basic Next Spa ORP 0,4 L/h | 66157 |

## TECHNICAL FEATURES

| Name | Control Basic Next pH 1,5 L/h | Control Basic Next pH 3,0 L/h | Control Basic Next ORP 1,5 L/h | Control Basic Next ORP 3 L/h | Control Basic Next Spa 0,4 L/h | Control Basic Next Spa ORP 0,4 L/h |
|---|---|---|---|---|---|---|
| Sku Reference | 66162 | 66336 | 66163 | 66337 | 66156 | 66157 |
| Dosage | Acid or Alkaline | | Liquid chlorine | | Acid or Alkaline | |

CHEMICAL DOSING SYSTEMS

# Redox Basic Next

## DESCRIPTION

General technical features:
- Automatic redox control and dosing system
- Measurement range of 0-1000 mV
- It comes with basic installation kit, made of an ORP sensor, a sensor holder and standard buffer solution
(no piping kit as device is made to control a separate sanitizer appliance)
- ABS casing with IP65 protection rating
- Digital screen that gives redox readings
- Remote on-off input (230 VAC) that keeps display lit up for calibration and programming

2 YEAR WARRANTY

MADE IN EUROPE

## ACCESSORIES INCLUDED

- pH / Redox sensor (depending on model)
- Sensor holder
- Buffer solution
- Suction and impulse tubes
- Suction and impulse connections

## OPTIONAL ACCESSORIES

- PT100 sensor-66758
- Flange for PT100-66759

## DESCRIPTION

| Name | Sku Reference |
|---|---|
| Redox Basic EV Next | 66174 |

## TECHNICAL FEATURES

| Name | Redox Basic EV Next |
|---|---|
| Sku Reference | 66174 |
| Dosage | Liquid chlorine |

| Installation kit | | | | | |
|---|---|---|---|---|---|
| Control Basic Next | ▪ | ▪ | ▪ | ▪ | ▪ |
| Redox Basic Next | | | | ▪ | ▪ |

| Sensors kits | | | | |
|---|---|---|---|---|
| pH sensor with calibration solutions (Code: 36004) | ▪ | | ▪ | |
| Redox sensor with calibration solutions (Code: 36005) | | ▪ | | ▪ |

DOSING EQUIPMENT

# Peristatic pump

## DESCRIPTION

Peristaltic pump with flow adjustment from 10% to 100%. The flow is controlled adjusting the motor speed by means of a potentiometer placed on the front panel.
Power connection of 90/260 V at 50/60 Hz.

MADE IN EUROPE

| Name | Sku Reference |
|---|---|
| Peristaltic pump 4 L/H 3 Bar | 57179 |
| Peristaltic pump 12 L/H 1 Bar | 57178 |

CHEMICAL DOSING SYSTEMS

# Dossi

MADE IN EUROPE

## DESCRIPTION

Dossi-5 and Dossi-10 in-line : Bromine dispenser. Manufactured from unalterable plastic materials (ABS). With regulation valve, manual purge, Venturi automatic depression purge, and opening key. For pools up to 45 m³ with the Dossi-5 dispenser and up to 90 m³ Dossi-10 dispenser. Connections 11/2". Ø 200 mm.
Dossi-5 and Dossi-10 off-line : Bromine and chlorine feeder. Manufactured from unalterable plastic materials (ABS). Approximate capacity: 5 kg of tablets for Dossi-5 and 10 kg for Dossi-10. Supplied with two valves in order to stop the water flow. Connections Ø 20 mm.
3.5 kg Dossi-3 : Chlorine and bromine feeder. Manufactured from unalterable plastic materials (ABS). Approximate capacity: 3.5 kg of tablets. Lid closing with double safety system. Easy to operate regulation valves. For pools up to 60 m³ with Chlorine and up to 30 m³ with bromine.

| Name | Recommended Pool Volume | Sku Reference | Packaged Product Weight |
|---|---|---|---|
| Dossi-5 in-line | 45 m³ (Br) | 21438 | 3,6kg |
| Dossi-10 in-line | 80 m³ (Br) | 21439 | 4,8kg |
| Off-Line 5 kg | 80 m³ (Cl)<br>50 m³ (Br) | 01413 | 3,7kg |
| Dossi-10 off-line | 160 m³ (Cl)<br>100 m³ (Br) | 43998 | 4,9kg |
| Dossi-3 in-line | 60 m³ (Cl)<br>30 m³ (Br) | 24429 | 1,8kg |
| Dossi-3 off-line | 60 m³ (Cl)<br>30 m³ (Br) | 24430 | 1,9kg |

DOSING EQUIPMENT

# Floating Dispenser

## DESCRIPTION

Allows for dosing and easy chemical product handling in the pool.

| Name | Sku Reference |
|---|---|
| Floating dispenser for 200 g tablets | 36620 |
| Floating dispenser 250 g | 69668 |
| Floating dispenser for 20 g tablets | 38629 |
| Floating dispenser for 200 g tablets | 38630 |

ACCESSORIES FOR AUTOMATIC WATER TREATMENT

# Quick Test Strips

## DESCRIPTION

Salt test strips for checking salt levels. Salt levels must be checked on a regular basis as the water is renewed.

| Name | Sku Reference |
|---|---|
| 10 strips read sodium chloride (salt) from 400 - 7000 ppm | 07937 |

# 5 RANGES OF WATER TREATMENT PRODUCTS

Water is an unstable and continually changing element, particularly in a swimming pool. Physico-chemical treatment of the water is therefore necessary to make it healthy, clear, balanced, disinfected and antibacterial.

**Zodiac® offers 5 product families to free swimming pool owners from the burdens of water treatment:**

- **Stand-alone pH regulators** to provide the optimum pH whatever the type of disinfection used,
- **Stand-alone ORP regulators** to manage chlorine disinfection automatically,
- **Easy-to-Install, long-lasting and upgradeable salt chlorinators** (specific models with regulations, or optional add-ons regulation modules on certain models), offered in 3 different levels of range,
- **Patented exclusive MagnaPool® solution** for a complete magnesium-based chlorination, focused on water clarity, bathing comfort and the environment (see specific pages),
- **Nature² mineral purifier for spas disinfection** with less chlorine.

## POSSIBLE COMBINATIONS OF THE DIFFERENT SYSTEMS

### Disinfection

Water disinfection that adapts to every need and every budget.

Chlor Expert | Ei² | EiSalt | eXPERT Standard, with pH or with pH/ORP regulations | eXO® iQ | eXO® iQ LS | Hydroxinator® iQ

### pH regulation

The basis of water treatment, adapted to each Zodiac® disinfection or chlorinator solutions.

pH Expert

pH Link | Dual Link (pH/ORP)

MagnaPool® Mineral Pool Science

MagnaPool® is an exclusive, magnesium-based chlorinator solution for incomparably gentle, pure and crystal clear water and unequalled bathing comfort.

MagnaPool® minerals + Crystal Clear filtration glass + Hydroxinator® iQ

# PH REGULATION SYSTEMS

## For perfect water balance

Zodiac pH regulation systems incorporate proportional dosing technology to **maintain an ideal pH automatically** for the comfort of bathers. For optimal water balance, it includes a function to adjust injection cycles depending on the total alkalinity (TAC) of the water. **A choice of 3 settings is available:**

| Low alkalinity | Standard alkalinity | High alkalinity |
|---|---|---|
| TAC < 10 °f (100 ppm $CaCO_3$) | Default setting | TAC > 15 °f (150 ppm $CaCO_3$) |

## > SAFE, AUTO-ADAPTIVE OPERATION

**Depending on the value measured by the sensor, Zodiac® pH regulation systems automatically adjust the pH of the swimming pool** up or down, using a peristaltic dosing pump.

The dosing time depends on **the difference between the pH of the swimming pool and the ideal pH (set point value).** The water balance in the swimming pool is maintained at the desired value without taking any action.

Zodiac® pH regulation systems are equipped **with an exclusive overdosing safety device** (called 'OFA') to prevent excessive injection. The safety device is adjustable and operates in 3 steps to determine whether or not it is necessary to inject correcting product.

### EXCLUSIVE AUTO-ADAPTIVE DOSING

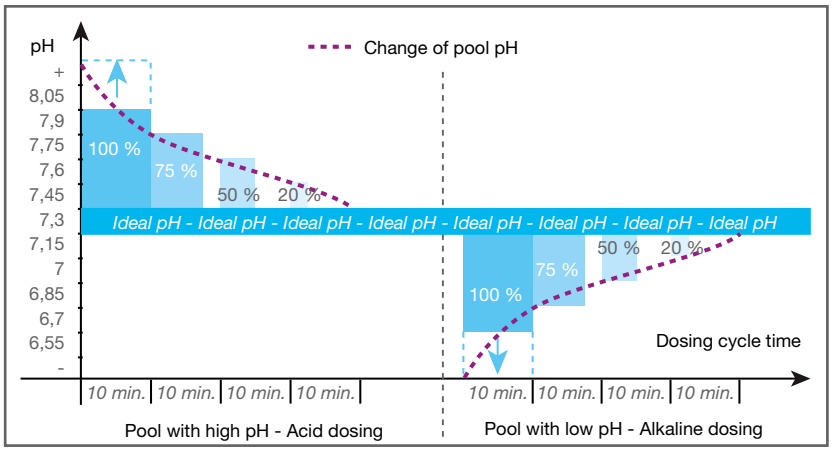


## > FOR GREATER COMFORT

**For the comfort of bathers, the pH of the swimming pool must be kept between 7.0 and 7.6:**

- Below this, the water is aggressive.
- Above this, larger doses of disinfectant are needed to maintain healthy water and combat the growth of algae.
- The ideal pH for the swimming pool water is also the average pH of the human body, and more especially the blood, which is between 7.35 and 7.45.

### PH SCALE

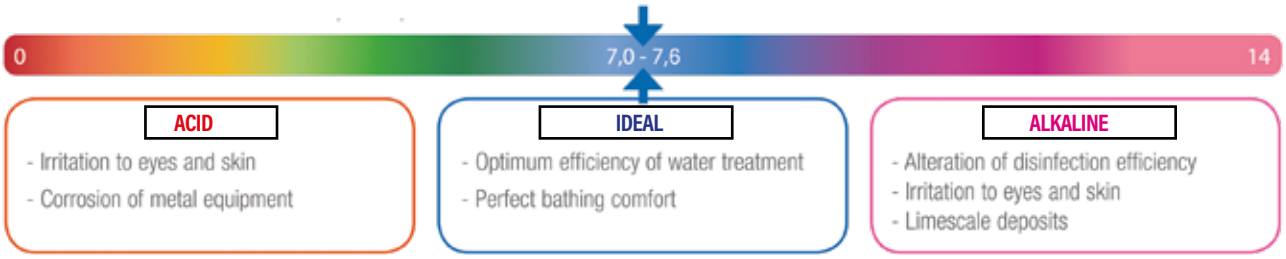


**DID YOU KNOW?**
The pH must be controlled and adjusted, whatever the disinfection system used. As a result, Zodiac pH regulation systems can be used in all types of pools.

CHEMICAL DOSING SYSTEMS

# pH Expert

**+ Automatic pH regulation**
**+ Accurate dosing**
**+ Anti-overdose protection**

2 YEAR WARRANTY

ALL TYPES OF POOLS

EASY INTALLATION

MADE IN EUROPE

## DESCRIPTION

- 1-line, backlit LCD screen in 6 languages (FR-EN-ES-DE-IT-NL)
  - Semi-automatic, 1 or 2 step(s) (Buffer solutions kit included)
  - Factory setting: pH = 7,4
  - Configurable 'OFA' three-level over-feed alarm (settings from 0 to 6 h, default 4 h)
  - Level sensor on intake pipe (equipped with anti-fumes cap)
  - Combined sensor, simple-junction and simple-porous, Ø12 mm glass body
  - Plumbing compatibility DN50 mm, DN63 mm
  - Protection index IP65

- User Interface:LCD Display

## ACCESSORIES INCLUDED

- pH Sensor
- Buffer solutions kit
- Plumbing kit
- Wall mounting kit
- Suction Pipe

## OPTIONAL ACCESSORIES

- Pod kit - optional extra for use with pH Expert or Chlor Expert-R0534900
- 63mm saddle clamp-R0839600
- Earthing anode-R0673800

## DESCRIPTION

| Name | Recommended Pool Volume | Sku Reference |
|---|---|---|
| pH Expert | 150m³ | W500708 |

## TECHNICAL FEATURES

| Name | pH Expert |
|---|---|
| Sku Reference | W500708 |
| Dosage | Acid or Alkaline |
| Electric Power Supply | 220-240 V / 1 / 50-60 Hz |
| Reading scale | 0 - 1000 mV |
| Reading accuracy | 10 mV |
| Sensor tolerance temperature | 0-60 |
| Sensor tolerance water speed | ≤ 2 |
| Peristaltic pH pump flow | 1,5 |
| Minimum water temperature | 5°C |
| Maximum water temperature | 40°C |
| Safety | "Configurable 'OFA' three-level over-feed alarm (settings from 0 to 6 h, default 4 h) Level sensor on intake pipe (equipped with anti-fumes cap)" |
| Product Dimensions | 19,5 x 23,6 x 8,5cm |

pH value is essential to maintain chlorine effectiveness:

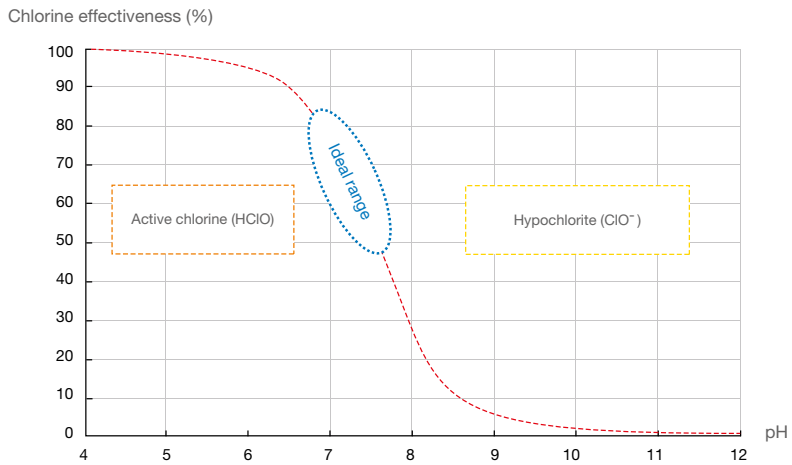

# ORP REGULATION SYSTEMS

## For automated chlorination

Zodiac ORP regulation systems incorporate proportional dosing technology to **maintain an ideal chlorine level automatically** for the comfort of bathers. It uses the "ORP" method (also called Redox), otherwise known as measuring the "disinfectant capacity of the water".

## > SAFE, AUTO-ADAPTIVE OPERATION

**Depending on the ORP value measured by the sensor, Zodiac® ORP regulation systems will automatically adjust the chlorine level** using a peristaltic dosing pump.

The dosing time depends on **the difference between the ORP value of the swimming pool water and the optimum value (set point value).** The quantities of liquid chlorine injected are automatically adjusted to meet the demand for disinfection.

Zodiac® ORP regulation systems are equipped **with an exclusive overdosing safety device (called 'OFA') to prevent excessive injection.**
The safety device is adjustable and operates in 3 steps to determine whether or not it is necessary to inject liquid chlorine.

### EXCLUSIVE AUTO-ADAPTIVE DOSING

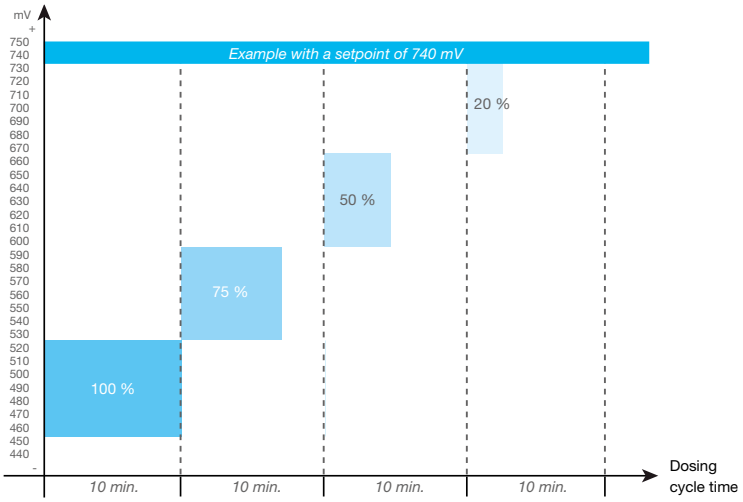


## > FOR GREATER COMFORT

- For the comfort of bathers, the ORP level of the water must be between 600 mV and 750 mV; this is equivalent to about 1.0 mg/L free chlorine at pH 7.4 (variable depending on the stabiliser concentration).
- To maintain optimum water quality, the pH regulation system (pH Expert) is the essential partner to the ORP regulation system. **In this case the** 'POD kit' will be the ideal option for a simple installation and accurate measurement.

### DID YOU KNOW?

ORP (and by extrapolation, the chlorine level) can vary depending on several parameters.

**For optimum treatment, 5 values must be met:**

- pH = 7.0 to 7.6
- TAC (alkalinity) = 8 to 15 °f (or 80 to 150 ppm $CaCO_3$)
- Cyanuric acid (stabilizer) < 30 ppm
- Water temperature = 20°C to 28°C
- Borehole water and rainwater prohibited

It is essential to check and adjust these parameters, as necessary, to ensure optimum operation of the ORP regulation system.

CHEMICAL DOSING SYSTEMS

# Chlor Expert

**+ Automatic chlorine regulation**
**+ Accurate dosing**
**+ Anti-overdose protection**

2 YEAR WARRANTY | EASY INTALLATION | MADE IN EUROPE

## DESCRIPTION

- 1-line, backlit LCD screen in 6 languages (FR-EN-ES-DE-IT-NL)
  - Semi-automatic, 1 or 2 step(s) (Buffer solutions kit included)
  - Factory setting: pH = 7,4
  - Configurable 'OFA' three-level over-feed alarm (settings from 0 to 6 h, default 4 h)
  - Level sensor on intake pipe (equipped with anti-fumes cap)
  - Combined sensor, simple-junction and simple-porous, Ø12 mm glass body
  - Plumbing compatibility DN50 mm, DN63 mm
  - Protection index IP65

- User Interface:LCD Display

## ACCESSORIES INCLUDED

- ORP Sensor
- Buffer solutions kit
- Plumbing kit
- Wall mounting kit
- Suction Pipe

## OPTIONAL ACCESSORIES

- Pod kit - optional extra for use with pH Expert or Chlor Expert-R0534900
- 63mm saddle clamp-R0839600
- Earthing anode-R0673800

## DESCRIPTION

| Name | Recommended Pool Volume | Sku Reference |
|---|---|---|
| Chlor Expert | 150m³ | W500709 |

## TECHNICAL FEATURES

| Name | Chlor Expert |
|---|---|
| Sku Reference | W500709 |
| Dosage | Liquid chlorine |
| Electric Power Supply | 220-240 V / 1 / 50-60 Hz |
| Reading scale | 0 - 1000 mV |
| Reading accuracy | 0,1 pH |
| Sensor tolerance temperature | 0-60 |
| Sensor tolerance water speed | ≤ 2 |
| Peristaltic pH pump flow | 1,5 |
| Minimum water temperature | 5°C |
| Maximum water temperature | 40°C |
| Safety | "Configurable 'OFA' three-level over-feed alarm (settings from 0 to 6 h, default 4 h) Level sensor on intake pipe (equipped with anti-fumes cap)" |
| Product Dimensions | 19,5 x 23,6 x 8,5cm |

pH effect on ORP, and influence of CHLORINE STABILIZER:

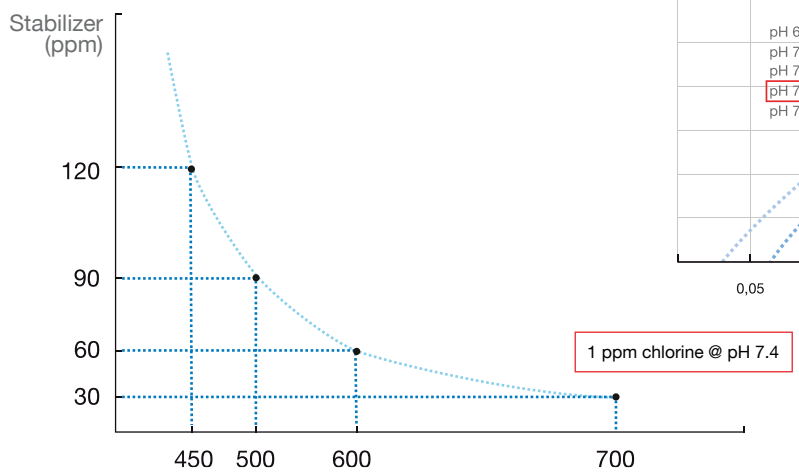


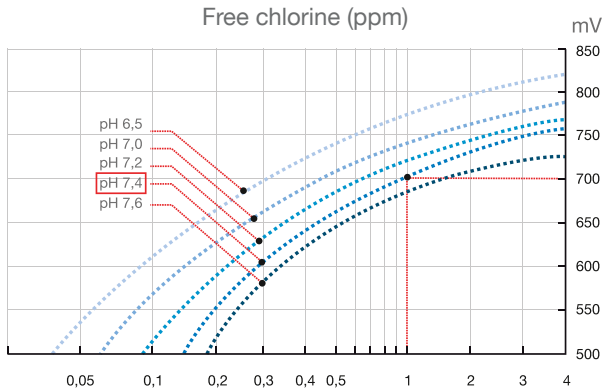

# SALT WATER CHLORINATORS

## Automatic, easy and efficient disinfection

Simple to install and use, salt water chlorinators provide complete treatment with reduced maintenance.

## > HOW DOES IT WORK?

**The principle of salt electrolysis is simple.** The swimming pool water is very slightly saline (from 2 to 4 g/L, meaning from 9 to 18 times less than sea water). By an electrolysis reaction across the cell of the system, chloride ions - from the salt dissolved in the water - are converted to chlorine gas, a powerful disinfectant that dissolves in the water instantaneously. **The resulting active chlorine (HOCl) destroys all the micro-organisms in the cell and provides an adequate level of free chlorine in the pool.** The active chlorine, which is removed by combining with organic matter and under the effect of UV rays in sunlight, is continuously renewed by the cell without action by the user.

For optimum efficiency of the chlorinator, **the pH of the swimming pool must be kept between 7.0 and 7.6.**
All Zodiac® chlorinators have cells with **high quality, long-lasting titanium electrodes,** ensuring peace of mind for the user.

### CYCLIC REACTION OF SALT ELECTROLYSIS

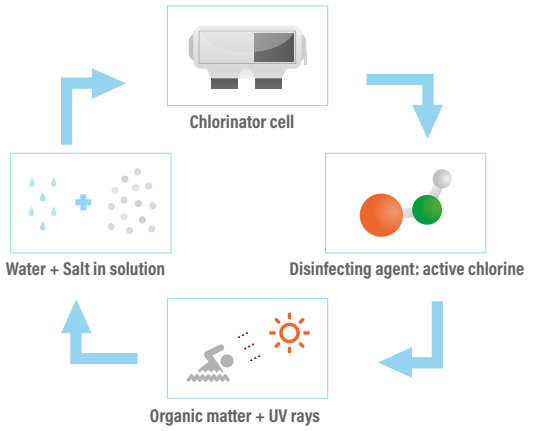


INCONDITIONNELLE GARANTIE INCONDITIONNELLE

**REFERENCE POINT**
Zodiac® control units and salt chlorinator cells will be repaired or exchanged during the guarantee period, whatever the causes of damage.

## SELECTION GUIDE

| | Ei² | EiSalt | eXPERT | eXO® iQ | eXO® iQ LS |
|---|---|---|---|---|---|
| | | | | | |
| Volume of water treated in m³ (temperate climate, filtration 8 h/day) | 50 / 90 / 110 | 50 / 90 / 140 | 30 / 50 / 90 / 140 / 180 | 40 / 70 / 100 / 160 | 40 / 70 |
| Chlorine production in g/h | 12 - 20 - 25 | 12 - 21 - 30 | 7 - 12 - 21 - 30 - 40 | 10 - 18 - 22 - 35 | 10 - 18 |
| Salinity in g/L (min... / required / ... max) | 3,0... / 4,0 / ...10 | 3,5... / 5,0 / ...10 | 3,5... / 4,0 / ...10 | 3,3... / 4,0 / ...13 | 1,6... / 2,0 / ...10 |
| Cell type | Quick Fix | L shape | L shape | Inverted U | Inverted U |
| Working life of cell* | 7 500 h | 8 000 h | 10 000 h | 10 000 h | 10 000 h |
| Polarity reversal | 5 h | 2 / 3 h | 2 / 3 / 4 / 7 h | 2 to 8 h | 2 to 8 h |
| Unit protection rating | IPX5 | IPX4 | IP65 | IP43 | IP43 |
| User interface | LEDs | LEDs | Touch-screen & LCD | Backlit LCD screen | Backlit LCD screen |
| Number of interface languages | - | - | - | 11 | 11 |
| Boost mode / Low mode (=cover contact) | - / ✓ | - / ✓ | ✓/ ✓ | ✓/ ✓ | ✓/ ✓ |
| Timers | - | ✓ | - | ✓ | ✓ |
| User information | LEDs | LEDs | Warning icons | Messages + LEDs | Messages + LEDs |
| Flow rate detection | Gas sensor | Gas sensor | Flow switch | Flow switch | Flow switch |
| pH regulation | - | - | Yes (specific model) | Optional pH Link module | Optional pH Link module |
| pH & ORP regulation | - | - | Yes (specific model) | Optional Dual Link module | Optional Dual Link module |
| Connectivity / App control | - | - | ✓ Fluidra Pool (with optional iQBridge RS) | ✓ (embedded) iAquaLink | ✓ (embedded) iAquaLink |
| Unconditionnal warranty (Power pack & Cell) | 2 years | 2 years | 2 years | 3 years | 3 years |
| Optional accessories | • Winterizing cap<br>• Locking ring wrench | - | • iQBridge RS WiFi gateway | • pH Link module<br>• Dual Link module | • pH Link module<br>• Dual Link module |

* Under good operating conditions.

ZODIAC®

SALT WATER CHLORINATORS

# Ei²

+ Long lasting
+ Suitable for all installations
+ Easy to install

2 YEAR WARRANTY · ALL TYPES OF POOLS · UNCONDITIONAL WARRANTY · EASY INTALLATION · TITANE INSIDE · CHEMICAL REDUCTION

## DESCRIPTION

- Normal; Low (Adjustable cover mode from 0 to 20 %)
  - Controlled by filtration timer
  - Plumbing compatibility DN50 mm, DN63 mm, 1 ½" (48 mm)
- User Interface:LCD LED Display

## ACCESSORIES INCLUDED

- Installation Kit

## OPTIONAL ACCESSORIES

- Locking ring wrench-R0769900
- Winterizing cap for cell-R0770100

## DESCRIPTION

| Name | Recommended Pool Volume | Nominal Chlorine Production | Sku Reference |
|---|---|---|---|
| Ei² 12 | 50m³ | 12g/h | WW000244 |
| Ei² 20 | 90m³ | 20g/h | WW000245 |
| Ei² 25 | 110m³ | 25g/h | WW000246 |

## TECHNICAL FEATURES

| Name | Ei² 12 | Ei² 20 | Ei² 25 |
|---|---|---|---|
| Sku Reference | WW000244 | WW000245 | WW000246 |
| Cell Position | Vertical & Horizontal | | |
| Polarity reversal | Yes: 5 h | | |
| Required Salt level Minimum | 4 - 3,0g/L | | |
| Electric Power Supply | 220-240 V / 1 / 50-60 Hz | | |
| Power consumption (W) | 70 | 110 | 140 |
| Working life of cells | 7.500 h (titanium plates, SC6 ruthenium coating) | | |
| Length of the cell cable | 1,8 | | |
| Minimum water temperature | 5°C | | |
| Maximum water temperature | 40°C | | |
| Safety | "Low salt' indicator light: Reduced production to protect the electrode 'No flow' indicator light: Production is interrupted as long as conditions are not ideal" | | |
| Cell Size | 16.5 x 22.5 x 12.5cm | | |
| Control Box Size | 28.5 x 40.5 x 12.5cm | | |

SALT WATER CHLORINATORS

# EiSalt

+ Long lasting
+ Suitable for all installations
+ Safety first

2 YEAR WARRANTY
ALL TYPES OF POOLS
UNCONDITIONAL WARRANTY
EASY INTALLATION
TITANE INSIDE
CHEMICAL REDUCTION
MADE IN EUROPE

## DESCRIPTION

- Normal; Low (cover at 10 %)
- ORP Regulation : Dedicated dry contact for slave mode (external regulation)
- Controlled by filtration timer
- Plumbing compatibility DN63 mm, DN50 mm (using reducers)

- User Interface:LCD LED Display

## DESCRIPTION

| Name | Recommended Pool Volume | Nominal Chlorine Production | Sku Reference |
|---|---|---|---|
| EiSalt 12 | 50m³ | 12g/h | 75460 |
| EiSalt 21 | 90m³ | 21g/h | 75461 |
| EiSalt 30 | 140m³ | 30g/h | 75462 |

## TECHNICAL FEATURES

| Name | EiSalt 12 | EiSalt 21 | EiSalt 30 |
|---|---|---|---|
| Sku Reference | 75460 | 75461 | 75462 |
| Cell Position | Vertical & Horizontal | | |
| Polarity reversal | Yes: adjustable (2 or 3h) | | |
| Required Salt level Minimum | 5 - 3,5g/L | | |
| Electric Power Supply | 220-240 V / 50-60 Hz | 220-240 V / 1 / 50-60 Hz | |
| Power consumption (W) | 80 | 100 | 180 |
| Working life of cells | 8.000 h (titanium plates, SC6 ruthenium coating) | | |
| Length of the cell cable | 1,5 | | |
| Minimum water temperature | 5°C | | |
| Maximum water temperature | 40°C | | |
| Safety | "Low salt' indicator light: Reduced production to protect the electrode All indicators blinking: Production is interrupted as long as conditions are not ideal" | | |
| Cell Size | 21 x 34 x 11,6cm | | |
| Control Box Size | 20 x 30 x 13cm | | |

# eXPERT

## Versatile salt water treatment

2 YEAR WARRANTY

UNCONDITIONNAL WARRANTY UNCONDITIONNAL

### EASE OF USE

With a large touchscreen and oversized fonts, eXPERT makes it easy to set up and adjust. Check your pool's status at-a-glance with the user-friendly information display.

### MAXIMUM VERSATILITY

Available in a wide range of options to treat pool volumes up to 180 $m^3$, eXPERT guarantees long-lasting water treatment thanks to its sturdy cell.

### AUTONOMOUS WATER QUALITY

eXPERT provides full water treatment features with water balance management (pH regulation) and automatic regulation of chlorination (ORP regulation)*.

* Depending on the model.

## > DID YOU KNOW ?

### BRING CONNECTIVITY WITH IQBRIDGE RS

eXPERT can be remotely controled with Fluidra Pool free app using the optional iQBridge RS for anytime & anywhere management . iQBridge RS is a plug & play WiFi gateway to easily connect eXPERT to the homeowner WiFi network and benefit from Fluidra Pool app control experience.
See "Internet of Pools" section for more details about iQBridge RS and Fluidra Pool app benefits.

FLUIDRA POOL

### WHICH MODELS ?

All eXPERT manufactured starting 2023. The power pack is equipped with a dedicated plug to connect iQBridge RS.

## > A UNIQUE INTERFACE TO ADAPT TO EACH NEED

LARGE TOUCH PANEL WITH OVERSIZE FONTS

BOOST MODE
LOW MODE (COVER)

FLUIDRA POOL

REMOTE CONTROL WITH FLUIDRA POOL APP USING OPTIONAL IQBRIDGE RS

WATERTIGHT POWER PACK

AVAILABLE WITH pH OR pH/ORP REGULATION(S), USING HIGH QUALITY GLASS SENSORS

CHLORINE OUTPUT FROM 7 UP TO 40 g/h

# > 1 RANGE, 3 SOLUTIONS

### 1. Salt water chlorinator

Autonomous
pool disinfection

### 2. Salt Water chlorinator + pH regulation

In addition to the autonomous disinfection, this model automatically manages water balance. It injects pH corrective product if needed

### 3. Salt water chlorinator + pH & ORP regulations

In addition to pH management, this model automatically manages the chlorination thanks to its ORP regulation for a complete water treatment.

## SELECTION GUIDE

| | eXPERT 7 | eXPERT 12 | eXPERT 21 | eXPERT 30 | eXPERT 40 |
|---|---|---|---|---|---|
| Chlorine output (g/h) | 7 | 12 | 21 | 30 | 40 |
| Maximum treated pool volume (temperate climate with water up to 28°C, disinfection capacity linked to the daily filtration time, here for 8 h/day) ($m^3$) | 30 $m^3$ | 50 $m^3$ | 90 $m^3$ | 140 $m^3$ | 180 $m^3$ |
| Recommended salinity (& min-max threshold) | 4 g/L (4 - 10 g/L) | | | | |
| Salinity reading | Yes | | | | |
| Water temperature reading | Yes | | | | |
| Boost mode | 24 hours shock chlorination | | | | |
| Low (cover) mode | Reduced chlorination when pool cover is closed (adjustable) | | | | |
| Flow safety | Mechanical flow switch | | | | |
| pH regulation and dosing | Yes, specific "pH" models | | | | |
| ORP regulation | Yes, specific "pH/ORP" models | | | | |
| App control | Fluidra Pool (with optional iQBridge RS WiFi gateway) | | | | |
| Warranty, power pack & cell | 2 years, unconditional | | | | |
| Warranty, sensors | 2 years (pH sensor) / 1 year (ORP gold sensor) | | | | |

SALT WATER CHLORINATORS

# eXPERT

+ Ease of use
+ Maximum versatility
+ Autonomous water quality

2 YEAR WARRANTY · ALL TYPES OF POOLS · UNCONDITIONAL WARRANTY · TITANE INSIDE · CHEMICAL REDUCTION · FLUIDRA POOL · MADE IN EUROPE

## DESCRIPTION

- Calibration : Semi-automatic at 2 points pH 4 and pH 7 & ORP 470 mV (buffer solutions included)
- Factory setting: pH = 7,2 / ORP = 700 mV
- Normal, Boost ( 100% during 24h) & Low (adjustable cover mode from 10 to 90 %)
- Plumbing compatibility DN50 mm, DN63 mm
- Protection index IP65
- Controlled by filtration timer
- Combined sensor, simple-junction and simple-porous, Ø12 mm glass body

- App Control:Yes (optional with iQ BridgeRS)
- App Control Type:Fluidra Pool
- User Interface:LCD and touch buttons

## ACCESSORIES INCLUDED

- Installation Kit
- Flow switch installation kit
- pH and pH/ORP versions: pH pump kit
- pH version: pH sensor kit with buffer solutions
- pH/ORP version: pH & ORP sensors kit with buffer solutions

## OPTIONAL ACCESSORIES

- iQBridge RS-75042

## DESCRIPTION

| Name | Recommended Pool Volume | Nominal Chlorine Production | Sku Reference |
|---|---|---|---|
| eXPERT 7 | 30m³ | 7g/h | 74183 |
| eXPERT 12 | 50m³ | 12g/h | 74184 |
| eXPERT 21 | 100m³ | 21g/h | 74185 |
| eXPERT 30 | 140m³ | 30g/h | 74186 |
| eXPERT 40 | 180m³ | 40g/h | 74187 |
| eXPERT 7 pH | 30m³ | 7g/h | 74188 |
| eXPERT 12 pH | 50m³ | 12g/h | 74189 |
| eXPERT 21 pH | 100m³ | 21g/h | 74190 |
| eXPERT 30 pH | 140m³ | 30g/h | 74191 |
| eXPERT 40 pH | 180m³ | 40g/h | 74192 |
| eXPERT 7 pH/ORP | 30m³ | 7g/h | 74193 |
| eXPERT 12 pH/ORP | 50m³ | 12g/h | 74194 |
| eXPERT 21 pH/ORP | 100m³ | 21g/h | 74195 |
| eXPERT 30 pH/ORP | 140m³ | 30g/h | 74196 |
| eXPERT 40 pH/ORP | 180m³ | 40g/h | 74197 |

## TECHNICAL FEATURES

| Name | eXPERT 7 | eXPERT 12 | eXPERT 21 | eXPERT 30 | eXPERT 40 | eXPERT 7 pH | eXPERT 12 pH | eXPERT 21 pH | eXPERT 30 pH | eXPERT 40 pH | eXPERT 7 pH/ORP | eXPERT 12 pH/ORP | eXPERT 21 pH/ORP | eXPERT 30 pH/ORP |
|---|---|---|---|---|---|---|---|---|---|---|---|---|---|---|
| Sku Reference | 74183 | 74184 | 74185 | 74186 | 74187 | 74188 | 74189 | 74190 | 74191 | 74192 | 74193 | 74194 | 74195 | 74196 |
| Cell Position | Vertical | | | | | | | | | | | | | |
| Polarity reversal | Yes: 2, 3, 4 or 7 h (default 2 h) | | | | | | | | | | | | | |
| Required Salt level Minimum | 4 - 3,5g/L | | | | | | | | | | | | | |
| Electric Power Supply | 220-240 V / 50-60 Hz< | | | | | | | | | | | | | |
| Power consumption (W) | 46 | 92 | | 184 | 207 | 46 | 92 | | 184 | 207 | 46 | 92 | | 184 |
| Working life of cells | 10.000 h (titanium plates, SC6 ruthenium coating) | | | | | | | | | | | | | |
| Reading scale | 0,0 - 9,9 pH 0 - 999 mV | | | | | | | | | | | | | |
| Reading accuracy | 0.1 pH 1 mV | | | | | | | | | | | | | |
| Sensor tolerance temperature | 0-60 | | | | | | | | | | | | | |
| Sensor tolerance water speed | ≤ 2 | | | | | | | | | | | | | |
| Peristaltic pH pump flow | 1,5 | | | | | | | | | | | | | |
| Length of the cell cable | 1,5 m | | | | | | | | | | | | | |
| Minimum water temperature | 5°C | | | | | | | | | | | | | |
| Maximum water temperature | 40°C | | | | | | | | | | | | | |
| Safety | "Flow" indicator light: lack of flow, production is interrupted as long as conditions are not ideal ; "g/L": Salt level too high or too low; "High" & "Low" indicators for pH & ORP values | | | | | | | | | | | | | |
| Cell Size | 33 x 16 x 17cm | | | | | | | | | | | | | |
| Control Box Size | 23 x 34 x 12cm | | | | | | | | | | | | | |

# eXO® iQ & eXO® iQ LS

## WATER CONTROL WITH A DOSE OF SERENITY

The eXO® salt water chlorinator solutions

The eXO® platform is an efficient and automatic disinfection solution. Easy to use, it offers complete water treatment, controlling the pool's equipment for optimal water quality.

eXO® iQ

eXO® iQ LS

**All-in-one control**

All pool water quality management functions are centralised in a single interface:

- automatic pH and chlorination regulation (Redox method) with the complementary pH Link & Dual Link modules
- pool device control: filter pump, heater, lighting, etc.

### Peace of mind

With its long-lasting electrode and high-quality sensors, the eXO® solution offers optimal water quality all the time. As proof of reliability, the chlorinator comes with a 3-year unconditional warranty[1].

### Built-in Wi-Fi

The iAquaLink® app allows you to have remotely and real-time control of your water quality and your pool's equipment[2] from you smartphone or tablet.

[1] 3 years unconditional (device), 2 years (pH sensor), 1 year (ORP sensor)
[2] Connected to the eXO® solution.

# Hydroxinator® iQ

## INCOMPARABLY GENTLE, PURE AND CRYSTAL CLEAR WATER

Exclusive magnesium-based chlorinator solution

This solution combines the properties of MagnaPool® magnesium-based minerals with an exceptionally fine filtration system for a natural and incomparably crystal clear water.

Hydroxinator® iQ

### Gentle water for skin and eyes

MagnaPool® naturally slows the development of chloramines, so you can enjoy gentle water without unpleasant smells or skin and eyes irritation.

### A pure crystal clear swimming pool

MagnaPool® provides exceptionally clear water without adding any sanitizing chemicals.

### Environmentally- friendly water treatment

Crystal Clear filter media for MagnaPool® swimming pools consists of thousands of pure glass crystals. It is not receptive to bacteria and only requires a short filter backwash.

# > A UNIQUE INTERFACE FOR PERFECT CONTROL

# > TECHNICAL CARACTERISTICS

| | eXO® iQ | eXO® iQ LS | Hydroxinator® iQ |
|---|---|---|---|
| Maximum volume treated (temperate climate with water up to 28°C, disinfection capacity linked to the daily filtration time, here for 8hrs/day) | 150 m³ | 70 m³ | 150 m³ |
| Treatment type | Salt water chlorination | Salt water chlorination Low Salinity | MagnaPool® Magnesium mineral chlorination |
| Recommended concentration (measured in the water) | 4 g/L | 2 g/L | 4 g/L |

| | |
|---|---|
| Optional pH regulation | pH Link "Plug & Play" module |
| Optional pH and ORP regulation | Dual Link "Plug & Play" module |

| | |
|---|---|
| Connectivity / App control | iAquaLink<br>Embedded WiFi |
| Boost mode | 24h shock chlorination |
| Cover mode | Reduced chlorination when the electric cover is closed<br>Automatic or manual activation (0 to 30% adjustable chlorination output) |
| Water temperature indicator | Yes, with cell protection function |
| Equipment control | Up to 3 programmable equipment :<br>• Filter pump: single or variable speed (Zodiac®) • Lighting: White or color (Zodiac®)<br>• Heater: Heat pump, heater... • Any other device |
| Security – Low water flow sensor | Mechanical flow switch |
| Self-cleaning cell (polarity reversal) | Adjustable every 2 to 8 hours (allows to adpat the cell revesal to water hardness) |
| Warranty – Device | 3 years, unconditional |
| Warranty – Sensors | 2 years (pH sensor) / 1 year (ORP sensor) |

SALT WATER CHLORINATORS

# eXO® iQ

**+ All-in-one control: all water quality control is centralised in a single interface (pH, chlorination, filter pump, heater & light control)**
**+ Peace of mind: long lasting electrodes, high-end sensors**
**+ Built-in Wi-Fi: remote control with the iAquaLink app**

PROFESSIONAL ADVICE RECOMMENDED

3 YEAR WARRANTY · ALL TYPES OF POOLS · UNCONDITIONAL WARRANTY · TITANE INSIDE · UPGRADABLE SYSTEM · CHEMICAL REDUCTION · iAquaLink CONTROL

## DESCRIPTION

- Normal, Boost (100 %); Low (Adjustable cover mode from 0 to 30 %)
- Equipment control : Filter pump (single or Zodiac® variable speed) + 2 auxiliaries outputs for: heater control (temp setpoint and heating priority), light control (with dedicated Zodiac® NL LED color selection) any other device
- 24 h clock / 2 chlorination timers + 2 single speed or 4 Zodiac variable speed filter pump timers + 1 timer per additional equipment
- Plumbing compatibility : DN50 mm, DN63 mm, 1 ½'' (48 mm)

- App Control:Yes
- App Control Type:iAquaLink
- User Interface:LCD Display

## ACCESSORIES INCLUDED

- Wall mounting kit
- Flow switch kit
- Temperature sensor kit
- Reducing bushes kit
- Free app control

## OPTIONAL ACCESSORIES

- pH Link-WW000176
- Dual Link-WW000177

## DESCRIPTION

| Name | Recommended Pool Volume | Nominal Chlorine Production | Sku Reference |
|---|---|---|---|
| eXO® iQ 10 | 40m³ | 10g/h | WW000162 |
| eXO® iQ 18 | 70m³ | 18g/h | WW000163 |
| eXO® iQ 22 | 100m³ | 22g/h | WW000164 |
| eXO® iQ 35 | 160m³ | 35g/h | WW000165 |

## TECHNICAL FEATURES

| Name | eXO® iQ 10 | eXO® iQ 18 | eXO® iQ 22 | eXO® iQ 35 |
|---|---|---|---|---|
| Sku Reference | WW000162 | WW000163 | WW000164 | WW000165 |
| Interface languages | 11 (FR-EN-DE-ES-IT-NL-PT-CZ-SL-HU-SW) | | | |
| Cell Position | Horizontal | | | |
| Polarity reversal | Yes: adjustable from 2 to 8h (Factory setting= 5h) | | | |
| Required Salt level Minimum | 4 - 3,3g/L | | | |
| Electric Power Supply | 220-240 V / 50-60 Hz | | | |
| Power consumption (W) | Max 200 | | | |
| Working life of cells | 10.000 h (titanium plates, SC6 ruthenium coating) | | | |
| Length of the cell cable | 1,8 | | | |
| Minimum water temperature | 5°C | | | |
| Maximum water temperature | 40°C | | | |
| Safety | Temperature sensor: Chlorine production lowered in case of cold water to protect the electrode<br>'Low salt' indicator light: Reduced production to protect the electrode<br>'No flow' message: Production is interrupted as long as conditions are not ideal<br>Mechanical flow switch" | | | |
| Cell Size | 32,0 x 13,5 x 11,0cm | | | |
| Control Box Size | 32,0 x 37,0 x 12cm | | | |

SALT WATER CHLORINATORS

# eXO® iQ LS

**+ Low salinity chlorinator**
**+ All-in-one control: all water quality control is centralised in a single interface (pH, chlorination, filter pump, heater & light control)**
**+ Built-in Wi-Fi: remote control with the iAquaLink app**

PROFESSIONAL ADVICE RECOMMENDED

3 YEAR WARRANTY · LOW SALT VERSION · UNCONDITIONAL WARRANTY · TITANE INSIDE · UPGRADABLE SYSTEM · CHEMICAL REDUCTION · iAquaLink CONTROL

## DESCRIPTION

- Normal, Boost (100 %); Low (Adjustable cover mode from 0 to 30 %)
- Equipment control : Filter pump (single or Zodiac® variable speed) + 2 auxiliaries outputs for: heater control (temp setpoint and heating priority), light control (with dedicated Zodiac® NL LED color selection) any other device
- 24 h clock / 2 chlorination timers + 2 single speed or 4 Zodiac variable speed filter pump timers + 1 timer per additional equipment
- Plumbing compatibility : DN50 mm, DN63 mm, 1 ½" (48 mm)

- App Control:Yes
- App Control Type:iAquaLink
- User Interface:LCD Display

## ACCESSORIES INCLUDED

- Wall mounting kit
- Flow switch kit
- Temperature sensor kit
- Reducing bushes kit
- Free app control

## DESCRIPTION

| Name | Recommended Pool Volume | Nominal Chlorine Production | Sku Reference |
|---|---|---|---|
| eXO® iQ LS 10 | 40m³ | 10g/h | WW000170 |
| eXO® iQ LS 18 | 70m³ | 18g/h | WW000171 |

## TECHNICAL FEATURES

| Name | eXO® iQ LS 10 | eXO® iQ LS 18 |
|---|---|---|
| Sku Reference | WW000170 | WW000171 |
| Interface languages | 11 (FR-EN-DE-ES-IT-NL-PT-CZ-SL-HU-SW) | |
| Cell Position | Horizontal | |
| Polarity reversal | Yes: adjustable from 2 to 8h (Factory setting= 5h) | |
| Required Salt level Minimum | 2 - 1,6g/L | |
| Electric Power Supply | 220-240 V / 50-60 Hz | |
| Power consumption (W) | Max 200 | |
| Working life of cells | 10.000 h (titanium plates, SC6 ruthenium coating) | |
| Length of the cell cable | 1,8 | |
| Minimum water temperature | 5°C | |
| Maximum water temperature | 40°C | |
| Safety | Temperature sensor: Chlorine production lowered in case of cold water to protect the electrode<br>'Low salt' indicator light: Reduced production to protect the electrode<br>'No flow' message: Production is interrupted as long as conditions are not ideal<br>Mechanical flow switch" | |
| Cell Size | 32,0 x 13,5 x 11,0cm | |
| Control Box Size | 32,0 x 37,0 x 12cm | |

SALT WATER CHLORINATORS

# pH Link

**+ Fully integrated disinfection and dosing system**
**+ Automatic regulation**
**+ Accurate & easy reading: high quality glass sensor in a POD**

## DESCRIPTION

- Calibration : Semi-automatic at 2 points pH 4 and pH 7 & ORP 470 mV (buffer solutions included)
- Factory setting: pH = 7,2 / ORP = 700 mV
- Combined sensor, simple-junction and simple-porous, Ø12 mm glass body

2 YEAR WARRANTY

ALL TYPES OF POOLS

EASY INTALLATION

## ACCESSORIES INCLUDED

- pH Sensor
- ORP sensor
- pH 4 and pH 7 buffer solutions x3
- 470 mV ORP buffer solutions x3
- 22 mm hole saw
- POD Kit

## OPTIONAL ACCESSORIES

- Intake pipe-R0808000
- pH 4 and pH 7 buffer solutions (x6 + x6)-R0824400
- ORP standard solutions (RedOx potential) 470 mV (6un.)-R0824500
- WINTERIZING CAP FOR CELL-R0770100
- 3m BNC cable extension-R0635800

## DESCRIPTION

| Name | Sku Reference |
|---|---|
| pH Link | WW000176 |

## TECHNICAL FEATURES

| Name | pH Link |
|---|---|
| Sku Reference | WW000176 |
| Dosage | Acid |
| Cell Position | Vertical, on the POD (provided) |
| Reading scale | 0,0 -12,0 pH |
| Reading accuracy | 0,1 pH |
| Sensor tolerance temperature | 0-60 °C, water speed ≤ 2 m/s |
| Peristaltic pH pump flow | 1,7 |
| Safety | Overdosing safety, low measures, unplugged sensor, broken sensor (pH Link) |
| Cell Size | 30.5 x 18.1 x 11.5cm |

SALT WATER CHLORINATORS

# Dual Link

**+ Fully integrated disinfection and dosing system**
**+ Automatic regulation**
**+ Accurate & easy reading: high quality glass sensor in a POD**

## DESCRIPTION

- Calibration : Semi-automatic at 2 points pH 4 and pH 7 & ORP 470 mV (buffer solutions included)
- Factory setting: pH = 7,2 / ORP = 700 mV
- Combined sensor, simple-junction and simple-porous, Ø12 mm glass body

2 YEAR WARRANTY

ALL TYPES OF POOLS

EASY INTALLATION

## ACCESSORIES INCLUDED

- pH Sensor
- ORP sensor
- pH 4 and pH 7 buffer solutions x3
- 470 mV ORP buffer solutions x3
- 22 mm hole saw
- POD Kit

## OPTIONAL ACCESSORIES

- Intake pipe-R0808000
- pH 4 and pH 7 buffer solutions (x6 + x6)-R0824400
- ORP standard solutions (RedOx potential) 470 mV (6un.)-R0824500
- WINTERIZING CAP FOR CELL-R0770100
- 3m BNC cable extension-R0635800

## DESCRIPTION

| Name | Sku Reference |
|---|---|
| Dual Link | WW000177 |

## TECHNICAL FEATURES

| Name | Dual Link |
|---|---|
| Sku Reference | WW000177 |
| Dosage | Acid |
| Cell Position | Vertical, on the POD (provided) |
| Reading scale | 100 - 1000 mV |
| Reading accuracy | 10 mV |
| Sensor tolerance temperature | 0-60 °C, water speed ≤ 2 m/s |
| Peristaltic pH pump flow | 1,7 |
| Safety | Overdosing safety, low measures, unplugged sensor, broken sensor (pH Link) |
| Cell Size | 30,5 x 18,1 x 11,5cm |

# PATENTED MAGNESIUM WATER TREATMENT

## For incomparably gentle, crystal clear water

The patented MagnaPool® solution combines the clarifying properties of magnesium with a filtration system of exceptional quality, for a perfectly healthy and balanced, mineral-enriched swimming pool.

## > HOW DOES IT WORK?

**The MagnaPool® solution combines natural minerals, magnesium and potassium (diluted in the pool), to purify the water while providing an incomparable bathing exerience.**
This water treatment solution naturally converts magnesium minerals to magnesium hydroxide, a gentle and silky substance that acts as a clarifier in order to retain all the impurities, even the finest, in the water. Without impurities, bacteria no longer grow and are removed from the pool.

The MagnaPool® Hydroxinator® iQ then generates non-synthetic (or inorganic) chlorine: **this phenomenon is hydroxination.** The resulting chlorine, without addition of chemical products, protects the integrity and quality of the water, without harming the environment in which it is used.

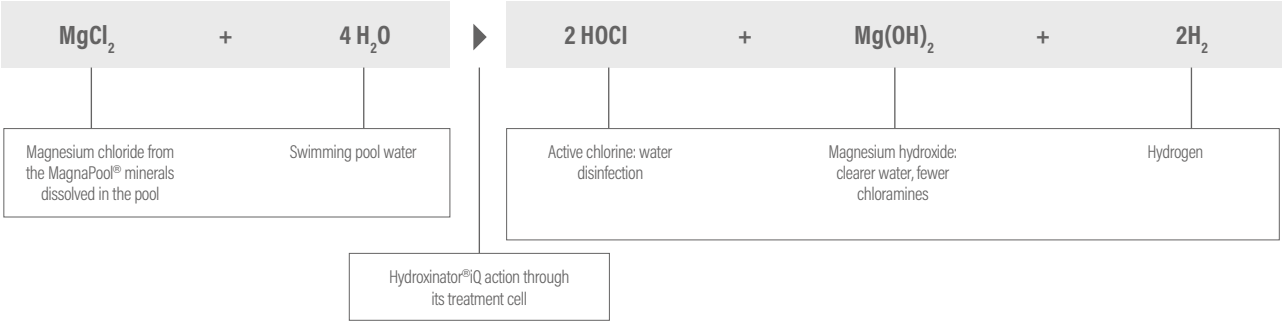


**DID YOU KNOW?**
MagnaPool® minerals do not contain any sodium chloride («salt» or NaCl). The MagnaPool® minerals do not produce soda, a very basic element that affects negatively the water balance.

### STANDARD INSTALLATION

The patented MagnaPool® solution comprises a Hydroxinator® iQ with its treatment cell, Crystal Clear glass filter medium and MagnaPool® minerals. Each of these elements is needed for the MagnaPool® solution to function; they cannot be sold separately.

To obtain a complete MagnaPool® eco-system, the assembly can be combined with Zodiac MS filter and variable speed pump.

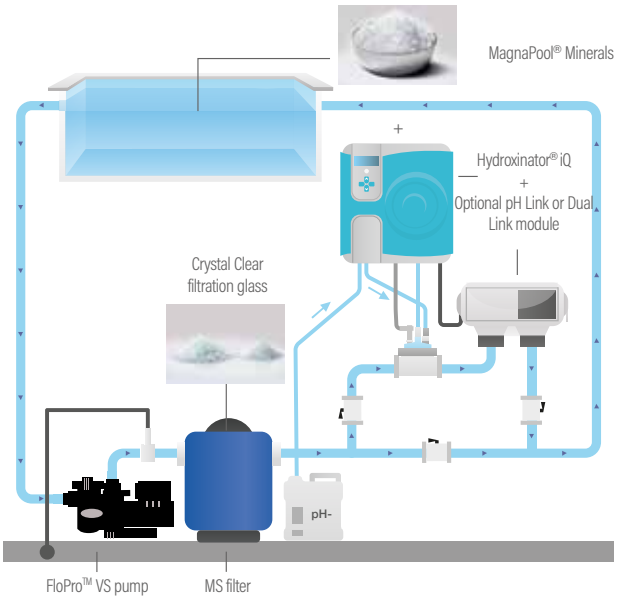


MagnaPool ECOSYSTEM

**REFERENCE POINT**
The MagnaPool® solution comprises the Hydroxinator® iQ, MagnaPool® minerals and the Crystal Clear filtration crystals.
Zodiac® equipment is compatible with and/or additional to the MagnaPool® system.
Identify all the products in the MagnaPool® ecosystem using this pictogram.

MagnaPool™ Mineral Pool Science

## > THE BENEFITS OF THE MAGNAPOOL® SOLUTION

### A PURE, CRYSTAL CLEAR SWIMMING POOL

MagnaPool® provides exceptionally clear water without adding chemical disinfection products.
This intense clarity is made possible by combining two innovative factors. Firstly, the powerful natural clarifying properties of magnesium in MagnaPool® minerals.
And secondly, exceptionally fine filtration using Crystal Clear filtration media.

Mg 12 24 Mineral Pool Science

### GENTLE WATER FOR SKIN AND EYES

Compared with conventional water treatment systems (manual chlorine addition or salt electrolysis + sand filter), MagnaPool® naturally slows the development of chloramines, molecules that can cause an unpleasant chlorine smell and eye or skin irritation.

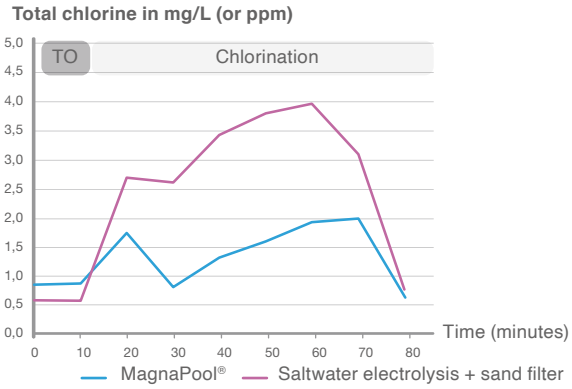


Zodiac laboratory measurement of chloramines (or combined chlorine) after adding organic matter to two pools at the same time, one treated with salt electrolysis + sand filter and the other with MagnaPool®.

ECO FRIENDLY

### ENVIRONMENTALLY-FRIENDLY WATER TREATMENT

Crystal Clear filter media for MagnaPool® swimming pools consist of thousands of pure glass crystals. Unlike sand, it is not receptive to bacteria and only requires a short filter backwash.
Thus, water consumption is reduced by up to 75%.

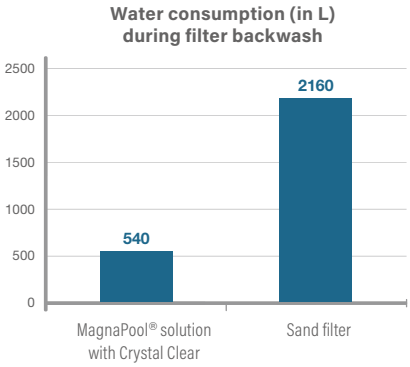


Value for a pool equipped with a 640 mm filter and a 1.0 HP (or 0.75 kW) pump.

**DID YOU KNOW?**
Magnesium takes part in more than 300 enzymatic reactions and cell growth in the human body, such as nerve transmission, skin renewal and cell relaxation.
The chlorophyll molecule, basic plant component, is formed around a magnesium atom.

SALT WATER CHLORINATORS

# Hydroxinator® iQ

+ Gentle water for skin and eyes
+ A pure, crystal clear swimming pool
+ Environmentally friendly water treatment
+ Built-in Wi-Fi: remote control with the iAquaLink™ app

2 YEAR WARRANTY · UNCONDITIONAL WARRANTY · Ti22 TITANE INSIDE · CHEMICAL REDUCTION · iAquaLink CONTROL

## DESCRIPTION

- Normal, Boost (100%), Low (shutter mode adjustable from 0 to 30%)
- Filtration pump (Zodiac single or variable speed) + 2 auxiliary outputs for: heating control (°C setpoint, heating priority), lighting control (colour selection for Zodiac NL LEDs) + any other equipment
- 24-hour clock / 2 chlorination timers + 2 single-speed filtration pump timers or 4 Zodiac FloPro VS filtration pump timers + 1 timer per piece of equipment
- Compatible pipework: DN50 mm, DN63 mm, 1 ½'' (48 mm)

- App Control:Yes
- App Control Type:iAquaLink
- User Interface:LCD Display

## ACCESSORIES INCLUDED

- Wall mounting kit
- Flow sensor kit
- Temperature sensor kit
- Adhesive reducer kit
- Mobile application (free to download)

## OPTIONAL ACCESSORIES

- pH Link-WW000176
- Dual Link-WW000177
- MagnaPool Minerals-WC000163
- Crystal Clear 0,7/1,3 mm - Glass media-WF000063
- Crystal Clear 1,0/3,0 mm - Glass media-WF000064

## DESCRIPTION

| Name | Recommended Pool Volume | Nominal Chlorine Production | Sku Reference |
|---|---|---|---|
| Hydroxinator® iQ 10 | 40m³ | 10g/h | WW000172 |
| Hydroxinator® iQ 18 | 70m³ | 18g/h | WW000173 |
| Hydroxinator® iQ 22 | 100m³ | 22g/h | WW000174 |
| Hydroxinator® iQ 35 | 160m³ | 35g/h | WW000175 |

## TECHNICAL FEATURES

| Name | Hydroxinator® iQ 10 | Hydroxinator® iQ 18 | Hydroxinator® iQ 22 | Hydroxinator® iQ 35 |
|---|---|---|---|---|
| Sku Reference | WW000172 | WW000173 | WW000174 | WW000175 |
| Interface languages | 12 (FR-EN-DE-ES-IT-NL-PT-CZ-SL-HU-SW) | | | |
| Cell Position | Horizontal | | | |
| Polarity reversal | Yes: adjustable from 2 to 8h (Factory setting= 5h) | | | |
| Required Salt level Minimum | 4 - 3,3g/L | | | |
| Electric Power Supply | 220-240 V / 50-60 Hz | | | |
| Power consumption (W) | Max 200 | | | |
| Working life of cells | 10.000 h (titanium plates, SC6 ruthenium coating) | | | |
| Length of the cell cable | 1,8 | | | |
| Minimum water temperature | 5°C | | | |
| Maximum water temperature | 40°C | | | |
| Safety | Temperature sensor: Chlorine production lowered in case of cold water to protect the electrode<br>'Low salt' indicator light: Reduced production to protect the electrode<br>'No flow' message: Production is interrupted as long as conditions are not ideal<br>Mechanical flow switch" | | | |
| Cell Size | 32,0 x 13,5 x 11,0 cm | | | |
| Control Box Size | 32,0 x 37,0 x 12cm | | | |

MAGNAPOOL®

# MagnaPool® Minerals

+ Exclusive: patented MagnaPool® minerals specifically for MagnaPool® pools
+ Crystal-clear water, less chloramines
+ Eco-friendly: salt-free formulation (no sodium chloride)
+ Easy: easy handling with 10 kg packaging

ALL TYPES OF POOLS

MagnaPool ECOSYSTEM

WATER CONSERVATION

## DESCRIPTION

| Name | Sku Reference |
|---|---|
| MagnaPool® Minerals | WC000163 |

## TECHNICAL FEATURES

| | |
|---|---|
| Contents | Patented MagnaPool® minerals |
| Formulation | Magnesium chloride and potassium chloride |
| Form | Tablet/powder mixture |
| Dosage* | 5 kg/m$^3$ |
| Bag dimensions (l x h) | 40 x 50 cm |
| Bag net weight | 10 kg |
| Palletization | 72 bags per pallet (minimum order quantity = 10 bags) |
| Pallet net weight* | 720 kg |
| Usage indication | 1 x 720 kg pallet is enough to start up 1 or 2 MagnaPool® swimming pools (depending on volume) |

| ASSOCIATED PRODUCTS | | ASSOCIATED GLASS MEDIA | |
|---|---|---|---|
| Hydroxinator® iQ | Hydroxinator® | Crystal Clear 0,7/1,3 mm | Crystal Clear 1,0/3,0 mm |
| WW000172/173/174/175 | (old model) | WF000063 | WF000064 |

* Mineral levels are measured using the usual salinity testers. Add 5 x 10kg bags per 10 m$^3$ to measure a concentration of 4 g/L (4000 ppm).

FILTERING MEDIA

# Crystal Clear

PROFESSIONAL ADVICE RECOMMENDED

+ Optimum filtration efficiency
+ Long lasting : lasts 3 times longer than sand
+ Eco-friendly : up to 75% water savings

ALL TYPES OF POOLS

MagnaPool ECOSYSTEM

WATER CONSERVATION

## DESCRIPTION

| Name | Sku Reference |
|---|---|
| Crystal Clear 0,7/1,3 mm | WF000063 |
| Crystal Clear 1,0/3,0 mm | WF000064 |

## TECHNICAL FEATURES

| | |
|---|---|
| Contents | Filtering medium made of 100% pure glass crystals |
| Form | Translucent |
| Dosage | Total weight in the filter : 10% less than the equivalent in sand<br>1,0/3,0mm : sufficient to cover the filter laterals<br>0,7/1,3 mm : in addtion, to make up the total weight |
| Filtration efficiency | 77,9% turbidity reduction* |
| Bag dimensions (l x h) | 45 x 65 cm |
| Bag net weight | 15 kg (= shipping unit, skus can be mixed on a pallet) |

## ASSOCIATED PRODUCTS

| MS filter | Hydroxinator® iQ | Hydroxinator® |
|---|---|---|
| WF000094/95/96/97/98 | WW000172/173/174/175 | (old model) |

* Turbidity reduction test carried in a lab with Crystal Clear fine, under EN 16713-1 standard ( test #7.2.4). Regulatory requirement is 50% min.

MINERAL PURIFERS

# Nature² Spa

+ Ready to use
+ Autonomous
+ Enhanced bathing experience

EASY INTALLATION

ALL TYPES OF SPAS

## DESCRIPTION

- Stabilised organic chlorine, "dichlor" or "trichlor" type (tablets or granules), calcium hypochlorite inroganic chlorine, liquid chlorine, active oxygen (liquid or powder) or UV treatment may be used, Compatible with salt water chlorination,
  - 6 months from the time the cartridge is placed in the purifier
  - Nature² Spa is not compatible with bromide and its derivatives, chlorine free disinfectants
  - Adapted to all spa flow rates

## ACCESSORIES INCLUDED

- Positioning pins

## DESCRIPTION

| Name | Recommended Pool Volume | Sku Reference | Packaged Product Weight |
|---|---|---|---|
| Nature² Spa Cartridge - 6-packs display | 0 - 4m³ | WN000001 | 0,1kg |

## TECHNICAL FEATURES

| Name | Nature² Spa Cartridge - 6-packs display |
|---|---|
| Sku Reference | WN000001 |
| Maximum water temperature | 35°C |

## > HOW DOES IT WORK?

Nature² technology combines **recognized disinfection and purification efficiency of certain mineral components** and the unique properties of a material used in high-tech industries: ceramic (micro-porous material).

**The ceramic beads** retain micro-particles (colloidal matter) not stopped by the filter, to clarify the swimming pool water.

**Zinc particles,** coated on some ceramic beads, give Nature² cartridges algicidal properties.

**Silver particles,** coated on other ceramic beads, offer bactericidal and fungicidal (disinfection) properties.

The combined action of these 3 properties enables Nature² systems to use **up to 4 times less chlorine** compared to conventional manual treatment: 0.5 ppm free chlorine is enough (depending on conditions of use).

### OPERATION OF THE NATURE² SPA CARTRIDGE

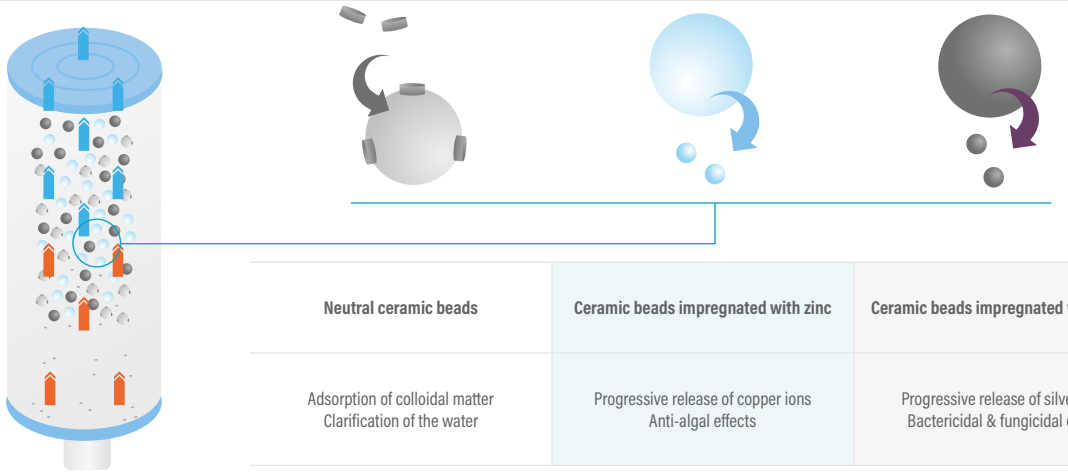

| Neutral ceramic beads | Ceramic beads impregnated with zinc | Ceramic beads impregnated with silver |
|---|---|---|
| Adsorption of colloidal matter<br>Clarification of the water | Progressive release of copper ions<br>Anti-algal effects | Progressive release of silver ions<br>Bactericidal & fungicidal effect |

## > AN ENHANCED BATHING EXPERIENCE

- Requiring up to 4 times less disinfectant, Nature² systems clearly enhance bathing (less odour, no more unpleasant sensations on the skin, etc.).
- By using fewer chemical products, pH is potentially less disturbed. The water balance, a measure of efficient disinfection treatment, is consequently more stable.
- Depending on models and needs, Nature² can also be used with chlorine, active oxygen, a UV system or ozonator.

# CLEANING

## ASTRALPOOL


400 Pool cleaner accessories
400 Suction automatic pool cleaners
401 Manual pool cleaners - Blue Line Range
403 Manual pool cleaners - Shark Range
404 Manual pool cleaners - Classic Range
408 Net'n'Clean Integrated Cleaning System
411 Hoses


## ZODIAC®


**412 ROBOTIC POOL CLEANERS**
418 Tornax
421 Sweepy®
423 Voyager™
430 Alpha iQ™

**440 CORDLESS POOL CLEANERS**
440 Pixel™
442 Freerider™

**446 HYDRAULIC CLEANERS**
447 Discs
451 Spa Wand

**452 AUTOMATIC CLEANER ACCESSORIES**
452 Diagnostic tools
453 Cyclonic™ Leaf Catcher


## Polaris®


**454 PRESSURE POOL CLEANERS**
455 280&380 platforms
457 3900 platform
458 Quattro platform

**459 PRESSURE POOL CLEANERS ACCESSORIES**
459 Booster pumps
459 Control box
460 TailSweep Pro

POOL CLEANER ACCESSORIES

# Pump caddy - for stand-alone pool cleaners

## DESCRIPTION

Made of anodized aluminium tube and a 460 mm x 370 mm plastic platform. Face plate in AISI-304 stainless steel.

| | Code | Standard Pack | Standard weight in kg |
|---|---|---|---|
| | 04648 | 1 | 8.06 |

SUCTION AUTOMATIC POOL CLEANERS

# Splasher

## DESCRIPTION

Splasher is an hydraulic suction cleaner. It's using the pool filtration system to work and collect the debris in the pump pre-filter.
It is simply connected to the skimmer vacuum plate and works at the same time than the pool filtration.

Its membrane system ensures an optimum and quieter performance.

- Cleaning areas: floor and walls.
- Pool floors types: flat or gentle slopes.
- Pool size: up to 9m length.
- Filter pump minimum required pressure: ½ HP.
- Included in pack : 9,6m hose.

| | Code | Standard Pack | Standard weight in kg |
|---|---|---|---|
| **Splasher suction cleaner** | 6628 | 1 | 5.6 |

# Mamba

## DESCRIPTION

Splasher is an hydraulic suction cleaner. It's using the pool filtration system to work and collect
Mamba is an hydraulic suction cleaner. It's using the pool filtration system to work and collect the debris in the pump pre-filter.
It is simply connected to the skimmer vacuum plate and works at the same time than the pool filtration.

The Mamba's dual suction design ensures the pump and filter are never starved of water. The adjustable bypass valve allows for operation from small to large capacity filtration pumps.

- Cleaning areas: floor and walls.
- Pool floors types: flat or gentle slopes.
- Pool size: up to 9m length.
- Filter pump minimum required pressure: ½ HP.
- Included in pack : 12 x 80 cm hose sections, flow regulator, universal adapter.

| | Code | Standard Pack | Standard weight in kg |
|---|---|---|---|
| **Mamba suction cleaner** | 60092 | 1 | 7 |

MANUAL POOL CLEANERS - BLUE LINE RANGE

# Blue Line - manual suction cleaner - wing-nut fastening

69661

69673

| | Code | Standard Pack | Standard weight in kg |
|---|---|---|---|
| 1 ½" 350 flexible pool cleaner | 69661 | 6 | 6.6 |
| 1 ½" 350 aluminium pool cleaner | 69673 | 6 | - |
| Triangular pool cleaner | 69663 | 6 | - |
| Oval pool cleaner | 69664 | 6 | - |

69663

69664

69656

# Blue Line - wall brush - wing-nut fastening

69658

| | Code | Standard Pack | Standard weight in kg |
|---|---|---|---|
| Adjustable handle wall brush (48 cm) | 69656 | 12 | 2.5 |
| Fixed handle wall brush (50 cm) | 69658 | 12 | 3.9 |
| Multifunction manual brush | 69669 | 12 | - |

69669

# Blue Line - leaf skimmer - wing-nut fastening

69665

| | Code | Standard Pack | Standard weight in kg |
|---|---|---|---|
| Plastic flat leaf skimmer | 69665 | 12 | - |
| Plastic net leaf skimmer fixed handle | 69666 | 12 | - |
| Aluminium net leaf skimmer | 69667 | 12 | - |

69666

69667

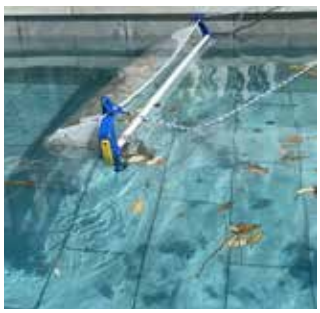

# Leaf Skimmer XL

| | Code | Standard Pack | Standard weight in kg |
|---|---|---|---|
| | 76556 | - | - |

# Complete kit - for the pool maintenance

| | Code | Standard Pack | Standard weight in kg |
|---|---|---|---|
| | 73122 | - | - |

69659 - 69660

# Blue Line - handles - wing-nut fastening

| | Code | Standard Pack | Standard weight in kg |
|---|---|---|---|
| 1.8-3.6 m easy regulation aluminium handle | 69659 | 12 | - |
| 2.4-4.8 m easy regulation aluminium handle | 69660 | 12 | - |

# Blue Line - cleaning material wall bracket

| | Code | Standard Pack | Standard weight in kg |
|---|---|---|---|
| Cleaning material wall bracket | 69662 | 6 | - |

# Blue Line - floating dispenser

| | Code | Standard Pack | Standard weight in kg |
|---|---|---|---|
| Floating dispenser for 200g tablets | 69668 | 12 | - |

36618

40997

41625

36619

MANUAL POOL CLEANERS - SHARK RANGE

## Shark - pool cleaner - wing-nut or wishbone fixing

| | Code | Standard Pack | Standard weight in kg |
|---|---|---|---|
| Shark Flexo pool cleaner | 36618 | 6 | - |
| Shark Oval pool cleaner | 40997 | 5 | |
| Shark Injected Aluminium pool cleaner | 41625 | 4 | |
| Shark Triangular pool cleaner | 36619 | 4 | |

36615

36616

MANUAL POOL CLEANERS

## Shark - brushes - wing-nut or wishbone fixing

| | Code | Standard Pack | Standard weight in kg |
|---|---|---|---|
| Shark special bottom curved brush | 36615 | 10 | 3.7 |
| Shark bottom/walls curved brush | 36616 | 15 | 4.2 |
| Shark corner suction brush | 36617 | 12 | 2.4 |

## Shark - leaf skimmers - wing-nut or wishbone fixing

| | Code | Standard Pack | Standard weight in kg |
|---|---|---|---|
| Shark water surface leaf skimmer | 36613 | 15 | 6.2 |
| Shark deep water leaf skimmer | 36614 | 15 | 6.5 |

36613

36614

## Shark - telescopic pole - wing-nut or wishbone fixing

| | Code | Standard Pack | Standard weight in kg |
|---|---|---|---|
| Shark 1.8 - 3.6 m telescopic pole | 38422 | 10 | 11.7 |
| Shark 2.4 - 4.8 m telescopic pole | 38423 | 10 | 14.4 |

38422 - 38423

## Shark - floating dispenser for 5 tablets

| | Code | Standard Pack | Standard weight in kg |
|---|---|---|---|
| Floating dispenser for 5 tablets 200 g Shark | 36620 | 12 | 6.6 |

## Shark - submergible analogue thermometer

| | Code | Standard Pack | Standard weight in kg |
|---|---|---|---|
| Shark submergible analogue thermometer | 36622 | 10 | 2.8 |

MANUAL POOL CLEANERS - CLASSIC RANGE

01355 - 01356

## Classic - pool cleaner - wing-nut fastening

| | Code | Standard Pack | Standard weight in kg |
|---|---|---|---|
| Classic extruded aluminium pool cleaner 1 ½" connection 350 mm | 01355 | 4 | 10.2 |
| Classic extruded aluminium pool cleaner 2" connection 450 mm | 01356 | 4 | 12.2 |

## Classic - Flexo pool cleaner

| | Code | Standard Pack | Standard weight in kg |
|---|---|---|---|
| Wishbone fixing | 01351 | 4 | 7.2 |
| Wing-nut fixing | 01352 | 4 | 7.2 |

01405

01407

09456

## Classic - brushes - wing-nut fastening

| Straight brush | Code | Standard Pack | Standard weight in kg |
|---|---|---|---|
| Classic PP bristle 330 mm | 01405 | 20 | 2.8 |
| Classic S.S. bristle 165 mm | 01407 | 20 | 9.0 |
| Classic PP bristle 180 mm | 09456 | 14 | 6.1 |

## Classic - brush holder - wing-nut fastening

| Classic water surface leaf skimmer | Code | Standard Pack | Standard weight in kg |
|---|---|---|---|
| with handle incorporated | 01400 | 12 | 5 |

## Classic - brush holder - wing-nut fastening

| Classic water surface leaf skimmer | Code | Standard Pack | Standard weight in kg |
|---|---|---|---|
| with handle incorporated | 01400 | 12 | 5 |

# Classic - pool cleaner - wishbone fixing

01353-01354-08661

| Extruded aluminium pool cleaner | Code | Standard Pack | Standard weight in kg |
|---|---|---|---|
| 1 ½" connection 350 mm | 01353 | 4 | 11.8 |
| 2" connection 450 mm | 01354 | 4 | 15.5 |
| 1 ½" connection 450 mm | 08661 | 4 | 15.5 |

16601

01357

01358

# Classic

## public pool aluminium pool cleaner - wishbone fixing

| Length: 800 mm | Code | Standard Pack | Standard weight in kg |
|---|---|---|---|
| Drag with cable (00210 not included) | 01357 | 1 | 13.0 |
| **Length: 450 mm** | | | |
| With nozzle 1 ½" - 2" connection | 01358 | 4 | 13.6 |

01406

01404

# Classic - brushes - wishbone fixing

| | Code | Standard Pack | Standard weight in kg |
|---|---|---|---|
| PP bristle 330mm straight brush | 01406 | 20 | 2.8 |
| Bottom/walls curved brush | 01404 | 20 | 4 |
| Floating line brush | 11789 | 20 | 3.8 |

01398

01396

# Classic - leaf skimmers

| Wishbone fixing | Code | Standard Pack | Standard weight in kg |
|---|---|---|---|
| Water surface leaf skimmer | 01398 | 20 | 4.2 |
| Deep water leaf skimmer | 01398 | 20 | 4.3 |
| **Wing-nut fixing** | | | |
| Water surface leaf skimmer | 01399 | 20 | 4.3 |
| Deep water leaf skimmer | 01397 | 20 | 4.4 |

## Classic - fixed handle - wishbone fixing

| | Code | Standard Pack | Standard weight in kg |
|---|---|---|---|
| Fixed handle 2.5 m | 01364 | 20 | 11.4 |

## Classic - telescopic pole - wing-nut or wishbone fixing

| | Code | Standard Pack | Standard weight in kg |
|---|---|---|---|
| Classic 1.8 - 3.6 m telescopic pole | 01359 | 12 | 13.4 |
| Classic 2.4 - 4.8 m telescopic pole | 01360 | 12 | 16.2 |

## Classic - reinforced telescopic pole - Public pools

### DESCRIPTION

Reinforced telescopic pole, aluminium

| | Code | Standard Pack | Standard weight in kg |
|---|---|---|---|
| 2.5 - 5 m | 01361 | 5 | 16.0 |
| 3.75 - 7.5 m | 15838 | 1 | 6.0 |
| 5 - 10 m | 01362 | 1 | 6.5 |
| 6.5 - 13 m | 01363 | 1 | 8.4 |

## Hose adapter

### DESCRIPTION

For connecting wing nut assembly to clip hose or clip assembly to wing nut hose.

| | Code | Standard Pack | Standard weight in kg |
|---|---|---|---|
| Adapts the wishbone handle connection to wing-nut connection | 08465 | 35 | 2.55 |
| Adapts the reinforced pole connection to wing-nut connection | 17937 | 38 | 2.66 |

## Hose adapter

### DESCRIPTION

For connecting wing nut assembly to clip hose or clip assembly to wing nut hose.

| | Code | Standard Pack | Standard weight in kg |
|---|---|---|---|
| Adapts the connection hose clip to wing nuts | 14592 | 48 | 3.36 |

# Thermometers

## DESCRIPTION

Celsius & Fahrenheit scale.

| | Code | Standard Pack | Standard weight in kg |
|---|---|---|---|
| | 20594 | 20 | 2.1 |

# ZOO floating thermometers

## DESCRIPTION

Celsius & Fahrenheit scale.

| | Code | Standard Pack | Standard weight in kg |
|---|---|---|---|
| **Basic line. Desktop display. This includes: 6 models of each one: duck, dolphin, frog and whale** | 66058 | 1 | 1.6 |
| **Duck model** | 38613 | 1 | 3.5 |
| **Dolphin model** | 58652 | 1 | 3.5 |
| **Frog model** | 58653 | 1 | 3.5 |
| **Whale model** | 58654 | 1 | 3.5 |

# Net'n'Clean Integrated Cleaning System

## Integrated cleaning system

- The Net'N'Clean is an efficient cleaning system, consisting of a six outlet distributor valve that receives clean water from the filter and distributes it sequentially to a series of nozzles installed on the pool floor.
- This type of distribution from the bottom keeps the particles in suspension so they are collected by the skimmer and main drain and retained by the filter. It helps improve the use and efficiency of chemical products injected in the return piping and reduces heating costs by returning hot water along the bottom.

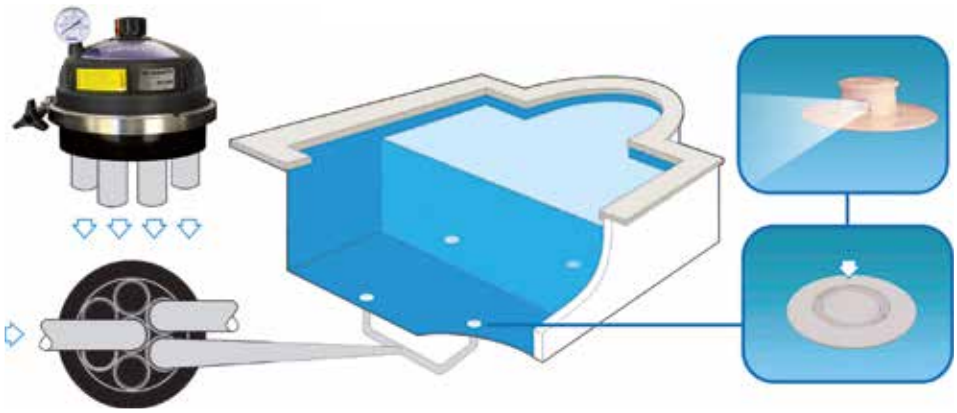

## Net'n'Clean - distributor valve Ø 50 mm

### DESCRIPTION

Six way distribution valve. This valve is part of the Net'n'Clean cleaning system which is integrated in the pool floor. It distributes water sequentially through its various branches. Made of plastic and AISI 316L it has high resistance to salt water. Maximum working pressure: 1.4 bars. Maximum flow: 15 $m^3$/h.
Connections:
7 x Ø 50 mm. 2 pop-up nozzles for branch recommended.

| | Code | Standard Pack | Standard weight in kg |
|---|---|---|---|
| **Net'n'Clean distributor valve: European model** | 21257 | 1 | 1.7 |

## Net'n'Clean - distributor valve Ø 63 mm

### DESCRIPTION

Distributor valve optimized for greater hydraulic performance. Maximum working pressure of 1.5 bars. Maximum flow of 25 $m^3$/h. Connections: 7 x Ø 63 mm or 7 x Ø 75 mm. From 2 to 5 nozzles per branch.

| | Code | Standard Pack | Standard weight in kg |
|---|---|---|---|
| **Net'N'Clean distributor valve Ø 63 mm** | 35079 | 1 | 5.6 |

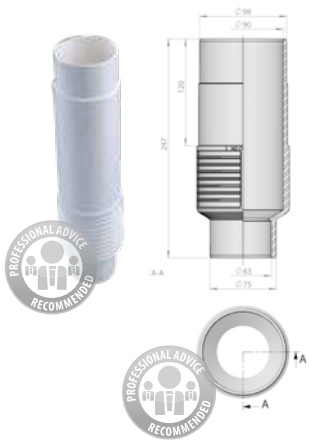

# Net'N'Clean reducing wall conduit for nozzles

## DESCRIPTION

Reducing conduit to install concrete Net'N'Clean nozzles (26985). Made in white PVC. Ø 50 mm inside & Ø 63 mm outside connections.

| | Code | Standard Pack | Standard weight in kg |
|---|---|---|---|
| Reducing wall conduit for nozzles | 21248 | 12 | 7.3 |

# Ø 90 mm wall conduit

## DESCRIPTION

PVC wall conduit. Cutting area of 120 mm for fitting it to the pool wall or floor. Ø 63 or Ø 75 connection, as required.

| | Code | Standard Pack | Standard weight in kg |
|---|---|---|---|
| Ø 90/Ø 63-Ø 75 mm wall conduit | 43590 | 9 | 7.3 |

For inlets:
Net'N'Clean: 43584
BCN 03: 43586 - 43587 - 43588 - 43589
Return inlet/suction nozzle for high flow rates: 41518 - 41519 - 41520 - 41521

Concrete

Concrete

Fibreglass

Liner

65232

# Ø 90 mm wall conduit

## DESCRIPTION

PVC wall conduit. Cutting area of 120 mm for fitting it to the pool wall or floor. Ø 63 or Ø 75 connection, as required.

| Nozzles | Code | Standard Pack | Standard weight in kg |
|---|---|---|---|
| For concrete pools: | | | |
| With swivel joint | 26985 | 12 | 4.14 |
| Fixed | 26986 | 12 | 3.78 |
| For polyester pools: | | | |
| Fixed | 21209 | 12 | 4.14 |
| For liner pools: | | | |
| Fixed, with PN10 metal insert | 28500 | 12 | 5.05 |
| Adjustable, with INSERTS | 43584 | 12 | 5.64 |
| Bodies | | | |
| For concrete pools: | | | |
| With swivel joint | 65230 | 12 | 4.44 |
| Fixed | 65231 | 12 | 4.44 |
| For polyester pools: | | | |
| Fixed | 65232 | 12 | 4.44 |

NET'N'CLEAN INTEGRATED CLEANING SYSTEM

# Inner assembly kit

## DESCRIPTION

Colours can be selected with the minimum number of parts. Existing pools can be renewed without any effort.

| Inner assembly kit | Code | Standard Pack | Standard weight in kg |
|---|---|---|---|
| White | 65234 | 12 | 4.4 |
| Beige | 65234CL090 | 12 | 4.4 |
| Light grey | 65234CL129 | 12 | 4.4 |
| Anthracite grey | 65234CL144 | 12 | 4.4 |

Concrete

Polyester

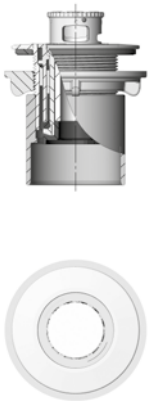

HOSES

# Hose connectors

| | Code | Standard Pack | Standard weight in kg |
|---|---|---|---|
| Ø 38 mm for connections to inlets 16328, 16329, 16330, 21644, 21645, in white ABS | 05684 | 12 | 1.0 |
| Ø 50 mm connections to inlets 00315, grey PP | 01392 | 12 | 1.0 |

# Hose fitting

## DESCRIPTION

White ABS plastic.

| | Code | Standard Pack | Standard weight in kg |
|---|---|---|---|
| For Ø 38 mm hose, male thread 1½" | 01393 | 12 | 1.0 |

# Hose cuffs

| Made in flexible blue PVC | Code | Standard Pack | Standard weight in kg |
|---|---|---|---|
| For Ø 38 mm (01372) hose Only for vac inlets 24415 | 07958 | 12 | 2.0 |
| For Ø 38 mm hose (01372) | 01385 | 12 | 2.0 |
| For Ø 50 mm hose (01373) | 01386 | 12 | 3.0 |
| Made in flexible white PVC | | | |
| For Ø 38 mm hose (01374-01375 01376-01377-01378) | 01387 | 12 | 2.0 |
| For Ø 50 mm hose (01379) | 01388 | 12 | 3.0 |

# Floating suction hose

## DESCRIPTION

Transparent blue Polyethylene hose.

| | Code | Standard Pack | Standard weight in kg |
|---|---|---|---|
| Ø 38 mm (1½") | 01372 | 30 m | 8.0 |
| Ø 50 mm (2") | 01373 | 30 m | 14.0 |

# Floating suction hose

## DESCRIPTION

Made of blue polyethylene. Includes terminals, except in the 30-m hose (01374, 01379).

| Ø 38 mm (1½") | Code | Standard Pack | Standard weight in kg |
|---|---|---|---|
| 30 m | 01374 | 1 | 12.0 |
| 15 m | 01375 | 1 | 5.6 |
| 12 m | 01376 | 1 | 4.5 |
| 10 m | 01377 | 1 | 3.0 |
| 8 m | 01378 | 1 | 3.0 |
| Ø 50 mm (2") | | | |
| 30 m | 01379 | 1 | 15.0 |

# Hose roller

## DESCRIPTION

For hoses of up to 15 metres.

| | Code | Standard Pack | Standard weight in kg |
|---|---|---|---|
| Hose roller | 66042 | 1 | 2.4 |

# 4 TECHNOLOGIES FOR POOL CLEANING

To clean a pool, multiple parameters must be considered when **chosing an automatic cleaning equipment**: shape and lining of the pool, pool size, cleaning expectations, etc.

**High technology Zodiac® cleaners** match the different features of a pool, the cleaning time and every budget.

**4 types of technologies** are currently available: electric cleaning, cordless cleaning, hydraulic cleaning and pressure cleaning.

## > ZODIAC® ELECTRIC ROBOTIC CLEANERS: A HIGH-PERFORMANCE, STAND-ALONE SYSTEM

**Separate from the filtration system** and simply connected to the mains power, they are Plug&Play and **stand-alone equipment.**

With no action required and **programmable** (cleaning time, area to be covered, etc.), they reach every corner of the pool, climb the walls, clean the water line and collect impurities in their own filter basket.

There are different models for all types of pools.

## > ZODIAC® CORDLESS POOL CLEANERS: PERFORMANCE WITH TOTAL FREEDOM

**Free from its cable**, the cordless cleaners are easy to use on a daily basis and take up little space. The long-lasting lithium-ion battery guarantees a **full cleaning cycle with no compromise on performance.**

The cordless range leverages the best of Zodiac technology to ensure the cleaning performance is maintained. For added convenience, the user interface is located on the robot and enables to check the battery status and easily start a cleaning cycle.

## > PRESSURE POLARIS® CLEANERS: THE POWER OF A HIGH-PRESSURE CLEAN

These cleaners **use the swimming pool's filtration pump as a power source** for even more efficient and precise high-pressure cleaning.
Instead of being connected to the suction, pressure cleaners are connected to the pool water return, using the vacuum point converted to discharge.
In this way, the pool skimmers remain active and maintain full surface filtration capacity.

Pressure cleaners work with a booster pump and have a canister that collects debris sucked in, preventing the pump pre-filter from becoming blocked.

## > ZODIAC® HYDRAULIC CLEANERS: A SIMPLE AND AFFORDABLE SOLUTION

Hydraulic robotic cleaners can be easily installed in the pool filtration system. In fact, they work on the energy produced by your pump.

Vacuum cleaners capture debris by suction and accumulate it in the pump pre-filter.

**More affordable** than electric cleaners, hydraulic cleaners are connected to a pool vacuum point or a skimmer and are **particularly suitable for the simplest pools** (with a flat floor or gentle slope or above-ground pools).

To optimise the efficiency of these accessories, it is essential to **ensure they are compatible with the pool lining**, filtration equipment, environment, etc.

# ELECTRIC POOL CLEANERS

## A stand-alone and efficient solution

The electric robots combine **the best of Zodiac® technology.**

Thanks to the embedded cyclone suction, a patented Zodiac® technology, **the cleaning performance is maintained throughout the cleaning cycle**. They even capture the finest debris without filter clogging.

Separate from the filtration system, these Plug&Play devices trap debris in their own filter basket, making them stand-alone.

### > TORNAX, EFFICIENCY PURE & SIMPLE

The Tornax robotic cleaner guarantees **efficient cleaning** of your pool, completely autonomously, thanks to its smart movement and its rotating brush, which removes debris before collecting it. Tornax is the **lightest** (5.5 kg) of all the Zodiac® robotic cleaners. It is feather-light, meaning it is quick, easy and **effortless** to operate. Tornax is designed not only to be easy to use but also easy to maintain, as the filter can be accessed from the top so it can be rinsed without touching the debris.

### > SWEEPY®, THE PERFORMANCE MADE SIMPLE

**Designed** to bring performance and ease of use for small pools, the Sweepy® range can effortlessly launch a cycle through a simple **push of a button that starts a pre-programmed optimized cleaning cycle**. Its powerful suction power combined with its large suction inlet of 23 cm allows to catch all type of debris present in the pool. Thanks to its tracks it can be used on all type of coatings in flat or slightly inclined pools floor. At the end of the cycle, the 3L filter is accessible from the top of the robot and designed with small handles so that it can be easily emptied and cleaned without touching the debris.

### > VOYAGER™, EXCEPTIONAL AGILITY

With its patented cyclonic suction, Voyager™ range adapts to all pools and all coatings. Thanks to **embedded sensors** such as gyroscope or accelerometer, the robotic cleaner offers **excellent coverage of each pool**. Also remotely accessible via the iAqualink® application. Its helical brushes, its **dual-stage filter canister** (60 and 150 microns) and its large suction inlet of 23 cm allows a thorough cleaning of all areas of the pool.

### > ALPHA iQ™, ULTRA-EFFICIENCY COMBINED WITH INTELLIGENCE

With its Sensor Nav System™, the Alpha iQ™ range identifies the configuration of your pool **to optimise movements** and cleaning time. The patented cyclone suction garantees **extremely powerful and long-lasting suction**. Thanks to its patented **Lift System**, Alpha iQ™ is lighter when removing it from the water. Monitor cleaning progress at any time through the **intuitive interface** of the iAqualink® application. Alpha iQ™ is **upgradeable** thanks to possible optimisations and automatic remote updates.

# CYCLONIC SUCTION

Patented technology for powerful cleaning

### > HOW DOES IT WORK?

Thanks to its unique design, Vortex cleaners feature **Cyclonic Suction** : the flow is **keeping debris in suspension inside the filter** and allows a longer lasting suction while **limiting the clogging.**

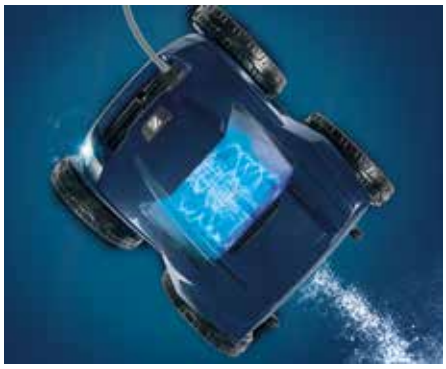

Robotic cleaners equipped with cyclonic suction can be found here:
**VOYAGER™ , XA Type™, CNX™, Vortex™, Alpha iQ™, Freerider™, CNX-Li™**

# LIFT SYSTEM

Patented innovation for easier removal from the water

### > 20% LESS EFFORT

The robotic cleaner positions itself on the chosen wall and cleans right up to the water line. Then a powerful waterjet propels it from the water: **which means you can remove the robot from the water with just 20% of the effort**.

Robotic cleaners equipped with Lift system:
**RE 4600 iQ, RE 4700 iQ, RA 6300 iQ,**
**RA 6500 iQ, RA 6700 iQ, RA 6800 iQ, RA 6900 iQ and RF 5600 iQ**

# SENSOR NAV SYSTEM™

Smart navigation system for efficient and customized cleaning

### > PERSONALISED CLEANING OF EACH POOL

**Sensor Nav System™ gathers different embedded features which enable the robotic cleaners to learn all about each pool and to adapt its cleaning** in the smartest way.

- Recognition and analysis of the pool dimensions and shape to provide an optimized navigation pattern and cleaning time for each pool.
- Focusing on common dirty areas such as bottom of the walls or flat areas of the pool

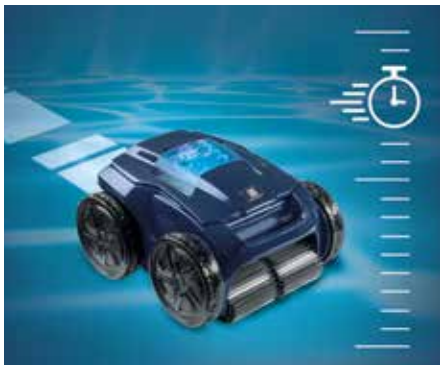

Robotic cleaners equipped with Smart Nav system™:
**Alpha iQ™**

# SWIVEL

Avoid cable tangling

### > HOW DOES IT WORK?

Automatic swivel system prevents cable tangling during cleaner operation in the pool.

**The cleaner efficiency is optimized and the cable storage is easier.**

Robots equipped with Swivel: **RE 4700 iQ, RA 6300 iQ, RA 6500 iQ, RA 6700 iQ, RA 6800 iQ** and **RA 6900 iQ**

# 4-WHEEL DRIVE (4WD)

Effective cleaning of all surfaces

### > GETTING OVER OBSTACLES MORE EASILY

Equipped with **4-wheel drive**, robots from the **Vortex™ PRO 4WD** and **ALPHA iQ™** ranges adapt to all situations.

### > OPTIMAL COVERAGE AND PERFECT GRIP

Thanks to their excellent grip, robots from the Vortex™ **PRO 4WD** and **ALPHA iQ™** ranges get into the tiniest corners of the pool and clean **all kinds of surface**. The robots ensure **the pool is cleaned perfectly**.

Robotic cleaners equipped with 4 Wheel-drive:
**ALPHA iQ and VORTEX 4WD**

# DUAL STAGE FILTRATION

Finer filtration and long lasting suction

### > 2 FILTERS FOR LONG LASTING SUCTION AND FINER DEBRIS PICK UP

These 2 combined filters offer a larger mesh surface that a standard filter which allows to postpone the clogging effects. This unique design also allows the ability to use the larger mesh filter alone, which can be very useful at the beginning of the season

### > HOW DOES IT WORK?

2 imbricated filters : the dirty water flows through a coarse layer first (150µ) and a finer one after (60µ). The coarse filter will retain the larger debris and the finer one will then allow a finer filtration.

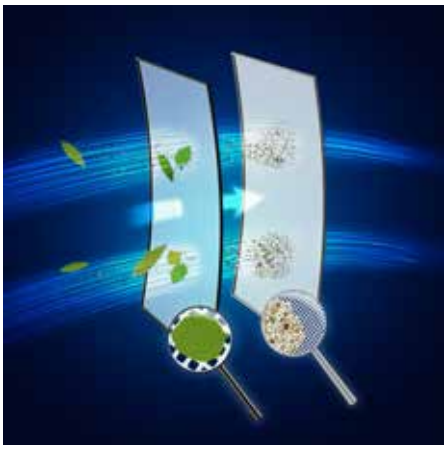

Robotic cleaners equipped with Dual-stage filtration:
**RE 4300, RE 4400 iQ, RE 4600 iQ, RE 4700 iQ, RA 6800 iQ, RA 6900 iQ, RF 5400 iQ and RF 5600 iQ**

# ELECTRIC CLEANERS

## A stand-alone and efficient solution

| COMPARATIVE TABLE OF RANGES<br>TECHNICAL SPECIFICATIONS | | RT 2100 | RT 3200 | SWY 3500 | RE 4100 | RE 4200 | RE 4300 | RE 4400 iQ | RE 4600 iQ |
|---|---|---|---|---|---|---|---|---|---|
| | | | | | | | | | |
| Types of pools | Surfaces | Liner, polyester hull, reinforced PVC, painted concrete, Tiles * | Liner, polyester hull, reinforced PVC, painted concrete, Tiles * | Tiles, liner, polyester hull, reinforced PVC, painted concrete | Tiles, liner, polyester hull, reinforced PVC, painted concrete | Tiles, liner, polyester hull, reinforced PVC, painted concrete | Tiles, liner, polyester hull, reinforced PVC, painted concrete | Tiles, liner, polyester hull, reinforced PVC, painted concrete | Tiles, liner, polyester hull, reinforced PVC, painted concrete |
| | Shapes | Rectangular, oval, free shape | Rectangular, oval, free shape | Rectangular, oval, free shape | Rectangular, oval, free shape | Rectangular, oval, free shape | Rectangular, oval, free shape | Rectangular, oval, free shape | Rectangular, oval, free shape |
| | Bottom | Flat, gentle slope, composite slope | Flat, gentle slope, composite slope | Flat, gentle slope, composite slope | Flat, gentle slope, composite slope, diamond shape | Flat, gentle slope, composite slope, diamond shape | Flat, gentle slope, composite slope, diamond shape | Flat, gentle slope, composite slope, diamond shape | Flat, gentle slope, composite slope, diamond shape |
| | Size | 8 x 4 m (14 m cable) | 9 x 4 m (16,5m cable) | 8 x 4 m (14 m cable) | 9 x 4 m (15m cable) | 10 x 5m (15m cable) | 10 x 5m (15m cable) | 12 x 6 m (18m cable) | 12 x 6 m (18m cable) |
| Performance | Traction | Tracks - 1 motor | Tracks - 1 motor | Tracks - 2 motors | Tracks - 2 motors | Tracks - 2 motors | Tracks - 2 motors | Tracks - 2 motors | Tracks - 2 motors |
| | Cleaning areas | Floor | Floor / walls | Floor / walls / waterline | Floor / walls / waterline | Floor / walls / waterline | Floor / walls / waterline | Floor / walls / waterline | Floor / walls / waterline |
| | Cyclonic Suction | - | - | ✓ | ✓ | ✓ | ✓ | ✓ | ✓ |
| | Filtering level | 100µ | 100µ | 100µ | 100µ | 100µ | 150/60µ | 150/60µ | 150/60µ |
| | Filter capacity | 3 L | 3 L | 3 L | 4 L | 4 L | 4 L | 4 L | 4 L |
| | Swivel | - | - | - | - | - | - | - | - |
| | Sensor Nav System™ | - | - | - | - | - | - | - | - |
| | Remote control | - | - | - | - | - | - | - | **✓ via the app** |
| | Type of brush | Standard | Standard | Standard | Helix shaped | Helix shaped | Helix shaped | Helix shaped | Helix shaped |
| Cycles | Number of cycles | 1 | 1 | 1 | 1 | 2 | 2 | 2 | 2 |
| | Cleaning cycles | Floor | Floor / walls | Floor / walls / waterline | Floor / walls / waterline | Floor only Floor / walls / waterline | Floor only Floor / walls / waterline | Floor only Floor / walls / waterline | Floor only Floor / walls / waterline |
| | Manual cleaning time adjustment | - | - | - | - | - | - | - | **✓ via the app** |
| Ease of use | iAqualink® app control | - | - | - | - | - | - | ✓ | ✓ |
| | Lift System | - | - | - | - | - | - | - | ✓ |
| | 7-day timer | - | - | - | - | - | - | - | - |
| | Full filter indicator | - | - | - | - | - | - | - | - |
| | Transparent window | - | ✓ | - | - | ✓ | ✓ | ✓ | ✓ |
| | Illuminated filter | - | - | - | - | - | - | ✓ | ✓ |
| | Type of filter | Rigid Filter canister / Top access | Rigid Filter canister / Top access | Rigid Filter canister / Top access | Rigid Filter canister / Top access | Rigid Filter canister / Top access | Rigid Filter canister / Top access | Rigid Filter canister / Top access | Rigid Filter canister / Top access |
| | Trolley | - | - | - | - | - | - | - | ✓ |
| Advanced app features | Water tempera-ture display | - | - | - | - | - | - | - | - |
| | Spot cleaning mode | - | - | - | - | - | - | - | - |
| | Warranty | 2 years | 2 years | 2 years | 3 years | 3 years | 3 years | 3 years | 3 years |

*For optimal cleaner behavior in some tile pools, it might be necessary to use the specific tile brush accessory.

## COMPARATIVE TABLE OF RANGES

TECHNICAL SPECIFICATIONS

| | | RE 4700 iQ | RA 6300 iQ | RA 6500 iQ | RA 6700 iQ | RA 6800 iQ | RA 6900 iQ |
|---|---|---|---|---|---|---|---|
| | | | | | | | |
| Types of pools | Surfaces | Tiles, liner, polyester hull, reinforced PVC, painted concrete | Tiles, liner, polyester hull, reinforced PVC, painted concrete | Tiles, liner, polyester hull, reinforced PVC, painted concrete | Tiles, liner, polyester hull, reinforced PVC, painted concrete | Tiles, liner, polyester hull, reinforced PVC, painted concrete | Tiles, liner, polyester hull, reinforced PVC, painted concrete |
| | Shapes | Rectangular, oval, free shape | Rectangular, oval, free shape | Rectangular, oval, free shape | Rectangular, oval, free shape | Rectangular, oval, free shape | Rectangular, oval, free shape |
| | Bottom | Flat, gentle slope, composite slope, diamond shape | Flat, gentle slope, composite slope, diamond shape | Flat, gentle slope, composite slope, diamond shape | Flat, gentle slope, composite slope, diamond shape | Flat, gentle slope, composite slope, diamond shape | Flat, gentle slope, composite slope, diamond shape |
| | Size | 12 x 6 m (18m with Swivel cable) | 12 x 6 m (18m with Swivel cable) | 12 x 6 m (18m with Swivel cable) | 15 x 7 m (21m with Swivel cable) | 15 x 7 m (21m with Swivel cable) | 20 x 10 m (25m with Swivel cable) |
| Performance | Traction | Tracks - 2 motors | 4 wheel drive - 2 motors | 4 wheel drive - 2 motors | 4 wheel drive - 2 motors | 4 wheel drive - 2 motors | 4 wheel drive - 2 motors |
| | Cleaning areas | Floor / walls / waterline | Floor / walls / waterline | Floor / walls / waterline | Floor / walls / waterline | Floor / walls / waterline | Floor / walls / waterline |
| | Cyclonic Suction | ✓ | ✓ | ✓ | ✓ | ✓ | ✓ |
| | Filtering level | 150/60µ | 60µ | 60µ | 60µ | 150/60µ | 150/60µ |
| | Filter capacity | 4 L | 5 L | 5 L | 5 L | 5 L | 5 L |
| | Swivel | ✓ | ✓ | ✓ | ✓ | ✓ | ✓ |
| | Sensor Nav System™ | - | ✓ | ✓ | ✓ | ✓ | ✓ |
| | Remote control | **✓ via the app** | - | **✓ via the app** | **✓ via the app** | **✓ via the app** | **✓ via the app** |
| | Type of brush | Helix shaped | Contact + | Contact + | Contact + | Contact + | Contact + |
| Cycles | Number of cycles | 2 | 2 | Multiple | Multiple | Multiple | Multiple |
| | Cleaning cycles | Floor only<br>Floor / walls / waterline | Quick floor only<br>Smart floor/ walls / waterline (calculated time) | Quick floor only<br>Smart floor/ walls / waterline (calculated time)<br>Ultra floor / walls / waterline | Quick floor only<br>Smart floor/ walls / waterline (calculated time)<br>Ultra floor / walls / waterline<br>Waterline only | Quick floor only<br>Smart floor/ walls / waterline (calculated time)<br>Ultra floor / walls / waterline<br>Waterline only | Multiple from 0h30 to 6h with preset cycles<br>Quick floor only<br>Smart floor/ walls / waterline (calculated time)<br>Ultra floor / walls / waterline<br>Waterline only |
| | Manual cleaning time adjustment | **✓ via the app** | - | ✓ | ✓ | ✓ | ✓ |
| Ease of use | iAqualink® app control | ✓ | ✓ | ✓ | ✓ | ✓ | ✓ |
| | Lift System | ✓ | ✓ | ✓ | ✓ | ✓ | ✓ |
| | 7-day timer | - | - | ✓ | ✓ | ✓ | ✓ |
| | Full filter indicator | - | ✓ | ✓ | ✓ | ✓ | ✓ |
| | Transparent window | ✓ | ✓ | ✓ | ✓ | ✓ | ✓ |
| | Illuminated filter | ✓ | ✓ | ✓ | ✓ | ✓ | ✓ |
| | Type of filter | Rigid Filter canister / Top access | Rigid Filter canister / Top access | Rigid Filter canister / Top access | Rigid Filter canister / Top access | Rigid Filter canister / Top access | Rigid Filter canister / Top access |
| | Trolley | ✓ | ✓ | ✓ | ✓ | ✓ | ✓ |
| Advanced app features | Water temperature display | - | - | - | **✓ (info in app)** | **✓ (info in app)** | **✓ (info in app)** |
| | Spot cleaning mode | - | - | - | ✓ | ✓ | ✓ |
| | Warranty | 3 years | 4 years** | 4 years** | 4 years** | 4 years** | 4 years** |

** 3 years + 1 year if the cleaner is paired to iAqualink®

# TORNAX

## Efficiency, pure and simple

Cleans the pool floor
(RT 2100)

Cleans floor and walls
(RT 3200)

Light for effortless handling

Easy-to-clean filter

| COMPARATIVE TABLE OF RANGES<br>TECHNICAL SPECIFICATIONS | | RT 2100 | RT 3200 |
|---|---|---|---|
| | | | |
| Types of pools | Surfaces | Liner, polyester hull, reinforced PVC, painted concrete, Tiles * | Liner, polyester hull, reinforced PVC, painted concrete, Tiles * |
| | Shapes | Rectangular, oval, free shape | Rectangular, oval, free shape |
| | Size | 8 x 4 m<br>(14 m cable) | 9 x 4 m<br>(16,5m cable) |
| Performance | Traction | Tracks - 1 motor | Tracks - 1 motor |
| | Cleaning areas | Floor | Floor / walls |
| | Cyclonic Suction | - | - |
| | Filtering level | 100µ | 100µ |
| | Filter capacity | 3 L | 3 L |
| | Swivel | - | - |
| | Sensor Nav System™ | - | - |
| | Remote control | - | - |
| Cycles | Number of cycles | 1 | 1 |
| | Cleaning cycles | Floor | Floor / walls |
| | Manual cleaning time adjustment | - | - |
| Ease of use | iAqualink® app control | - | - |
| | Lift System | - | - |
| | 7-day timer | - | - |
| | Full filter indicator | - | - |
| | Transparent window | - | ✓ |
| | Illuminated filter | - | - |
| | Type of filter | Rigid Filter canister / Top access | Rigid Filter canister / Top access |
| | Trolley | - | - |
| | Warranty | 2 years | 2 years |

*For optimal cleaner behavior in some tile pools, it might be necessary to use the specific tile brush accessory.

ROBOTIC POOL CLEANERS

# RT 2100 - TORNAX

Efficiency, Pure And Simple

+ Efficient floor cleaning
+ Lightweight for effortless handling
+ Easy clean filter

2 YEAR WARRANTY

## REFERENCE

| | |
|---|---|
| **Sku Reference** | WR000092 |

## ACCESSORIES INCLUDED IN THE PACK

| | | |
|---|---|---|
| Control box | Fine Filter canister 100µ | Control box base |

## OPTIONAL ACCESSORIES (NOT INCLUDED)

| Ultra-fine filter canister 60µ | Fine filter canister 100µ | Large debris filter canister 200µ | Trolley | Special tile brush |
|---|---|---|---|---|
| R0763100 | R0762900 | R0763000 | R0767600 | R0774900 |

## FOR WHICH TYPE OF POOLS?

| | |
|---|---|
| Types of pools | Private in-ground pools,Above ground pools,With rigid walls |
| Maximum pool dimensions | 8 x 4 m |
| Pool shape | Oval,Rectangular,Free shape |
| Pool floor | Composite slope,Flat,Gentle Slope |
| Pool surface | Liner,Painted concrete,Polyester hull,Reinforced PVC,Tiles* |

## DESCRIPTION

| | |
|---|---|
| App Control | No |
| Cleaning areas | Floor |
| Cleaning Cycles Numbers | 1 cycle |
| Cleaning Cycles | Floor: 2h30 |
| Timer | No |
| Power Supply - Connection | Autonomous, connected to 230V mains supply before the transformer |
| Cleaning steering | Pre-programmed |
| Drive system | Tracks |
| Drive system motors | 1 motor |
| Cleaning transmission | Gear transmission |
| Pressure sensor | No |
| Cleaning brushes | Yes |
| Type of brushes | Front brush |
| Lift system | No |
| Transparent window | No |
| Full filter indicator | No |
| Remote control | No |
| Cleaning safety | Deck system,Out of water safety,Diagnostic,Electronic motor protector |
| Filtration system | Rigid Filter canister |
| Filtration access | Top access |
| Water temperature | No |
| Units/pallet | 36 |

## TECHNICAL SPECIFICATIONS

| | |
|---|---|
| Power supply | 100-240 VAC / 50-60 Hz |
| Number of motors | 2 |
| Operating Power | 100 W |
| Cable length and hose length | 14 m |
| Filtering surface | 480 $cm^2$ |
| Filtration Level | 100µ |
| Filtering capacity | 3 L |
| Inlet suction size | 17 cm |
| Product Dimensions | 37 x 29 x 30 cm |
| Packaging Dimensions | 56 x 37 x 38 cm |
| Product Weight | 5.5 kg |
| Packaged Weight | 10 kg |

*For optimal cleaner behavior in some tile pools, it might be necessary to use the specific tile brush accessory.

ZODIAC®

ROBOTIC POOL CLEANERS

# RT 3200 - TORNAX

Effectiveness, Pure And Simple

+ Efficient floor and walls cleaning
+ Lightweight for effortless handling
+ Easy clean filter

2 YEAR WARRANTY

## REFERENCE

| | |
|---|---|
| **Sku Reference** | WR000093 |

## ACCESSORIES INCLUDED IN THE PACK

| | | |
|---|---|---|
| Control box | Fine Filter canister 100µ | Control box base |

## OPTIONAL ACCESSORIES (NOT INCLUDED)

| Ultra-fine filter canister 60µ | Fine filter canister 100µ | Large debris filter canister 200µ | Trolley | Protective cover | Special tile brush |
|---|---|---|---|---|---|
| R0763100 | R0762900 | R0763000 | R0767600 | R0568100 | R0774900 |

## FOR WHICH TYPE OF POOLS?

| | |
|---|---|
| Types of pools | Private in-ground pools,Above ground pools,With rigid walls |
| Maximum pool dimensions | 9 x 4 m |
| Pool shape | Oval,Rectangular,Free shape |
| Pool floor | Flat,Gentle Slope,Composite slope |
| Pool surface | Liner,Painted concrete,Polyester hull,Reinforced PVC,Tiles* |

## DESCRIPTION

| | |
|---|---|
| App Control | No |
| Cleaning areas | Floor / walls |
| Cleaning Cycles Numbers | 1 cycle |
| Cleaning Cycles | Floor / walls: 3h |
| Timer | No |
| Power Supply - Connection | Autonomous, connected to 230V mains supply before the transformer |
| Cleaning steering | Pre-programmed |
| Drive system | Tracks |
| Drive system motors | 1 motor |
| Cleaning transmission | Gear transmission |
| Pressure sensor | No |
| Cleaning brushes | Yes |
| Type of brushes | Front brush |
| Lift system | No |
| Transparent window | Yes |
| Full filter indicator | No |
| Remote control | No |
| Cleaning safety | Deck system,Out of water safety,Diagnostic,Electronic motor protector |
| Filtration system | Rigid Filter canister |
| Filtration access | Top access |
| Water temperature | No |
| Units/pallet | 36 |

## TECHNICAL SPECIFICATIONS

| | |
|---|---|
| Power supply | 100-240 VAC / 50-60 Hz |
| Number of motors | 2 |
| Operating Power | 100 W |
| Cable length and hose length | 16,5 m |
| Filtering surface | 480 $cm^2$ |
| Filtration Level | 100µ |
| Filtering capacity | 3 L |
| Inlet suction size | 17 cm |
| Product Dimensions | 37 x 29 x 30 cm |
| Packaging Dimensions | 56 x 37 x 38 cm |
| Product Weight | 5.5 kg |
| Packaged Weight | 11 kg |

*For optimal cleaner behavior in some tile pools, it might be necessary to use the specific tile brush accessory.

# SWEEPY®

## PERFORMANCE MADE SIMPLE

Large suction inlet

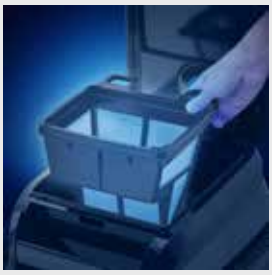

3L filter

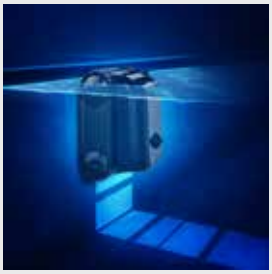

Clean floor, walls and waterline

Intuitive control box

### DESIGNED FOR SIMPLE POOL NEEDS

Designed to bring simplicity and performance to flat or sightly inclined pools, the Sweepy® can handle any type of pool surface thanks to its tracks and is fitted to clean in one cycle pools up to 8 x 4 m with its 14 m long cable.

### CYCLONIC PERFORMANCE

Equipped with Zodiac patented technology cyclonic suction, Sweepy® performance is maintained throughout its cleaning cycle. Combined with its active front brush, and a cycle that covers the floor, walls and waterline, the cleaner will easily remove the debris present in the pool.

### EASE OF USE

At the end of the cycle, its 3L filter is accessible from the top of the cleaner and can be moved out without having to be in contact with the debris. A simple jet of water is enough to clean rapidly the filter canister and put back in place in the robot for its next cycle. The control box is simple and intuitive to use with only a start and stop button to manage the cleaning cycle.

ZODIAC®

ROBOTIC POOL CLEANERS

# SWY 3500 - Sweepy®

PERFORMANCE MADE SIMPLE

+ Designed for simple pool needs
+ Cyclonic suction
+ Easy to use

2 YEAR WARRANTY

CYCLONIC SUCTION

## REFERENCE

| | |
|---|---|
| **Sku Reference** | WR000583 |

## ACCESSORIES INCLUDED IN THE PACK

| | | |
|---|---|---|
| Control Box | Fine Filter canister 100µ | Control box base |

## OPTIONAL ACCESSORIES (NOT INCLUDED)

| | |
|---|---|
| Large debris filter canister 150µ | Trolley |
| R0999700 | R0639500 |

## FOR WHICH TYPE OF POOLS?

| | |
|---|---|
| Types of pools | Private in-ground pools,Above ground pools,With rigid walls |
| Maximum pool dimensions | 8 x 4 m |
| Pool shape | Oval,Rectangular,Free shape |
| Pool floor | Composite slope,Flat,Gentle Slope |
| Pool surface | Liner,Painted concrete,Polyester hull,Reinforced PVC,Tiles |

## DESCRIPTION

| | |
|---|---|
| App Control | No |
| Cleaning areas | Floor / walls / waterline |
| Cleaning Cycles Numbers | 1 cycle |
| Cleaning Cycles | Floor / walls / waterline: 2h |
| Timer | No |
| Power Supply - Connection | Autonomous, connected to 230V mains supply before the transformer |
| Cleaning steering | Pre-programmed |
| Drive system | Tracks |
| Drive system motors | 2 motors |
| Cleaning transmission | Gear transmission |
| Pressure sensor | No |
| Cleaning brushes | Yes |
| Type of brushes | Front brush |
| Lift system | No |
| Transparent window | No |
| Full filter indicator | No |
| Remote control | No |
| Cleaning safety | Deck system,Out of water safety,Diagnostic,Electronic motor protector |
| Filtration system | Rigid Filter canister |
| Filtration access | Top access |
| Water temperature | No |
| Units/pallet | 20 |

## TECHNICAL SPECIFICATIONS

| | |
|---|---|
| Power supply | 220-240 VAC / 50-60 Hz |
| Number of motors | 3 |
| Operating Power | 150 W |
| Cable length and hose length | 14 m |
| Filtering surface | 526 $cm^2$ |
| Filtration Level | 100µ |
| Filtering capacity | 3 L |
| Inlet suction size | 23 cm |
| Product Dimensions | x x cm |
| Packaging Dimensions | 56 x 56 x 37 cm |
| Product Weight | kg |
| Packaged Weight | kg |

# VOYAGER™

## Exceptional Agility

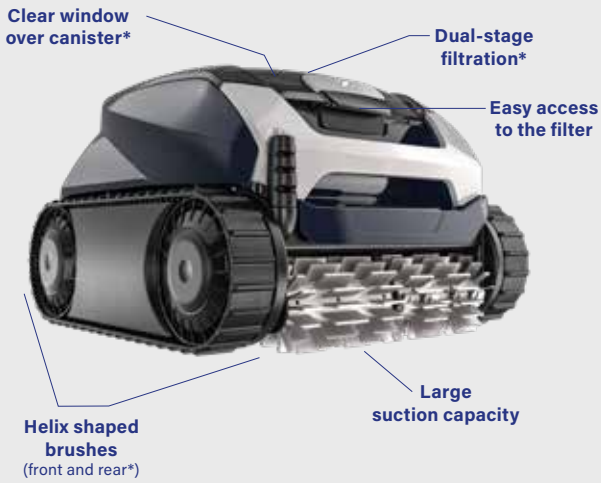


*Depending on models

Cyclone Suction

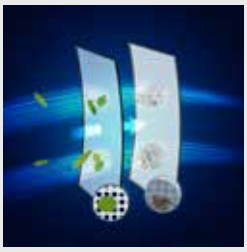

Dual-stage filtration

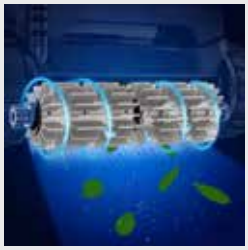

Helix brushes

Intuitive user interface

## COMPARATIVE TABLE OF RANGES

TECHNICAL SPECIFICATIONS

| | | RE 4100 | RE 4200 | RE 4300 | RE 4400 iQ | RE 4600 iQ | RE 4700 iQ |
|---|---|---|---|---|---|---|---|
| | | | | | | | |
| Types of pools | Surfaces | Tiles, liner, polyester hull, reinforced PVC, painted concrete | Tiles, liner, polyester hull, reinforced PVC, painted concrete | Tiles, liner, polyester hull, reinforced PVC, painted concrete | Tiles, liner, polyester hull, reinforced PVC, painted concrete | Tiles, liner, polyester hull, reinforced PVC, painted concrete | Tiles, liner, polyester hull, reinforced PVC, painted concrete |
| | Shapes | Rectangular, oval, free shape | Rectangular, oval, free shape | Rectangular, oval, free shape | Rectangular, oval, free shape | Rectangular, oval, free shape | Rectangular, oval, free shape |
| | Bottom | Flat, gentle slope, composite slope, diamond shape | Flat, gentle slope, composite slope, diamond shape | Flat, gentle slope, composite slope, diamond shape | Flat, gentle slope, composite slope, diamond shape | Flat, gentle slope, composite slope, diamond shape | Flat, gentle slope, composite slope, diamond shape |
| | Size | 9 x 4 m (15m cable) | 10 x 5m (15m cable) | 10 x 5m (15m cable) | 12 x 6 m (18m cable) | 12 x 6 m (18m cable) | 12 x 6 m (18m cable) |
| Performance | Traction | Tracks - 2 motors | Tracks - 2 motors | Tracks - 2 motors | Tracks - 2 motors | Tracks - 2 motors | Tracks - 2 motors |
| | Cleaning areas | Floor / walls / waterline | Floor / walls / waterline | Floor / walls / waterline | Floor / walls / waterline | Floor / walls / waterline | Floor / walls / waterline |
| | Cyclonic Suction | ✓ | ✓ | ✓ | ✓ | ✓ | ✓ |
| | Filtering level | 100µ | 100µ | 150/60µ | 150/60µ | 150/60µ | 150/60µ |
| | Filter capacity | 4 L | 4 L | 4 L | 4 L | 4 L | 4 L |
| | Swivel | - | - | - | - | - | ✓ |
| | Sensor Nav System™ | - | - | - | - | - | - |
| | Remote control | - | - | - | - | ✓ via the app | ✓ via the app |
| | Type of brush | Helix shaped | Helix shaped | Helix shaped | Helix shaped | Helix shaped | Helix shaped |
| Cycles | Number of cycles | 1 | 2 | 2 | 2 | 2 | 2 |
| | Cleaning cycles | Floor / walls / waterline | Floor only Floor / walls / waterline | Floor only Floor / walls / waterline | Floor only Floor / walls / waterline | Floor only Floor / walls / waterline | Floor only Floor / walls / waterline |
| | Manual cleaning time adjustment | - | - | - | - | ✓ | ✓ |
| Ease of use | iAqualink® app control | - | - | - | ✓ | ✓ | ✓ |
| | Lift System | - | - | - | - | ✓ | ✓ |
| | 7-day timer | - | - | - | - | - | - |
| | Full filter indicator | - | - | - | - | - | - |
| | Transparent window | - | ✓ | ✓ | ✓ | ✓ | ✓ |
| | Illuminated filter | - | - | - | ✓ | ✓ | ✓ |
| | Type of filter | Rigid Filter canister / Top access | Rigid Filter canister / Top access | Rigid Filter canister / Top access | Rigid Filter canister / Top access | Rigid Filter canister / Top access | Rigid Filter canister / Top access |
| | Trolley | - | - | - | - | ✓ | ✓ |
| Advanced app features | Water temperature display | - | - | - | - | - | - |
| | Spot cleaning mode | - | - | - | - | - | - |
| | Warranty | 3 years | 3 years | 3 years | 3 years | 3 years | 3 years |

ZODIAC®

ROBOTIC POOL CLEANERS

# RE 4100 - VOYAGER™

Exceptional agility

**+ Optimal cleaning performance: Patented cyclonic suction / Helix shaped brushes / Large suction capacity**

**+ Optimal coverage: Designed to work in all pool shapes or surfaces / Tracks / accelerometer & gyroscope sensors**

**+ Ease of use: Top access filter**

3 YEAR WARRANTY

CYCLONIC SUCTION

## REFERENCE

| | |
|---|---|
| **Sku Reference** | WR000498 |

## ACCESSORIES INCLUDED IN THE PACK

| | | |
|---|---|---|
| Control box | Fine Filter canister 100µ | Control box base |

## OPTIONAL ACCESSORIES (NOT INCLUDED)

| Main canister 200µ for single filter | Main canister 150µ for dual stage filter | Over canister 60µ for dual stage filter | Protective cover | Trolley |
|---|---|---|---|---|
| R0897700 | R0897600 | R0898100 | R0568100 | R0639500 |

## FOR WHICH TYPE OF POOLS?

| | |
|---|---|
| Types of pools | Private in-ground pools,Above ground pools,With rigid walls |
| Maximum pool dimensions | 9 x 4 m |
| Pool shape | Oval,Rectangular,Free shape |
| Pool floor | Flat,Gentle Slope,Composite slope,Diamond shape |
| Pool surface | Liner,Painted concrete,Polyester hull,Reinforced PVC,Tiles |

## DESCRIPTION

| | |
|---|---|
| App Control | No |
| Cleaning areas | Floor / walls / waterline |
| Cleaning Cycles Numbers | 1 cycle |
| Cleaning Cycles | Floor / walls / waterline: 2h |
| Timer | No |
| Power Supply - Connection | Autonomous, connected to 230V mains supply before the transformer |
| Cleaning steering | Pre-programmed |
| Drive system | Tracks |
| Drive system motors | 2 motors |
| Cleaning transmission | Gear transmission |
| Pressure sensor | No |
| Cleaning brushes | Yes |
| Type of brushes | Front brush |
| Lift system | No |
| Transparent window | No |
| Full filter indicator | No |
| Remote control | No |
| Cleaning safety | Deck system,Out of water safety,Diagnostic,Electronic motor protector |
| Filtration system | Rigid Filter canister |
| Filtration access | Top access |
| Water temperature | No |
| Units/pallet | 20 |

## TECHNICAL SPECIFICATIONS

| | |
|---|---|
| Power supply | 220-240 VAC / 50-60 Hz |
| Number of motors | 3 |
| Operating Power | 150 W |
| Cable length and hose length | 15 m |
| Filtering surface | 526 $cm^2$ |
| Filtration Level | 100µ |
| Filtering capacity | 4 L |
| Inlet suction size | 23 cm |
| Product Dimensions | 43 x 40 x 30 cm |
| Packaging Dimensions | 56 x 56 x 37 cm |
| Product Weight | 8 kg |
| Packaged Weight | 14 kg |

ROBOTIC POOL CLEANERS

# RE 4200 - VOYAGER™

Exceptional Agility

**+ Optimal cleaning performance: Patented cyclonic suction / Helix shaped brushes / Large suction capacity**

**+ Integrated agility: Designed to work in all pool shapes or surfaces / Tracks / accelerometer & gyroscope sensors**

**+ Ease of use: Top access filter / transparent window**

3 YEAR WARRANTY

CYCLONIC SUCTION

## REFERENCE

| | |
|---|---|
| **Sku Reference** | WR000331 |

## ACCESSORIES INCLUDED IN THE PACK

| | | |
|---|---|---|
| | | |
| Control box | Control box base | Fine Filter canister 100µ |

## OPTIONAL ACCESSORIES (NOT INCLUDED)

| Main canister 200µ for single filter | Main canister 150µ for dual stage filter | Over canister 60µ for dual stage filter | Protective cover | Trolley |
|---|---|---|---|---|
| R0897700 | R0897600 | R0898100 | R0568100 | R0639500 |

## FOR WHICH TYPE OF POOLS?

| | |
|---|---|
| Types of pools | Private in-ground pools,Above ground pools,With rigid walls |
| Maximum pool dimensions | 9 x 4 m |
| Pool shape | Oval,Rectangular,Free shape |
| Pool floor | Flat,Gentle Slope,Composite slope,Diamond shape |
| Pool surface | Liner,Painted concrete,Polyester hull,Reinforced PVC,Tiles |

## DESCRIPTION

| | |
|---|---|
| App Control | No |
| Cleaning areas | Floor / walls / waterline |
| Cleaning Cycles Numbers | 2 cycles |
| Cleaning Cycles | Floor only: 1h30 - Floor / walls / waterline: 2h30 |
| Timer | No |
| Power Supply - Connection | Autonomous, connected to 230V mains supply before the transformer |
| Cleaning steering | Pre-programmed |
| Drive system | Tracks |
| Drive system motors | 2 motors |
| Cleaning transmission | Gear transmission |
| Pressure sensor | No |
| Cleaning brushes | Yes |
| Type of brushes | Front brush |
| Lift system | No |
| Transparent window | Yes |
| Full filter indicator | No |
| Remote control | No |
| Cleaning safety | Deck system,Out of water safety,Diagnostic,Electronic motor protector |
| Filtration system | Rigid Filter canister |
| Filtration access | Top access |
| Water temperature | No |
| Units/pallet | 20 |

## TECHNICAL SPECIFICATIONS

| | |
|---|---|
| Power supply | 220-240 VAC / 50-60 Hz |
| Number of motors | 3 |
| Operating Power | 150 W |
| Cable length and hose length | 15 m |
| Filtering surface | 526 $cm^2$ |
| Filtration Level | 100µ |
| Filtering capacity | 4 L |
| Inlet suction size | 23 cm |
| Product Dimensions | 43 x 40 x 30 cm |
| Packaging Dimensions | 56 x 56 x 37 cm |
| Product Weight | 8 kg |
| Packaged Weight | 14 kg |

ZODIAC®

ROBOTIC POOL CLEANERS

# RE 4300 - VOYAGER™

Exceptional agility

+ Optimal cleaning performance: Patented cyclonic suction / Helix shaped brushes / Progressive dual stage filtration 150/60µ
+ Integrated agility: Designed to work in all pool shapes or surfaces / tracks / accelerometer & gyroscope sensors
+ Ease of use: Top access filter / transparent window

3 YEAR WARRANTY | CYCLONIC SUCTION | DUAL FILTRATION

## REFERENCE

| | |
|---|---|
| **Sku Reference** | WR000449 |

## ACCESSORIES INCLUDED IN THE PACK

| | | |
|---|---|---|
| Control box | Control box base | Dual Filter canister 60µ / 150µ |

## OPTIONAL ACCESSORIES (NOT INCLUDED)

| Main canister 100µ for single filter | Main canister 200µ for single filter | Protective cover | Trolley |
|---|---|---|---|
| R0897500 | R0897700 | R0568100 | R0639500 |

## FOR WHICH TYPE OF POOLS?

| | |
|---|---|
| Types of pools | Private in-ground pools,Above ground pools,With rigid walls |
| Maximum pool dimensions | 10 x 5 m |
| Pool shape | Oval,Rectangular,Free shape |
| Pool floor | Flat,Gentle Slope,Composite slope,Diamond shape |
| Pool surface | Liner,Painted concrete,Polyester hull,Reinforced PVC,Tiles |

## DESCRIPTION

| | |
|---|---|
| App Control | No |
| Cleaning areas | Floor / walls / waterline |
| Cleaning Cycles Numbers | 2 cycles |
| Cleaning Cycles | Floor only: 1h30 - Floor / walls / waterline: 2h30 |
| Timer | No |
| Power Supply - Connection | Autonomous, connected to 230V mains supply before the transformer |
| Cleaning steering | Pre-programmed |
| Drive system | Tracks |
| Drive system motors | 2 motors |
| Cleaning transmission | Gear transmission |
| Pressure sensor | No |
| Cleaning brushes | Yes |
| Type of brushes | Front brush |
| Lift system | No |
| Transparent window | Yes |
| Full filter indicator | No |
| Remote control | No |
| Cleaning safety | Deck system,Out of water safety,Diagnostic,Electronic motor protector |
| Filtration system | Rigid Filter canister |
| Filtration access | Top access |
| Water temperature | No |
| Units/pallet | 20 |

## TECHNICAL SPECIFICATIONS

| | |
|---|---|
| Power supply | 220-240 VAC / 50-60 Hz |
| Number of motors | 3 |
| Operating Power | 150 W |
| Cable length and hose length | 15 m |
| Filtering surface | 1066 $cm^2$ |
| Filtration Level | 150/60µ |
| Filtering capacity | 4 L |
| Inlet suction size | 23 cm |
| Product Dimensions | 43 x 40 x 30 cm |
| Packaging Dimensions | 56 x 56 x 37 cm |
| Product Weight | 8 kg |
| Packaged Weight | 14 kg |

ROBOTIC POOL CLEANERS

# RE 4400 iQ - VOYAGER™

Exceptional agility

**+ Optimal cleaning performance: Patented cyclonic suction / Helix shaped brushes / Progressive dual stage filtration 150/60µ**

**+ Integrated agility: Designed to work in all pool shapes or surfaces / tracks / accelerometer & gyroscope sensors**

**+ Control via iAquaLink® app: Basic features**

**+ Ease of use: Top access filter / transparent window**

3 YEAR WARRANTY

CYCLONIC SUCTION

iAquaLink CONTROL

DUAL FILTRATION

## REFERENCE

| | |
|---|---|
| **Sku Reference** | WR000327 |

## ACCESSORIES INCLUDED IN THE PACK

| | | | |
|---|---|---|---|
| Control box | Dual Filter canister 60µ and 150µ | Control box base | Free app |

## OPTIONAL ACCESSORIES (NOT INCLUDED)

| Main canister 100µ for single filter | Main canister 200µ for single filter | Protective cover | Trolley |
|---|---|---|---|
| R0897500 | R0897700 | R0568100 | R0639500 |

## FOR WHICH TYPE OF POOLS?

| | |
|---|---|
| Types of pools | Private in-ground pools,Above ground pools,With rigid walls |
| Maximum pool dimensions | 12 x 6 m |
| Pool shape | Oval,Rectangular,Free shape |
| Pool floor | Flat,Gentle Slope,Composite slope,Diamond shape |
| Pool surface | Liner,Painted concrete,Polyester hull,Reinforced PVC,Tiles |

## DESCRIPTION

| | |
|---|---|
| App Control | Yes |
| App Control Type | iAquaLink |
| Cleaning areas | Floor / walls / waterline |
| Cleaning Cycles Numbers | 2 cycles |
| Cleaning Cycles | Floor only: 1h30 - Floor / walls / waterline: 2h30 |
| Timer | No |
| Power Supply - Connection | Autonomous, connected to 230V mains supply before the transformer |
| Cleaning steering | Pre-programmed |
| Drive system | Tracks |
| Drive system motors | 2 motors |
| Cleaning transmission | Gear transmission |
| Pressure sensor | No |
| Cleaning brushes | Yes |
| Type of brushes | Front and rear brushes |
| Lift system | No |
| Transparent window | Yes |
| Full filter indicator | No |
| Remote control | No |
| Cleaning safety | Deck system,Out of water safety,Diagnostic,Electronic motor protector |
| Filtration system | Rigid Filter canister |
| Filtration access | Top access |
| Water temperature | No |
| Units/pallet | 20 |

## TECHNICAL SPECIFICATIONS

| | |
|---|---|
| Power supply | 220-240 VAC / 50-60 Hz |
| Number of motors | 3 |
| Operating Power | 150 W |
| Cable length and hose length | 18 m |
| Filtering surface | 1066 $cm^2$ |
| Filtration Level | 150/60µ |
| Filtering capacity | 4 L |
| Inlet suction size | 23 cm |
| Product Dimensions | 43 x 40 x 30 cm |
| Packaging Dimensions | 56 x 56 x 37 cm |
| Product Weight | 8 kg |
| Packaged Weight | 15 kg |

ZODIAC®

ROBOTIC POOL CLEANERS

# RE 4600 iQ - VOYAGER™

Exceptional agility

+ Optimal cleaning performance: Patented cyclonic suction / Helix shaped brushes / Progressive dual stage filtration 150/60µ
+ Integrated agility: Designed to work in all pool shapes or surfaces / tracks / accelerometer & gyroscope sensors
+ Control via iAquaLink® app: Advanced features
+ Ease of use: Top access filter / transparent window / trolley

3 YEAR WARRANTY

CYCLONIC SUCTION

iAquaLink CONTROL

LIFT SYSTEM

DUAL FILTRATION

## REFERENCE

| | |
|---|---|
| **Sku Reference** | WR000323 |

## ACCESSORIES INCLUDED IN THE PACK

| | | | |
|---|---|---|---|
| Trolley | Control box | Dual Filtration 60µ / 150µ | Free app |

## OPTIONAL ACCESSORIES (NOT INCLUDED)

| Main canister 100µ for single filter | Main canister 200µ for single filter | Protective cover |
|---|---|---|
| R0897500 | R0897700 | R0568100 |

## FOR WHICH TYPE OF POOLS?

| | |
|---|---|
| Types of pools | Private in-ground pools,Above ground pools,With rigid walls |
| Maximum pool dimensions | 12 x 6 m |
| Pool shape | Oval,Rectangular,Free shape |
| Pool floor | Flat,Gentle Slope,Composite slope,Diamond shape |
| Pool surface | Liner,Painted concrete,Polyester hull,Reinforced PVC,Tiles |

## DESCRIPTION

| | |
|---|---|
| App Control | Yes |
| App Control Type | iAquaLink |
| Cleaning areas | Floor / walls / waterline |
| Cleaning Cycles Numbers | 2 cycles |
| Cleaning Cycles | Floor only: 1h30 - Floor / walls / waterline: 2h30 |
| Timer | No |
| Power Supply - Connection | Autonomous, connected to 230V mains supply before the transformer |
| Cleaning steering | Pre-programmed |
| Drive system | Tracks |
| Drive system motors | 2 motors |
| Cleaning transmission | Gear transmission |
| Pressure sensor | No |
| Cleaning brushes | Yes |
| Type of brushes | Front and rear brushes |
| Lift system | Yes |
| Transparent window | Yes |
| Full filter indicator | No |
| Remote control | Yes, Remote control mode with app |
| Cleaning safety | Deck system,Out of water safety,Diagnostic,Electronic motor protector |
| Filtration system | Rigid Filter canister |
| Filtration access | Top access |
| Water temperature | No |
| Units/pallet | 16 |

## TECHNICAL SPECIFICATIONS

| | |
|---|---|
| Power supply | 220-240 VAC / 50-60 Hz |
| Number of motors | 3 |
| Operating Power | 150 W |
| Cable length and hose length | 18 m |
| Filtering surface | 1066 $cm^2$ |
| Filtration Level | 150/60µ |
| Filtering capacity | 4 L |
| Inlet suction size | 23 cm |
| Product Dimensions | 43 x 40 x 30 cm |
| Packaging Dimensions | 56 x 56 x 47 cm |
| Product Weight | 8 kg |
| Packaged Weight | 15 kg |

ROBOTIC POOL CLEANERS

# RE 4700 iQ - VOYAGER™

Exceptional agility

+ Optimal cleaning performance: Patented cyclonic suction / helix shaped brushes / progressive dual stage filtration 150/60µ / swivel
+ Integrated agility: Designed to work in all pool shapes or surfaces / tracks / accelerometer & gyroscope sensors
+ Control via iAquaLink® app: Advanced features
+ Ease of use: Top access filter / transparent window / trolley

3 YEAR WARRANTY · CYCLONIC SUCTION · iAquaLink CONTROL · LIFT SYSTEM · DUAL FILTRATION · SWIVEL

## REFERENCE

| | |
|---|---|
| **Sku Reference** | WR000499 |

## ACCESSORIES INCLUDED IN THE PACK

| | | | | |
|---|---|---|---|---|
| Trolley | Swivel | Control box | Dual Filter canister 60µ / 150µ | Free app |

## OPTIONAL ACCESSORIES (NOT INCLUDED)

| Main canister 100µ for single filter | Main canister 200µ for single filter | Protective cover |
|---|---|---|
| R0897500 | R0897700 | R0568100 |

## FOR WHICH TYPE OF POOLS?

| | |
|---|---|
| Types of pools | Private in-ground pools,Above ground pools,With rigid walls |
| Maximum pool dimensions | 12 x 6 m |
| Pool shape | Oval,Rectangular,Free shape |
| Pool floor | Flat,Gentle Slope,Composite slope,Diamond shape |
| Pool surface | Liner,Painted concrete,Polyester hull,Reinforced PVC,Tiles |

## DESCRIPTION

| | |
|---|---|
| App Control | Yes |
| App Control Type | iAquaLink |
| Cleaning areas | Floor / walls / waterline |
| Cleaning Cycles Numbers | 2 cycles |
| Cleaning Cycles | Floor only: 1h30 - Floor / walls / waterline: 2h30 |
| Timer | No |
| Power Supply - Connection | Autonomous, connected to 230V mains supply before the transformer |
| Cleaning steering | Pre-programmed |
| Drive system | Tracks |
| Drive system motors | 2 motors |
| Cleaning transmission | Gear transmission |
| Pressure sensor | No |
| Cleaning brushes | Yes |
| Type of brushes | Front and rear brushes |
| Lift system | Yes |
| Transparent window | Yes |
| Full filter indicator | No |
| Remote control | Yes, Remote control mode with app |
| Cleaning safety | Deck system,Out of water safety,Diagnostic,Electronic motor protector |
| Filtration system | Rigid Filter canister |
| Filtration access | Top access |
| Water temperature | No |
| Units/pallet | 16 |

## TECHNICAL SPECIFICATIONS

| | |
|---|---|
| Power supply | 220-240 VAC / 50-60 Hz |
| Number of motors | 3 |
| Operating Power | 150 W |
| Cable length and hose length | 18 m with Swivel |
| Filtering surface | 1066 $cm^2$ |
| Filtration Level | 150/60µ |
| Filtering capacity | 4 L |
| Inlet suction size | 23 cm |
| Product Dimensions | 43 x 40 x 30 cm |
| Packaging Dimensions | 56 x 56 x 47 cm |
| Product Weight | 8 kg |
| Packaged Weight | 15 kg |

ZODIAC®

# ALPHA IQ™

## Ultra-efficiency combined with intelligence

RA 6700 iQ model

**SensorNavSystem™**

- Smart cycle: calculates the optimal cleaning time for each pool
- Pressure sensor: provides superior wall climbing and waterline cleaning
- Water Temperature Sensor

**iAquaLink® CONTROL**

Wi-Fi Control through iAqualink® App

- Remote control mode
- 7 days timer
- Lift System
- Choose start, stop and monitor the cycles
- Smart cleaning mode
- Display of water temperature

**4 YEARS WARRANTY**

3 years + 1 additional year if the robot is paired with the iAqualink® application*

*See conditions in the warranty guide

# ALPHA iQ™ PRO

## Ultra-efficiency combined with intelligence

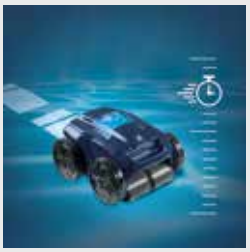

Personalised cleaning Sensor Nav Sytem™

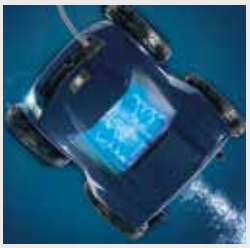

Patented Cyclone suction

Lift System: Easy-to-use and lighter removal from the water

Intuitive Wi-Fi connected control

## COMPARATIVE TABLE OF RANGES

TECHNICAL SPECIFICATIONS

| | | RA 6300 iQ | RA 6500 iQ | RA 6700 iQ | RA 6800 iQ |
|---|---|---|---|---|---|
| | | | | | |
| Types of pools | Surfaces | Tiles, liner, polyester hull, reinforced PVC, painted concrete | Tiles, liner, polyester hull, reinforced PVC, painted concrete | Tiles, liner, polyester hull, reinforced PVC, painted concrete | Tiles, liner, polyester hull, reinforced PVC, painted concrete |
| | Shapes | Rectangular, oval, free shape | Rectangular, oval, free shape | Rectangular, oval, free shape | Rectangular, oval, free shape |
| | Size | 12 x 6 m (18m with Swivel cable) | 12 x 6 m (18m with Swivel cable) | 15 x 7 m (21m with Swivel cable) | 15 x 7 m (21m with Swivel cable) |
| Performance | Traction | 4 wheel drive - 2 motors | 4 wheel drive - 2 motors | 4 wheel drive - 2 motors | 4 wheel drive - 2 motors |
| | Cleaning areas | Floor / walls / waterline | Floor / walls / waterline | Floor / walls / waterline | Floor / walls / waterline |
| | Cyclonic Suction | ✓ | ✓ | ✓ | ✓ |
| | Filtering level | 60µ | 60µ | 60µ | 150 and 60µ |
| | Filter capacity | 5 L | 5 L | 5 L | 5 L |
| | Swivel | ✓ | ✓ | ✓ | ✓ |
| | Sensor Nav System™ | ✓ | ✓ | ✓ | ✓ |
| | Remote control | - | ✓ (with app) | ✓ (with app) | ✓ (with app) |
| | Pressure Sensor | - | ✓ | ✓ | ✓ |
| | Type of brush | Contact + | Contact + | Contact + | Contact + |
| Cycles | Number of cycles | 2 | Multiple | Multiple | Multiple |
| | Cleaning cycles | Quick floor only<br>Smart floor/ walls / waterline (calculated time) | Quick floor only<br>Smart floor/ walls / waterline (calculated time)<br>Ultra floor / walls / waterline | Quick floor only<br>Smart floor/ walls / waterline (calculated time)<br>Ultra floor / walls / waterline<br>Waterline only | Quick floor only<br>Smart floor/ walls / waterline (calculated time)<br>Ultra floor / walls / waterline<br>Waterline only |
| | Manual cleaning time adjustment | - | ✓ | ✓ | ✓ |
| Ease of use | iAqualink® app control | ✓ | ✓ | ✓ | ✓ |
| | Lift System | ✓ | ✓ | ✓ | ✓ |
| | 7-day timer | - | ✓ | ✓ | ✓ |
| | Full filter indicator | ✓ | ✓ | ✓ | ✓ |
| | Transparent window | ✓ | ✓ | ✓ | ✓ |
| | Illuminated filter | ✓ | ✓ | ✓ | ✓ |
| | Type of filter | Rigid Filter canister / Top access | Rigid Filter canister / Top access | Rigid Filter canister / Top access | Rigid Filter canister / Top access |
| | Trolley | ✓ | ✓ | ✓ | ✓ |
| Advanced app features | Water temperature display | - | - | ✓ (info in app) | ✓ (info in app) |
| | Spot cleaning mode | - | - | ✓ | ✓ |
| | Warranty | 4 years* | 4 years* | 4 years* | 4 years* |

* 3 years + 1 year if the cleaner is paired to iAqualink® app.

## COMPARATIVE TABLE OF RANGES

TECHNICAL SPECIFICATIONS

| | | RA 6900 iQ | Alpha 63 iQ Bio |
|---|---|---|---|
| | | | |
| Types of pools | Surfaces | Tiles, liner, polyester hull, reinforced PVC, painted concrete | Tiles, liner, polyester hull, reinforced PVC, painted concrete |
| | Shapes | Rectangular, oval, free shape | Rectangular, oval, free shape |
| | Size | 20 x 10 m<br>(25m with Swivel cable) | Natural and biological swimming pools, maximum 12 x 6 m<br>(18m with Swivel cable) |
| Performance | Traction | 4 wheel drive - 2 motors | 4 wheel drive - 2 motors |
| | Cleaning areas | Floor / walls / waterline | Floor / walls / waterline |
| | Cyclonic Suction | ✓ | ✓ |
| | Filtering level | 150 and 60µ | 400µ |
| | Filter capacity | 5 L | 5 L |
| | Swivel | ✓ | ✓ |
| | Sensor Nav System™ | ✓ | ✓ |
| | Remote control | **✓ (with app)** | - |
| | Pressure Sensor | ✓ | - |
| | Type of brush | Contact + | Contact + |
| Cycles | Number of cycles | Multiple | 2 |
| | Cleaning cycles | Multiple from 0h30 to 6h with preset cycles<br>Quick floor only<br>Smart floor/ walls / waterline (calculated time)<br>Ultra floor / walls / waterline<br>Waterline only | Quick floor only<br>Smart floor/ walls / waterline (calculated time) |
| | Manual cleaning time adjustment | ✓ | - |
| Ease of use | iAqualink® app control | ✓ | ✓ |
| | Lift System | ✓ | ✓ |
| | 7-day timer | ✓ | - |
| | Full filter indicator | ✓ | ✓ |
| | Transparent window | ✓ | ✓ |
| | Illuminated filter | ✓ | ✓ |
| | Type of filter | Rigid Filter canister / Top access | Rigid Filter canister / Top access |
| | Trolley | ✓ | ✓ |
| Advanced app features | Water temperature display | **✓ (info in app)** | - |
| | Spot cleaning mode | ✓ | - |
| | Warranty | 4 years* | 4 years* |

* 3 years + 1 year if the cleaner is paired to iAqualink® app.

ROBOTIC POOL CLEANERS

# RA 6300 iQ - ALPHA iQ™

Ultra-Efficiency Combined With Intelligence

+ Sensor Nav Sytem™: intelligent and personalised cleaning
+ Ultra-powerful & long lasting suction
+ Effortless removal from water
+ Wi-fi connected: intuitive interface and advanced functionalities in app from everywhere

4 YEAR WARRANTY

CYCLONIC SUCTION

Sensor Nav System™

iAquaLink™ CONTROL

LIFT SYSTEM

## REFERENCE

| | |
|---|---|
| **Sku Reference** | WR000199 |

## ACCESSORIES INCLUDED IN THE PACK

| | | | | | |
|---|---|---|---|---|---|
| Trolley | Control box | Ultra-Fine Filter canister 60µ | Swivel | Contact + Brushes | Free app |

## OPTIONAL ACCESSORIES (NOT INCLUDED)

| Ultra-fine filter canister 60µ | Fine filter canister 100µ | Large debris filter canister 200µ | Protective cover |
|---|---|---|---|
| R0863500 | R0863600 | R0863700 | R0568100 |

## FOR WHICH TYPE OF POOLS?

| | |
|---|---|
| Types of pools | Private in-ground pools,Above ground pools,With rigid walls |
| Maximum pool dimensions | 12 x 6 m |
| Pool shape | Oval,Rectangular,Free shape |
| Pool floor | Composite slope,Diamond shape,Flat,Gentle Slope |
| Pool surface | Liner,Painted concrete,Polyester hull,Reinforced PVC,Tiles |

## DESCRIPTION

| | |
|---|---|
| App Control | Yes |
| App Control Type | iAquaLink |
| Cleaning areas | Floor / walls / waterline |
| Cleaning Cycles Numbers | 2 cycles |
| Cleaning Cycles | Quick: floor only 1h15 - Smart: floor/ walls / waterline (calculated time) |
| Timer | No |
| Power Supply - Connection | Autonomous, connected to 230V mains supply before the transformer |
| Cleaning steering | Pre-programmed |
| Drive system | 4 wheel drive |
| Drive system motors | 2 motors |
| Cleaning transmission | Gear transmission |
| Pressure sensor | No |
| Cleaning brushes | Yes |
| Type of brushes | Contact + Brushes |
| Lift system | Yes |
| Transparent window | Yes |
| Full filter indicator | Yes |
| Remote control | No |
| Cleaning safety | Deck system,Out of water safety,Diagnostic,Electronic motor protector |
| Filtration system | Rigid Filter canister |
| Filtration access | Top access |
| Water temperature | No |
| Units/pallet | 16 |

## TECHNICAL SPECIFICATIONS

| | |
|---|---|
| Power supply | 220-240 VAC / 50-60 Hz |
| Number of motors | 3 |
| Operating Power | 150 W |
| Cable length and hose length | 18 m with Swivel |
| Filtering surface | 1180 $cm^2$ |
| Filtration Level | 60µ |
| Filtering capacity | 5 L |
| Inlet suction size | 24,5 cm |
| Product Dimensions | 43 x 48 x 27 cm |
| Packaging Dimensions | 56 x 56 x 46 cm |
| Product Weight | 10 kg |
| Packaged Weight | 19.7 kg |

* 3 years + 1 year if the cleaner is paired to iAqualink® app.

ZODIAC®

ROBOTIC POOL CLEANERS

# RA 6500 iQ - ALPHA iQ™

Ultra-Efficiency Combined With Intelligence

+ Sensor Nav Sytem™: intelligent and personalised cleaning
+ Effortless removal from water
+ Ultra-powerful & long lasting suction
+ Wi-fi connected: intuitive interface and advanced functionalities in app from everywhere

4 YEAR WARRANTY · CYCLONIC SUCTION · Sensor Nav System™ · iAquaLink™ CONTROL · LIFT SYSTEM

## REFERENCE

| | |
|---|---|
| **Sku Reference** | WR000198 |

## ACCESSORIES INCLUDED IN THE PACK

| | | | | | |
|---|---|---|---|---|---|
| Trolley | Control box | Ultra-Fine Filter canister 60µ | Swivel | Contact + Brushes | Free app |

## OPTIONAL ACCESSORIES (NOT INCLUDED)

| Ultra-fine filter canister 60µ | Fine filter canister 100µ | Large debris filter canister 200µ | Protective cover |
|---|---|---|---|
| R0863500 | R0863600 | R0863700 | R0568100 |

## FOR WHICH TYPE OF POOLS?

| | |
|---|---|
| Types of pools | Private in-ground pools,Above ground pools,With rigid walls |
| Maximum pool dimensions | 12 x 6 m |
| Pool shape | Oval,Rectangular,Free shape |
| Pool floor | Composite slope,Diamond shape,Flat,Gentle Slope |
| Pool surface | Liner,Painted concrete,Polyester hull,Reinforced PVC,Tiles |

## DESCRIPTION

| | |
|---|---|
| App Control | Yes |
| App Control Type | iAquaLink |
| Cleaning areas | Floor / walls / waterline |
| Cleaning Cycles Numbers | Multiple from 0h30 to 3h30 with preset cycles |
| Cleaning Cycles | Quick: floor only 1h15 - Smart: floor / walls / waterline (calculated time) - Ultra: floor / walls / waterline (2h45) |
| Timer | 7-days via the App |
| Power Supply - Connection | Autonomous, connected to 230V mains supply before the transformer |
| Cleaning steering | Pre-programmed |
| Drive system | 4 wheel drive |
| Drive system motors | 2 motors |
| Cleaning transmission | Gear transmission |
| Pressure sensor | Yes |
| Cleaning brushes | Yes |
| Type of brushes | Contact + Brushes |
| Lift system | Yes |
| Transparent window | Yes |
| Full filter indicator | Yes |
| Remote control | Yes, Remote control mode with app |
| Cleaning safety | Deck system,Out of water safety,Diagnostic,Electronic motor protector |
| Filtration system | Rigid Filter canister |
| Filtration access | Top access |
| Water temperature | No |
| Units/pallet | 16 |

## TECHNICAL SPECIFICATIONS

| | |
|---|---|
| Power supply | 220-240 VAC / 50-60 Hz |
| Number of motors | 3 |
| Operating Power | 150 W |
| Cable length and hose length | 18 m with Swivel |
| Filtering surface | 1180 $cm^2$ |
| Filtration Level | 60µ |
| Filtering capacity | 5 L |
| Inlet suction size | 24,5 cm |
| Product Dimensions | 43 x 48 x 27 cm |
| Packaging Dimensions | 56 x 56 x 46 cm |
| Product Weight | 10 kg |
| Packaged Weight | 19.9 kg |

* 3 years + 1 year if the cleaner is paired to iAqualink® app.

ROBOTIC POOL CLEANERS

# RA 6700 iQ - ALPHA iQ™

Ultra-Efficiency Combined With Intelligence

+ Sensor Nav Sytem™: intelligent and personalised cleaning
+ Ultra-powerful & long lasting suction
+ Effortless removal from water
+ Wi-fi connected: intuitive interface and advanced functionalities in app from everywhere

4 YEAR WARRANTY · CYCLONIC SUCTION · Sensor Nav System™ · iAquaLink™ CONTROL · LIFT SYSTEM

## REFERENCE

| | |
|---|---|
| **Sku Reference** | WR000197 |

## ACCESSORIES INCLUDED IN THE PACK

| | | | | 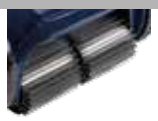 | |
|---|---|---|---|---|---|
| Trolley | Control box | Ultra-Fine Filter canister 60µ | Swivel | Contact + Brushes | Free app |

## OPTIONAL ACCESSORIES (NOT INCLUDED)

| Ultra-fine filter canister 60µ | Fine filter canister 100µ | Large debris filter canister 200µ | Protective cover |
|---|---|---|---|
| R0863500 | R0863600 | R0863700 | R0568100 |

## FOR WHICH TYPE OF POOLS?

| | |
|---|---|
| Types of pools | Private in-ground pools,Above ground pools,With rigid walls |
| Maximum pool dimensions | 15 x 7 m |
| Pool shape | Oval,Rectangular,Free shape |
| Pool floor | Composite slope,Diamond shape,Flat,Gentle Slope |
| Pool surface | Liner,Painted concrete,Polyester hull,Reinforced PVC,Tiles |

## DESCRIPTION

| | |
|---|---|
| App Control | Yes |
| App Control Type | iAquaLink |
| Cleaning areas | Floor / walls / waterline |
| Cleaning Cycles Numbers | Multiple from 0h30 to 3h30 with preset cycles |
| Cleaning Cycles | Quick: floor only 1h15 - Smart: floor / walls / waterline (calculated time) - Ultra: floor / walls / waterline (2h45) - Waterline only: 0h45 |
| Timer | 7-days |
| Power Supply - Connection | Autonomous, connected to 230V mains supply before the transformer |
| Cleaning steering | Pre-programmed |
| Drive system | 4 wheel drive |
| Drive system motors | 2 motors |
| Cleaning transmission | Gear transmission |
| Pressure sensor | Yes |
| Cleaning brushes | Yes |
| Type of brushes | Contact + Brushes |
| Lift system | Yes |
| Transparent window | Yes |
| Full filter indicator | Yes |
| Remote control | Yes, Remote control mode with app |
| Cleaning safety | Deck system,Out of water safety,Diagnostic,Electronic motor protector |
| Filtration system | Rigid Filter canister |
| Filtration access | Top access |
| Water temperature | Yes, information in the App |
| Units/pallet | 16 |

## TECHNICAL SPECIFICATIONS

| | |
|---|---|
| Power supply | 220-240 VAC / 50-60 Hz |
| Number of motors | 3 |
| Operating Power | 150 W |
| Cable length and hose length | 21 m with Swivel |
| Filtering surface | 1180 $cm^2$ |
| Filtration Level | 60µ |
| Filtering capacity | 5 L |
| Inlet suction size | 24,5 cm |
| Product Dimensions | 43 x 48 x 27 cm |
| Packaging Dimensions | 56 x 56 x 46 cm |
| Product Weight | 10 kg |
| Packaged Weight | 20.2 kg |

* 3 years + 1 year if the cleaner is paired to iAqualink® app.

ZODIAC®

ROBOTIC POOL CLEANERS

# RA 6800 iQ - ALPHA iQ™

Ultra-Efficiency Combined With Intelligence

+ Sensor Nav Sytem™: intelligent and personalised cleaning
+ Ultra-powerful & long lasting suction
+ Dual-Stage filtration
+ Effortless removal from water
+ Wi-fi connected: intuitive interface and advanced functionalities in app from everywhere

4 YEAR WARRANTY · CYCLONIC SUCTION · Sensor Nav System™ · iAquaLink™ CONTROL · LIFT SYSTEM · DUAL FILTRATION

## REFERENCE

| | |
|---|---|
| **Sku Reference** | WR000295 |

## ACCESSORIES INCLUDED IN THE PACK

| | | | | | |
|---|---|---|---|---|---|
| Trolley | Control box | Dual-Stage filter 150 + 60µ (with possibility to use 150µ alone) | Swivel | Contact + Brushes | Free app |

## OPTIONAL ACCESSORIES (NOT INCLUDED)

| Coarse filter 150µ for stand alone or Dual-Stage use | Ultra-fine filter 60µ for Dual-Stage use | Fine filter canister 100µ | Large debris filter canister 200µ | Ultra-fine filter canister 60µ | Protective cover |
|---|---|---|---|---|---|
| R0913300 | R0913400 | R0863600 | R0863700 | R0863500 | R0568100 |

## FOR WHICH TYPE OF POOLS?

| | |
|---|---|
| Types of pools | Private in-ground pools,Above ground pools,With rigid walls |
| Maximum pool dimensions | 15 x 7 m |
| Pool shape | Oval,Rectangular,Free shape |
| Pool floor | Composite slope,Diamond shape,Flat,Gentle Slope |
| Pool surface | Liner,Painted concrete,Polyester hull,Reinforced PVC,Tiles |

## DESCRIPTION

| | |
|---|---|
| App Control | Yes |
| App Control Type | iAquaLink |
| Cleaning areas | Floor / walls / waterline |
| Cleaning Cycles Numbers | Multiple from 0h30 to 3h30 with preset cycles |
| Cleaning Cycles | Quick: floor only 1h15 - Smart: floor / walls / waterline (calculated time) - Ultra: floor / walls / waterline (2h45) - Waterline only: 0h45 |
| Timer | 7-days |
| Power Supply - Connection | Autonomous, connected to 230V mains supply before the transformer |
| Cleaning steering | Pre-programmed |
| Drive system | 4 wheel drive |
| Drive system motors | 2 motors |
| Cleaning transmission | Gear transmission |
| Pressure sensor | Yes |
| Cleaning brushes | Yes |
| Type of brushes | Contact + Brushes |
| Lift system | Yes |
| Transparent window | Yes |
| Full filter indicator | Yes |
| Remote control | Yes, Remote control mode with app |
| Cleaning safety | Deck system,Out of water safety,Diagnostic,Electronic motor protector |
| Filtration system | Rigid Filter canister |
| Filtration access | Top access |
| Water temperature | Yes, information in the App |
| Units/pallet | 16 |

## TECHNICAL SPECIFICATIONS

| | |
|---|---|
| Power supply | 220-240 VAC / 50-60 Hz |
| Number of motors | 3 |
| Operating Power | 150 W |
| Cable length and hose length | 21 m with Swivel |
| Filtering surface | 1827 $cm^2$ |
| Filtration Level | 150/60µ |
| Filtering capacity | 5 L |
| Inlet suction size | 24,5 cm |
| Product Dimensions | 43 x 48 x 27 cm |
| Packaging Dimensions | 56 x 56 x 46 cm |
| Product Weight | 10 kg |
| Packaged Weight | 20.5 kg |

* 3 years + 1 year if the cleaner is paired to iAqualink® app.

ROBOTIC POOL CLEANERS

# RA 6900 iQ - ALPHA iQ™

Ultra-Efficiency Combined With Intelligence

+ Sensor Nav Sytem™: intelligent and personalised cleaning
+ Ultra-powerful & long lasting suction
+ Dual-Stage filtration
+ Effortless removal from water
+ Wi-fi connected: intuitive interface and advanced functionalities in app from everywhere

4 YEAR WARRANTY · CYCLONIC SUCTION · Sensor Nav System™ · iAquaLink™ CONTROL · LIFT SYSTEM · DUAL FILTRATION

## REFERENCE

| | |
|---|---|
| **Sku Reference** | WR000296 |

## ACCESSORIES INCLUDED IN THE PACK

| | | | | 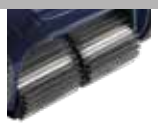 | |
|---|---|---|---|---|---|
| Trolley | Control box | Dual-Stage filter 150 + 60µ (with possibility to use 150µ alone) | Swivel | Contact + Brushes | Free app |

## OPTIONAL ACCESSORIES (NOT INCLUDED)

| Coarse filter 150µ for stand alone or Dual-Stage use | Ultra-fine filter 60µ for Dual-Stage use | Fine filter canister 100µ | Large debris filter canister 200µ | Ultra-fine filter canister 60µ | Protective cover |
|---|---|---|---|---|---|
| R0913300 | R0913400 | R0863600 | R0863700 | R0863500 | R0568100 |

## FOR WHICH TYPE OF POOLS?

| | |
|---|---|
| Types of pools | Private in-ground pools,Above ground pools,With rigid walls |
| Maximum pool dimensions | 20 x 10 m |
| Pool shape | Oval,Rectangular,Free shape |
| Pool floor | Composite slope,Diamond shape,Flat,Gentle Slope |
| Pool surface | Liner,Painted concrete,Polyester hull,Reinforced PVC,Tiles |

## DESCRIPTION

| | |
|---|---|
| App Control | Yes |
| App Control Type | iAquaLink |
| Cleaning areas | Floor / walls / waterline |
| Cleaning Cycles Numbers | Multiple from 0h30 to 3h30 with preset cycles |
| Cleaning Cycles | Quick: floor only 1h15 - Smart: floor / walls / waterline (calculated time) - Ultra: floor / walls / waterline (2h45) - Waterline only: 0h45 |
| Timer | 7-days |
| Power Supply - Connection | Autonomous, connected to 230V mains supply before the transformer |
| Cleaning steering | Pre-programmed |
| Drive system | 4 wheel drive |
| Drive system motors | 2 motors |
| Cleaning transmission | Gear transmission |
| Pressure sensor | Yes |
| Cleaning brushes | Yes |
| Type of brushes | Contact + Brushes |
| Lift system | Yes |
| Transparent window | Yes |
| Full filter indicator | Yes |
| Remote control | Yes, Remote control mode with app |
| Cleaning safety | Deck system,Out of water safety,Diagnostic,Electronic motor protector |
| Filtration system | Rigid Filter canister |
| Filtration access | Top access |
| Water temperature | Yes, information in the App |
| Units/pallet | 16 |

## TECHNICAL SPECIFICATIONS

| | |
|---|---|
| Power supply | 220-240 VAC / 50-60 Hz |
| Number of motors | 3 |
| Operating Power | 150 W |
| Cable length and hose length | 25 m with Swivel |
| Filtering surface | 1827 $cm^2$ |
| Filtration Level | 150/60µ |
| Filtering capacity | 5 L |
| Inlet suction size | 24,5 cm |
| Product Dimensions | 43 x 48 x 27 cm |
| Packaging Dimensions | 56 x 56 x 46 cm |
| Product Weight | 10 kg |
| Packaged Weight | 20.9 kg |

* 3 years + 1 year if the cleaner is paired to iAqualink® app.

ZODIAC®

ROBOTIC POOL CLEANERS

# Alpha 63 iQ Bio - ALPHA iQ™

Ultra-Efficiency Combined With Intelligence For Natural And Biological Swimming Pools.

+ Sensor Nav Sytem™: intelligent and personalised cleaning
+ Ultra-powerful & long lasting suction
+ Effortless removal from water
+ Wi-fi connected: intuitive interface and advanced functionalities in app from everywhere

4 YEAR WARRANTY · CYCLONIC SUCTION · Sensor Nav System™ · iAquaLink CONTROL · LIFT SYSTEM · BIO POOL

## REFERENCE

| | |
|---|---|
| **Sku Reference** | WR000277 |

## ACCESSORIES INCLUDED IN THE PACK

| Trolley | Control box | Filter canister 400µ | Swivel | Contact + Brushes | Free app |
|---|---|---|---|---|---|

## OPTIONAL ACCESSORIES (NOT INCLUDED)

| Ultra-fine filter canister 60µ | Fine filter canister 100µ | Large debris filter canister 200µ | Protective cover |
|---|---|---|---|
| R0863500 | R0863600 | R0863700 | R0568100 |

## FOR WHICH TYPE OF POOLS?

| | |
|---|---|
| Types of pools | Natural and biological swimming pools |
| Maximum pool dimensions | 12 x 6 m |
| Pool shape | Oval,Rectangular,Free shape |
| Pool floor | Composite slope,Diamond shape,Flat,Gentle Slope |
| Pool surface | Liner,Painted concrete,Polyester hull,Reinforced PVC,Tiles |

## DESCRIPTION

| | |
|---|---|
| App Control | Yes |
| App Control Type | iAquaLink |
| Cleaning areas | Floor / walls / waterline |
| Cleaning Cycles Numbers | 2 cycles |
| Cleaning Cycles | Quick: floor only 1h15 - Smart: floor/ walls / waterline (calculated time) |
| Timer | No |
| Power Supply - Connection | Autonomous, connected to 230V mains supply before the transformer |
| Cleaning steering | Pre-programmed |
| Drive system | 4 wheel drive |
| Drive system motors | 2 motors |
| Cleaning transmission | Gear transmission |
| Pressure sensor | No |
| Cleaning brushes | Yes |
| Type of brushes | Contact + Brushes |
| Lift system | Yes |
| Transparent window | Yes |
| Full filter indicator | Yes |
| Remote control | No |
| Cleaning safety | Deck system,Out of water safety,Diagnostic,Electronic motor protector |
| Filtration system | Rigid Filter canister |
| Filtration access | Top access |
| Water temperature | No |
| Units/pallet | 16 |

## TECHNICAL SPECIFICATIONS

| | |
|---|---|
| Power supply | 220-240 VAC / 50-60 Hz |
| Number of motors | 3 |
| Operating Power | 150 W |
| Cable length and hose length | 18 m with Swivel |
| Filtering surface | 1180 $cm^2$ |
| Filtration Level | 400µ |
| Filtering capacity | 5 L |
| Inlet suction size | 24,5 cm |
| Product Dimensions | 43 x 48 x 27 cm |
| Packaging Dimensions | 56 x 56 x 46 cm |
| Product Weight | 10 kg |
| Packaged Weight | 19.7 kg |

* 3 years + 1 year if the cleaner is paired to iAqualink® app.

# CORDLESS POOL CLEANERS

## Performance now cordless!

Free from its cable, the cordless cleaners are easy to use on a daily basis and take up little space. The long-lasting lithium-ion battery guarantees a full cleaning cycle with no compromise on performance.

For added convenience, the user interface is located on the robot and enables to check the battery status and easily start a cleaning cycle.

### > PIXEL™, SIMPLICITY WITH TOTAL FREEDOM

Free of its cable, Pixel™ is **compact, lightweight and very easy to start up** with simplified handling and storage.
The **Lithium-Ion battery** gives it more freedom of movement when cleaning the pool, and the user can see the battery charge level at a glance by checking its **LED battery indicator.**

### > FREERIDER™, PERFORMANCE WITH TOTAL FREEDOM

Free of its cable, Freerider™ is easy to use on a daily basis and can be stored on its charging station. **Its long-lasting lithium-ion battery guarantees a full cleaning cycle** (2.5 hrs) and in less than 5 hours of charge. **The iAqualink® application** enhances this sense of freedom, as users can view the battery's power level immediately and access end-of-cycle notifications or remote updates.

## > FREEDOM TO MOVE, WITH CORDLESS ROBOTS

FREEDOM TO MOVE

**"FREEDOM TO MOVE"** is the pictogram you will find whenever you see a Zodiac cordless cleaner. Their long-lasting lithium-ion battery guarantees a full cleaning cycle without compromise on performance.

# PIXEL™

## SIMPLICITY WITH TOTAL FREEDOM

Floating ring

Easy removal from water

Intuitive LED

Compact size

### CORDLESS FREEDOM

Freed from its cord, PIXEL™ is compact, lightweight and very easy to start up with simplified handing and storage.
The Lithium-Ion battery gives it more freedom of movement when cleaning the pool, and the user can see the battery charge level at a glance by checking its LED battery indicator light.

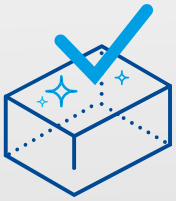

### EFFICIENT FLOOR CLEANING

It effectively cleans the floor of above-ground pools and small in-ground pools without compromise in a 90-minute cycle. Thanks to its 150-µ filter, and brush features, it quickly removes stuck-on debris before sucking it up and provides optimal cleaning of the pool floor.

### EFFORTLESS HANDLING

Its transparent window lets you instantly check the amount of debris in the filter. To make things easier for you, the filter can be accessed from the top of the robot, making it very easy to clean and helping you avoid any contact with debris.
Once the cleaning cycle has ended, the robotic cleaner stops next to a pool wall for easier removal from the water with a floating ring or a hook provided with the device.

CORDLESS POOL CLEANERS

# OP-Li 2100 - PIXEL™

+ Cordless freedom: Lithium-Ion battery / LED battery level indicator
+ Efficient cleaning: Optimal floor coverage / brushing
+ Effortless handling: Easy maintenance / Lightweight / Transparent window

2 YEAR WARRANTY

FREEDOM TO MOVE

## REFERENCE

| | |
|---|---|
| **Sku Reference** | WR000504 |

## ACCESSORIES INCLUDED IN THE PACK

| | | | |
|---|---|---|---|
| Universal Hook | Charger | Simple 150-µ filter | Floating ring |

## FOR WHICH TYPE OF POOLS?

| | |
|---|---|
| Types of pools | Private in-ground pools,Above ground pools,With rigid walls,Treated with chlorine only |
| Maximum pool dimensions | 7 x 3 m |
| Pool shape | Oval,Rectangular,Free shape |
| Pool floor | Flat,Gentle Slope <15° |
| Pool surface | Liner,Painted concrete,Polyester hull,Reinforced PVC,Tiles |

## DESCRIPTION

| | |
|---|---|
| App Control | No |
| Cleaning areas | Floor |
| Cleaning Cycles Numbers | 1 cycle |
| Cleaning Cycles | Floor: 1h30 |
| Battery runtime | 90 min |
| Charging type | Indoor charger |
| Timer | No |
| Cleaning steering | Pre-programmed |
| Drive system | Tracks |
| Drive system motors | 1 motor |
| Cleaning transmission | Gear transmission |
| Pressure sensor | No |
| Cleaning brushes | Yes |
| Type of brushes | Front brush |
| Lift system | No |
| Transparent window | Yes |
| Full filter indicator | No |
| Remote control | No |
| Cleaning safety | Deck system,Out of water safety,Diagnostic,Electronic motor protector |
| Filtration system | Rigid Filter canister |
| Filtration access | Top access |
| Water temperature | No |

## TECHNICAL SPECIFICATIONS

| | |
|---|---|
| Number of motors | 2 |
| Battery Type | Lithium-Ion |
| Battery capacity | 5 100 mAh |
| Filtering surface | 425 $cm^2$ |
| Filtration Level | 150µ |
| Filtering capacity | 2 L |
| Inlet suction size | 17 cm |
| Product Dimensions | 36 x 29 x 29 cm |
| Packaging Dimensions | x x cm |
| Product Weight | 6 kg |
| Packaged Weight | 7,7 kg |

# FREERIDER™

## PERFORMANCE WITH TOTAL FREEDOM

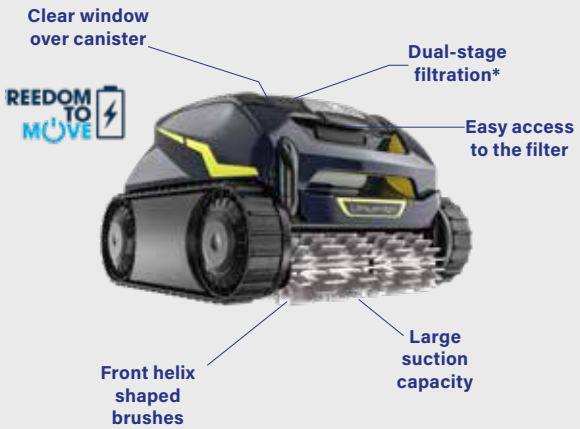


*Depending on models

Control Screen

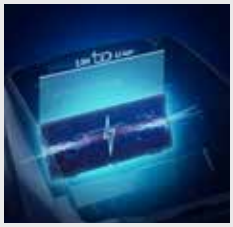
Lithium-Ion Battery

Charging Station

Intuitive user interface

| COMPARATIVE TABLE OF RANGES<br>TECHNICAL SPECIFICATIONS | | RF 5200 iQ | RF 5400 iQ | RF 5600 iQ |
|---|---|---|---|---|
| | | | | |
| Types of pools | Surfaces | Vinyle, polyester hull, reinforced PVC, painted concrete, tiles | | |
| | Shapes | Rectangular, oval, free shape | | |
| | Bottom | Flat, gentle slope, composite slope, diamond shape | | |
| | Size | 10 x 5 m | 12 x 6 m | 12 x 6 m |
| Cordless technology | Battery type | Lithium-Ion | Lithium-Ion | Lithium-Ion |
| | Running time | Up to 2h | Up to 2h30 | Up to 2h30 |
| | Charging time | <5h | <5h | <5h |
| | Type of charger | Charging base | Charging base | Charging base |
| Performance | Traction | Tracks - 2 motors | Tracks - 2 motors | Tracks - 2 motors |
| | Cleaning areas | Floor / walls / waterline | Floor / walls / waterline | Floor / walls / waterline |
| | Cyclonic Suction | ✓ | ✓ | ✓ |
| | Filtering level | 100µ | 150/60µ | 150/60µ |
| | Filter capacity | 4 L | 4 L | 4 L |
| | Sensor Nav System™ | - | - | - |
| | Remote control | - | - | ✓ |
| | Type of brush | Helix shaped | Helix shaped | Helix shaped |
| Cycles | Number of cycles | 2 | 2 + 2 with the app | 2 + 2 with the app |
| | Cleaning cycles | Floor only<br>Floor / walls / waterline | Floor only<br>Floor / walls / waterline<br>Smart (from App)<br>Waterline only (from App) | |
| | Manual cleaning time adjustment | - | - | - |
| Ease of use | iAqualink® app control | ✓ | ✓ | ✓ |
| | Lift System | - | - | ✓ |
| | 7-day timer | - | - | - |
| | Full filter indicator | - | - | - |
| | Transparent window | ✓ | ✓ | ✓ |
| | Illuminated filter | - | ✓ | ✓ |
| | Type of filter | Rigid Filter canister / Top access | Rigid Filter canister / Top access | Rigid Filter canister / Top access |
| Advanced app features | Water temperature display | - | - | - |
| | Spot cleaning mode | - | - | - |
| | Warranty | 3 years* | 3 years* | 3 years* |

CORDLESS POOL CLEANERS

# RF 5200 iQ - FREERIDER™

+ Cordless freedom: Lithium-Ion battery / Fast charging / iAquaLink® control
+ Cyclonic performance: Patented Cyclonic suction / Integrated agility / Helix brushes
+ Easy to use: Easy maintenance / Simple water retrieval

3 YEAR WARRANTY · FREEDOM TO MOVE · CYCLONIC SUCTION · iAquaLink CONTROL

## REFERENCE

| | |
|---|---|
| **Sku Reference** | WR000576 |

## ACCESSORIES INCLUDED IN THE PACK

| | | | |
|---|---|---|---|
| Universal Hook | Fine Filter canister 100µ | Free app | Charging base |

## OPTIONAL ACCESSORIES (NOT INCLUDED)

| Main canister 200µ for single filter | Main canister 150µ for dual stage filter | Over canister 60µ for dual stage filter |
|---|---|---|
| R0897700 | R0897600 | R0898100 |

## FOR WHICH TYPE OF POOLS?

| | |
|---|---|
| Types of pools | Private in-ground pools,Above ground pools,With rigid walls |
| Maximum pool dimensions | 10 x 5 m |
| Pool shape | Oval,Rectangular,Free shape |
| Pool floor | Flat,Gentle Slope,Composite slope,Diamond shape |
| Pool surface | Liner,Painted concrete,Polyester hull,Reinforced PVC,Tiles |

## DESCRIPTION

| | |
|---|---|
| App Control | Yes |
| App Control Type | iAquaLink |
| Cleaning areas | Floor / walls / waterline |
| Cleaning Cycles Numbers | 2 cycles |
| Cleaning Cycles | Floor only: 1h30 - Floor / walls / waterline: 2h |
| Battery runtime | 120 min |
| Charging type | Outdoor charging base |
| Charging time | <5h |
| Timer | No |
| Cleaning steering | Pre-programmed |
| Drive system | Tracks |
| Drive system motors | 2 motors |
| Cleaning transmission | Gear transmission |
| Pressure sensor | No |
| Cleaning brushes | Yes |
| Type of brushes | Front brush |
| Lift system | No |
| Transparent window | Yes |
| Full filter indicator | No |
| Remote control | No |
| Cleaning safety | Deck system,Out of water safety,Diagnostic,Electronic motor protector |
| Filtration system | Rigid Filter canister |
| Filtration access | Top access |
| Water temperature | No |
| Units/pallet | 20 |

## TECHNICAL SPECIFICATIONS

| | |
|---|---|
| Number of motors | 3 |
| Battery Type | Lithium-Ion |
| Filtering surface | 526 $cm^2$ |
| Filtration Level | 100µ |
| Filtering capacity | 4 L |
| Inlet suction size | 23 cm |
| Product Dimensions | 43 x 40 x 30 cm |
| Packaging Dimensions | 56 x 56 x 47 cm |
| Product Weight | 9.2 kg |
| Packaged Weight | 14,5 kg |

ZODIAC®

CORDLESS POOL CLEANERS

# RF 5400 iQ - FREERIDER™

Performance with total freedom

**+ Cordless freedom: Lithium-Ion battery / Fast charging / iAquaLink® control**

**+ Cyclonic performance: Patented Cyclonic suction / Integrated agility / Helix brush / Dual filtration**

**+ Easy to use: Easy maintenance / Simple water retrieval**

3 YEAR WARRANTY · FREEDOM TO MOVE · CYCLONIC SUCTION · iAquaLink CONTROL · DUAL FILTRATION

## REFERENCE

| | |
|---|---|
| **Sku Reference** | WR000411 |

## ACCESSORIES INCLUDED IN THE PACK

| | | | |
|---|---|---|---|
| Free app | Dual Filter canister 60µ / 150µ | Universal Hook | Charging base |

## OPTIONAL ACCESSORIES (NOT INCLUDED)

| Main canister 100µ for single filter | Main canister 200µ for single filter |
|---|---|
| R0897500 | R0897700 |

## FOR WHICH TYPE OF POOLS?

| | |
|---|---|
| Types of pools | Private in-ground pools,Above ground pools,With rigid walls |
| Maximum pool dimensions | 12 x 6 m |
| Pool shape | Oval,Rectangular,Free shape |
| Pool floor | Flat,Gentle Slope,Composite slope,Diamond shape |
| Pool surface | Liner,Painted concrete,Polyester hull,Reinforced PVC,Tiles |

## DESCRIPTION

| | |
|---|---|
| App Control | Yes |
| App Control Type | iAquaLink |
| Cleaning areas | Floor / walls / waterline |
| Cleaning Cycles Numbers | 4 cycles |
| Cleaning Cycles | Floor only: 1h30 - Floor/walls/waterline : 2h30 - Smart (from App): calculated time - Waterline only (from App): 0h30 |
| Battery runtime | 150 min |
| Charging type | Outdoor charging base |
| Charging time | <5h |
| Timer | No |
| Cleaning steering | Pre-programmed |
| Drive system | Tracks |
| Drive system motors | 2 motors |
| Cleaning transmission | Gear transmission |
| Pressure sensor | No |
| Cleaning brushes | Yes |
| Type of brushes | Front brush |
| Lift system | No |
| Transparent window | Yes |
| Full filter indicator | No |
| Remote control | No |
| Cleaning safety | Deck system,Out of water safety,Diagnostic,Electronic motor protector |
| Filtration system | Rigid Filter canister |
| Filtration access | Top access |
| Water temperature | No |
| Units/pallet | 20 |

## TECHNICAL SPECIFICATIONS

| | |
|---|---|
| Number of motors | 3 |
| Battery Type | Lithium-Ion |
| Filtering surface | 1066 $cm^2$ |
| Filtration Level | 150/60µ |
| Filtering capacity | 4 L |
| Inlet suction size | 23 cm |
| Product Dimensions | 43 x 40 x 30 cm |
| Packaging Dimensions | 56 x 56 x 47 cm |
| Product Weight | 9.2 kg |
| Packaged Weight | 14.5 kg |

CORDLESS POOL CLEANERS

# RF 5600 iQ - FREERIDER™

+ Cordless freedom: Lithium-Ion battery / Fast charging / iAquaLink® control
+ Cyclonic performance: Patented Cyclonic suction / Integrated agility / Helix brushes / Dual filtration
+ Easy to use: Easy maintenance / Patented lift system with the Lifi remote control

3 YEAR WARRANTY · FREEDOM TO MOVE · CYCLONIC SUCTION · iAquaLink CONTROL · LIFT SYSTEM · DUAL FILTRATION

## REFERENCE

| | |
|---|---|
| **Sku Reference** | WR000507 |

## ACCESSORIES INCLUDED IN THE PACK

| | | | | |
|---|---|---|---|---|
| Lifi remote control | Charging base | Free app | Universal Hook | Dual Filter canister 60µ / 150µ |

## OPTIONAL ACCESSORIES (NOT INCLUDED)

| Main canister 100µ for single filter | Main canister 200µ for single filter |
|---|---|
| R0897500 | R0897700 |

## FOR WHICH TYPE OF POOLS?

| | |
|---|---|
| Types of pools | Private in-ground pools,Above ground pools,With rigid walls |
| Maximum pool dimensions | 12 x 6 m |
| Pool shape | Oval,Rectangular,Free shape |
| Pool floor | Flat,Gentle Slope,Composite slope,Diamond shape |
| Pool surface | Liner,Painted concrete,Polyester hull,Reinforced PVC,Tiles |

## DESCRIPTION

| | |
|---|---|
| App Control | Yes |
| App Control Type | iAquaLink |
| Cleaning areas | Floor / walls / waterline |
| Cleaning Cycles Numbers | 4 cycles |
| Cleaning Cycles | Floor only: 1h30 - Floor/walls/waterline : 2h30 - Smart (from App): calculated time - Waterline only (from App): 0h30 |
| Battery runtime | 150 min |
| Charging type | Outdoor charging base |
| Charging time | <5h |
| Timer | No |
| Cleaning steering | Pre-programmed |
| Drive system | Tracks |
| Drive system motors | 2 motors |
| Cleaning transmission | Gear transmission |
| Pressure sensor | No |
| Cleaning brushes | Yes |
| Type of brushes | Front brush |
| Lift system | Yes |
| Transparent window | Yes |
| Full filter indicator | No |
| Remote control | Yes |
| Cleaning safety | Deck system,Out of water safety,Diagnostic,Electronic motor protector |
| Filtration system | Rigid Filter canister |
| Filtration access | Top access |
| Water temperature | No |
| Units/pallet | 20 |

## TECHNICAL SPECIFICATIONS

| | |
|---|---|
| Number of motors | 3 |
| Battery Type | Lithium-Ion |
| Filtering surface | 1066 $cm^2$ |
| Filtration Level | 150/60µ |
| Filtering capacity | 4 L |
| Inlet suction size | 23 cm |
| Product Dimensions | 43 x 40 x 30 cm |
| Packaging Dimensions | 56 x 56 x 47 cm |
| Product Weight | 9,2 kg |
| Packaged Weight | 14,5 kg |

# HYDRAULIC CLEANERS

## A simple and affordable solution

| COMPARATIVE TABLE OF RANGES | T3® | T5® Duo | MX10® |
|---|---|---|---|
| | | | |
| Pool Dimension max. | 9 x 5 m | 12 x 6 m | 12 x 6 m |
| Number of pipes 1 m - Twist Lock pipe | 10 | 12 | 12 |
| Motion | Diaphragm | Diaphragm | Mechanical |
| Suction | - | - | 2 turbines with brushes |
| **Pool floors** | | | |
| Rectangular | • | • | • |
| Oval | • | • | • |
| Round | • | • | • |
| Free shape | | • | • |
| Floor only | • | | |
| Floor and walls | | • | • |
| Flat | • | • | • |
| Gentle slope | • | • | • |
| Composit slope | | • | • |
| Diamond shape | | | • |
| Minimum power required from the filtration pump | 1/2 HP | 3/4HP | 3/4 HP* |
| Warranty | 2 years | 2 years | 2 years |

* 1 HP needed for tile pools

### STANDARD INSTALLATION

- The suction cleaner is connected directly to the vacuum point or skimmer. No electrical connection required.
- The ideal hose length for the pool equals the greatest distance that the cleaner can cover in the pool from the connection point (skimmer) to the farthest corner of the pool, plus a 1 metre section.
- For optimal installation, perform a flow test and adjust the flow rate using an adjusting valve.

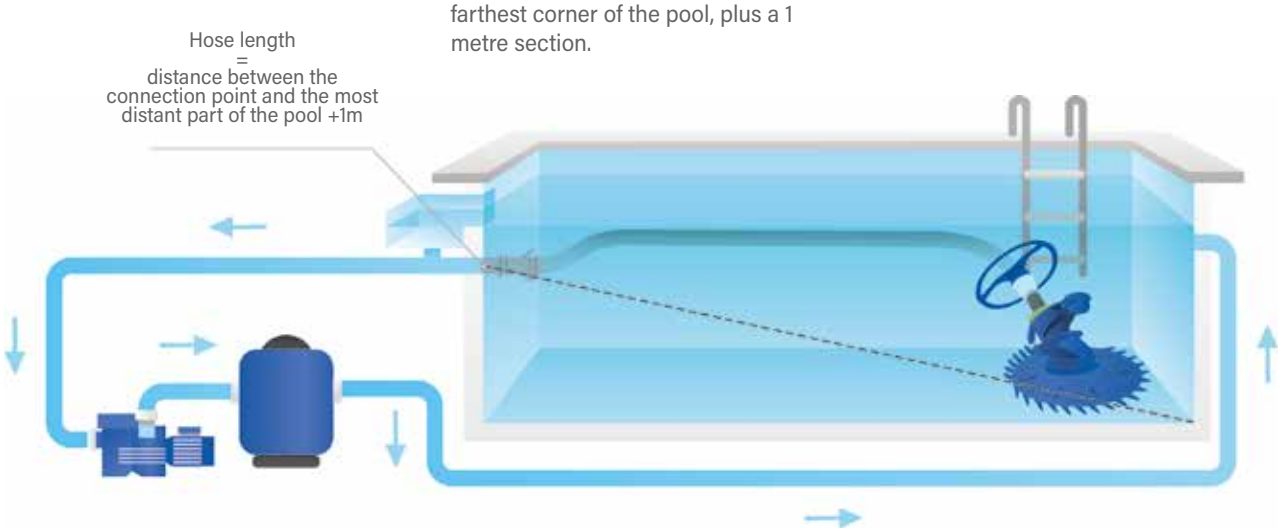

HYDRAULIC POOL CLEANERS

# T3® - Discs

For Cleaning Small And Medium-Sized Pools

+ DiaCyclone Diaphragm : even more powerful suction
+ Finned disc : optimum mobility of the cleaner
+ Obstacle Avoidance

2 YEAR WARRANTY

ALL TYPES OF LINING

## REFERENCE

| | |
|---|---|
| **Sku Reference** | W70674 |

## ACCESSORIES INCLUDED IN THE PACK

| | | | |
|---|---|---|---|
| Wheel deflector | Flowkeeper valve (skimmer) | Twist Lock Hoses | Flow gauge |

## OPTIONAL ACCESSORIES (NOT INCLUDED)

| | |
|---|---|
| 6 section of 1m Twist Lock hoses | Cyclonic™ Leaf Catcher |
| W78055 | W37110 |

## FOR WHICH TYPE OF POOLS?

| | |
|---|---|
| Types of pools | Private in-ground pools,Above ground pools,With rigid walls |
| Maximum pool dimensions | 9 x 5 m |
| Pool shape | Rectangular,Oval |
| Pool floor | Flat,Gentle Slope |
| Pool surface | Liner,Painted concrete,Polyester hull,Reinforced PVC,Tiles |

## DESCRIPTION

| | |
|---|---|
| App Control | No |
| Cleaning areas | Floor |
| Cleaning Cycles | Recommended 6h filtering in three 2h sessions |
| Cleaning steering | Random |
| Cleaning brushes | No |
| Filtration system | Suction line or skimmer |
| Units/pallet | 27 |

## TECHNICAL SPECIFICATIONS

| | |
|---|---|
| Power supply | Pool filtering group |
| Cable length and hose length | 10 sections of 1 m |
| Filtering surface | Pool filtering circuit |
| Filtration Level | Pool filtering circuit |
| Inlet suction size | 30 cm |
| Displacement speed | 6,5 m / min |
| Required equipment | 0,5 HP |
| Product Dimensions | 41 x 36 x 28 cm |
| Packaging Dimensions | 103 x 42 x 22 cm |
| Product Weight | 1.2 kg |
| Packaged Weight | 6.8 kg |

HYDRAULIC POOL CLEANERS

# T5®Duo - Discs

Simple And Efficient

+ DiaCyclone Diaphragm : even more powerful suction
+ Flexible Duo Traction Control disc in 2 parts: optimum grip
+ Obstacle Avoidance

2 YEAR WARRANTY

ALL TYPES OF LINING

## REFERENCE

| | |
|---|---|
| **Sku Reference** | W78046 |

## ACCESSORIES INCLUDED IN THE PACK

| | | | |
|---|---|---|---|
| Flow gauge | Flowkeeper valve (skimmer) | Twist Lock Hoses | Wheel deflector |

## OPTIONAL ACCESSORIES (NOT INCLUDED)

| | |
|---|---|
| 6 section of 1m Twist Lock hoses | Cyclonic™ Leaf Catcher |
| W78055 | W37110 |

## FOR WHICH TYPE OF POOLS?

| | |
|---|---|
| Types of pools | Private in-ground pools,Above ground pools,With rigid walls |
| Maximum pool dimensions | 12 x 6 m |
| Pool shape | Oval,Rectangular,Free shape |
| Pool floor | Flat,Gentle Slope,Composite slope |
| Pool surface | Liner,Painted concrete,Polyester hull,Reinforced PVC,Tiles |

## DESCRIPTION

| | |
|---|---|
| App Control | No |
| Cleaning areas | Floor / walls |
| Cleaning Cycles | Recommended 6h filtering in three 2h sessions |
| Cleaning steering | Random |
| Cleaning brushes | No |
| Filtration system | Suction line or skimmer |
| Filtration access | Suction line or skimmer |
| Water temperature | No |
| Units/pallet | 24 |

## TECHNICAL SPECIFICATIONS

| | |
|---|---|
| Power supply | Pool filtering group |
| Cable length and hose length | 10 sections of 1 m |
| Filtering surface | Pool filtering circuit |
| Filtration Level | Pool filtering circuit |
| Inlet suction size | 44 cm |
| Displacement speed | 6 m / min |
| Required equipment | 0,75 HP |
| Product Dimensions | 44 x 43 x 22 cm |
| Packaging Dimensions | 99 x 46 x 30 cm |
| Product Weight | 1.4 kg |
| Packaged Weight | 8.4 kg |

# MX10™

## ACTIVE BRUSHING FOR DEEP CLEANING

### CYCLONIC BRUSHING

With cyclonic brushing technology, it can remove dirt that is stuck to the pool before sucking it up. The robot's active brushes mean it can remove all types of debris, including stubborn algae that stick to the pool floor and sides.

### METHODICAL CLEANING

With its pre-programmed X-Drive navigation system, the MX10 methodically moves over all the areas to be cleaned, and ensures unbeatable coverage, whatever your pool's shape or size.

### TURBO SUCTION

The MX10 turbo suction system uses a powerful turbine and two edge suction propellers that channel all dirt and debris into the mouth of the cleaner. It guarantees ultra-efficient cleaning, even with a low flow.

### CONVERTIBLE SUCTION INLET

Convertible debris suction inlet for large or small debris.

HYDRAULIC POOL CLEANERS

# MX10™ - MX™ RANGE

Active brushing for deep cleaning

+ Pre-programmed X-Drive navigation system: methodical cleaning af all areas
+ Turbo aspiration a powerfull turbine and two peripheral propellers with brushes
+ Ergonomic handle: for an easier water removal

2 YEAR WARRANTY

## REFERENCE

| | |
|---|---|
| **Sku Reference** | WS000075 |

## ACCESSORIES INCLUDED IN THE PACK

| | | | | | |
|---|---|---|---|---|---|
| Twist Lock Hoses | Flow Regulator Valve (cleaner) | 45° Elbow extended | Cyclonic scrubbing brushes | In-ground valve cuff | Flowkeeper valve (skimmer) |

## OPTIONAL ACCESSORIES (NOT INCLUDED)

| 6 section of 1m Twist Lock hoses | Cyclonic™ Leaf Catcher |
|---|---|
| W78055 | W37110 |

## FOR WHICH TYPE OF POOLS?

| | |
|---|---|
| Types of pools | Private in-ground pools,Above ground pools,With rigid walls |
| Maximum pool dimensions | 12 x 6 m |
| Pool shape | Oval,Rectangular,Free shape |
| Pool floor | Flat,Gentle Slope,Composite slope |
| Pool surface | Liner,Painted concrete,Polyester hull,Reinforced PVC,Tiles |

## DESCRIPTION

| | |
|---|---|
| App Control | No |
| Cleaning areas | Floor / walls |
| Cleaning Cycles | Recommended 6h filtering in three 2h sessions |
| Timer | No |
| Cleaning steering | Pre-programmed |
| Cleaning transmission | Gear transmission |
| Pressure sensor | No |
| Cleaning brushes | Yes |
| Type of brushes | Cyclonic Brushes |
| Filtration system | Suction line or skimmer |
| Filtration access | Suction line or skimmer |
| Water temperature | No |
| Units/pallet | 30 |

## TECHNICAL SPECIFICATIONS

| | |
|---|---|
| Power supply | Pool filtering group |
| Cable length and hose length | 12 sections of 1 m |
| Filtering surface | Pool filtering circuit |
| Filtration Level | Pool filtering circuit |
| Inlet suction size | 36 cm |
| Displacement speed | 8 |
| Required equipment | 0,75 HP Bosster pump (1 HP for tiles pools) |
| Product Dimensions | 41 x 19 x 22 cm |
| Packaging Dimensions | 102 x 23 x 37 cm |
| Product Weight | 3.2 kg |
| Packaged Weight | 9.5 kg |

SPA CLEANERS

# Spa wand - Spa Wand

For Targeted Cleaning

+ Targeted cleaning of small volumes: spa, steps…
+ Efficient and easy to use handheld brush and no connection required
+ Debris are collected in a separate stainless steel filter

2 YEAR WARRANTY

ALL TYPES OF LINING

ALL TYPES OF SPAS

## REFERENCE

| | |
|---|---|
| **Sku Reference** | W9320018 |

## ACCESSORIES INCLUDED IN THE PACK

| | | |
|---|---|---|
| | | |
| 2 sweeping nozzles | Wall bracket | Steel Filter |

## FOR WHICH TYPE OF POOLS?

| | |
|---|---|
| Types of pools | Private in-ground pools,Above ground pools,With rigid walls,Private in-ground and above-ground spas |
| Pool shape | Oval,Rectangular,Free shape |
| Pool floor | Flat,Gentle Slope,Composite slope |
| Pool surface | Liner,Painted concrete,Polyester hull,Reinforced PVC,Tiles |

## DESCRIPTION

| | |
|---|---|
| App Control | No |

## TECHNICAL SPECIFICATIONS

| | |
|---|---|
| Power supply | Manual brush |
| Product Dimensions | 7 x 7 x 144 cm |
| Packaging Dimensions | 8 x 9 x 146 cm |
| Product Weight | 1.2 kg |
| Packaged Weight | 1.7 kg |

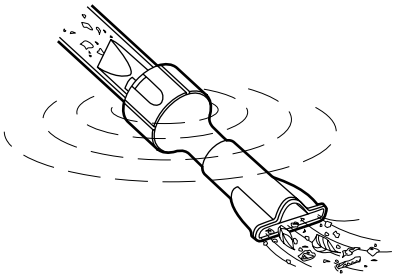

Wide sweeping nozzle: specially designed for surface floating debris or suspended debris.

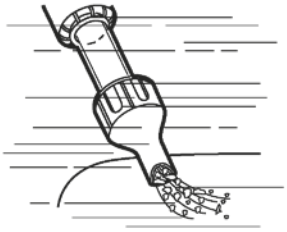

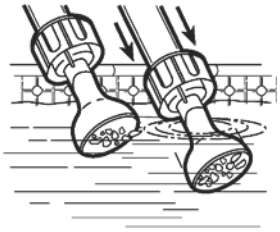

Double function nozzle: specially designed for debris at the bottom and corners.

# DIAGNOSTIC TOOLS

## DIAG BOX

+ Simple system with display for off-line use (without a PC)
+ Possible out-of-water testing in off-line mode
+ Can be connected to a PC for full diagnostic check
+ Multiple light panel provided with colour coding for all products

### WHICH PRODUCTS?

All Vortex™ products (including Vortex™1) All Tornax™
All CyclonX™ products
Lazernaut NT, Cybernaut™ NT (2010 ONWARDS)

### TESTED ELEMENTS?

In off-line mode: box/motor block/cable/remote control

Voyager/XA type/ CNX, Alpha iQ platforms connot be diagnose with the Diag box as well as the cordless robotic cleaners Freerider/ CNX-Li, Torbat, Spa bot.
For corded cleaners, the diagnostic must be performed with its own control box (by entering in Diagnostic mode. See details in the
technical procedure or with an Alpha iQ control box which diag Alpha iQ & Voyager/XA Type/CNX models too).
For cordless cleaner, enter the diagnostic mode on the robot control screen (See details in the technical procedure)

### PRODUCT REFERENCE

Product reference: R0685300

| Robot type | Elements to be tested | Type of cable to be connected |
|---|---|---|
| CyclonX™ | Robot | GREY adapter |
| | Control unit | BLUE adapter |
| Vortex™ TornaX | Motor block | BROWN adapter |
| | Robot | Robot floating cable |
| | Control unit | GREEN adapter |
| Vortex™1 | Robot | RED adapter |
| Lazernaut, Cybernaut™ NT (>2010) | Robot (via robot control unit) | YELLOW adapter |

## DIAG CABLE MOTOR BLOCK FOR SELF-DIAGNOSABLE PLATFORMS

### WHICH PRODUCTS?

Brown adapter (identical to the one supplied in the Diag box) to diagnose the motor block of models of Alpha iQ™ range by connecting the motor **directly to the control box of the cleaner.**

### PRODUCT REFERENCE

Product reference: R0616900

### WHICH PRODUCTS?

White adaptator (identical to the one supplied in the Diag box) to diagnose the motor block of models of Voyager/XA Type/CNX ranges by connecting the motor directly to the control box of the cleaner

### PRODUCT REFERENCE

Product reference: R0616900

HYDRAULIC POOL CLEANERS

# Cyclonic™ Leaf Catcher

The Ideal Accessory For Capturing Debris

+ Cyclone suction system: constant suction and dirt remains in suspension
+ No pressure on the pump
+ Large, transparent, easy-to-empty filter basket
+ Fits all hose types

2 YEAR WARRANTY

CYCLONIC SUCTION

| REFERENCE | |
|---|---|
| **Sku Reference** | W37110 |

## ACCESSORIES INCLUDED IN THE PACK

Standard hose and Twist Lock hose adaptors

## DESCRIPTION

| | |
|---|---|
| Transparent window | Yes |
| Filtration system | Suction line or skimmer |
| Filtration access | Suction line or skimmer |

## TECHNICAL SPECIFICATIONS

| | |
|---|---|
| Product Dimensions | 23 x 19 x 28 cm |
| Packaged Packaging Dimensions | 24 x 20 x 29 cm |
| Packaged Product Weight | 1 kg |
| Packaged Packaging Weight | 1.3 kg |

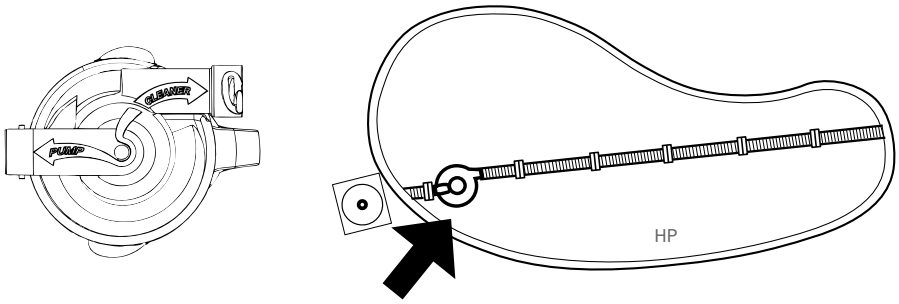


Install at the first hose connection closest to skimmer/or suction line.
Ensure correct orientation using guides (Pump/Cleaner) on Leaf Catcher lid.

# > Polaris
# The high pressure cleaner

The cleaner sucks in debris using a physical principle called **'Venturi effect',** which is produced inside the machine and **converts the incoming water into a powerful suction current.**

This characteristic provides maximum efficiency in the minimum time.

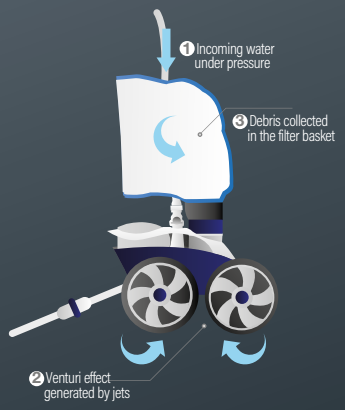


## EQUIPMENT NEEDED

- The pipes of the vacuum point must be made of RIGID 16 bar PVC and not flexible material
- Booster, minimum 1 HP coupled to filtration

**For optimum operation, advise your customers to equip their pools with an electrical programming box and a Polaris® booster. This guarantees complete compatibility and ideal suction power.**

- Minimum operating pressure 1.8 bar

## STANDARD INSTALLATION

1. Water is sucked by the pump through the skimmers and the floor drain.
2. The water is sent to the filter to be cleaned.
3. The water is returned clean to the swimming pool through the return discharges.
4. A detour is created on this pipework to feed the booster.
5. Polaris® pressure cleaners are connected to the vacuum point converted into return discharge.
6. The Venturi effect generated by the jets converts the incoming water into a powerful suction current and enables the cleaner to move.
7. The length of the pipe must be equal to the distance between the return pipe (5) and the furthest point (7).

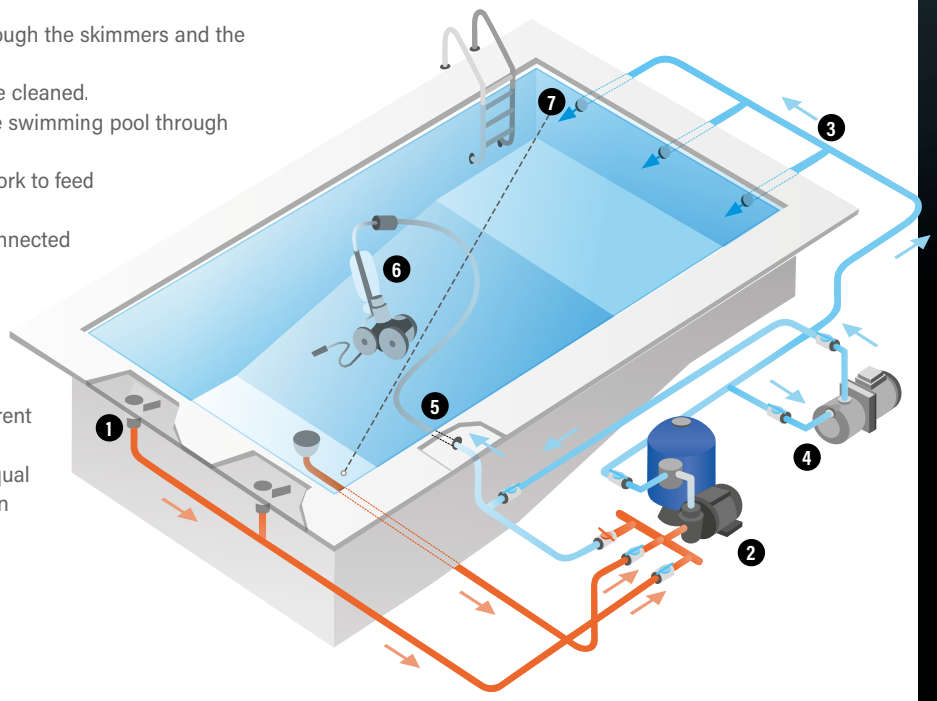


## INSTALLATION OF THE PIPE

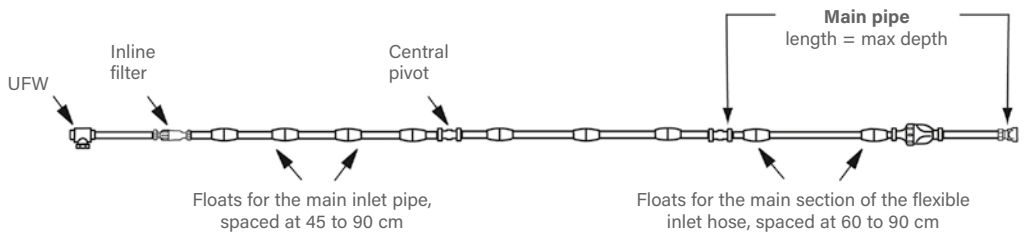

PRESSURE POOL CLEANERS

# Polaris® 280

- 2 jets, ultra-powerful suction
- Wide suction aperture
- Automatic back-up valve, anti-jamming.

2 YEAR WARRANTY

ALL TYPES OF POOLS

| REFERENCE | |
|---|---|
| **Sku Reference** | W7220000 |

## ACCESSORIES INCLUDED IN THE PACK

| | |
|---|---|
| standard sand/silt bag | Back-up valve |

## OPTIONAL ACCESSORIES (NOT INCLUDED)

| Disposable bags (EZ Bag) (packs of 6) | Standard silt bag | Leaf bag | Ultra fine bag | PosiTrax Tire | Tail Sweep Pro |
|---|---|---|---|---|---|
| W7230114 | W7230102 | W7230104 | W7230103 | W7230211 | W7220032 |

## FOR WHICH TYPE OF POOLS?

| | |
|---|---|
| Types of pools | Private in-ground pools |
| Maximum pool dimensions | 7 x 14 m |
| Pool shape | All shapes |
| Pool floor | Flat,Gentle Slope,Composite slope,Diamond shape,Diving pit |
| Pool surface | Liner |

## DESCRIPTION

| | |
|---|---|
| App Control | No |
| Cleaning areas | Floor / walls |
| Timer | No |
| Cleaning steering | Random and automatic reverse |
| Drive system | Shaft drive mechanism |
| Cleaning brushes | Yes |
| Filtration system | Fabric Filter bag |
| Filtration access | Top access |
| Water temperature | No |
| Units/pallet | 36 |

## TECHNICAL SPECIFICATIONS

| | |
|---|---|
| Power supply | Booster pump coupled to filtering |
| Inlet suction size | 6 cm |
| Displacement speed | 15 m / min |
| Required equipment | 1 HP booster pump |
| Cleaning operating pressure | 2,2 bars |
| Cleaning brush socket line | Fixed hose 16 bars |
| Product Dimensions | x x cm |
| Packaging Dimensions | x x cm |
| Product Weight | 3.2 kg |
| Packaged Weight | kg |

PRESSURE POOL CLEANERS

# Polaris® 380

- 3 jets, ultra-powerful suction
- Hight speed cleaning
- Automatic back-up valve, anti-jamming.

2 YEAR WARRANTY

ALL TYPES OF POOLS

## REFERENCE

| | |
|---|---|
| **Sku Reference** | W7320000 |

## ACCESSORIES INCLUDED IN THE PACK

| | |
|---|---|
| | |
| Back-up valve | standard sand/silt bag |

## OPTIONAL ACCESSORIES (NOT INCLUDED)

| Standard silt bag | Leaf bag | Ultra fine bag | PosiTrax Tire | Tail Sweep Pro |
|---|---|---|---|---|
| W7330105 | W7330101 | W7330103 | W7230211 | W7220032 |

## FOR WHICH TYPE OF POOLS?

| | |
|---|---|
| Types of pools | Private in-ground pools |
| Maximum pool dimensions | 7 x 14 m |
| Pool shape | All shapes |
| | |
| Pool surface | Liner |

## DESCRIPTION

| | |
|---|---|
| App Control | No |
| Cleaning areas | Floor / walls |
| Cleaning steering | Random and automatic reverse |
| Drive system | All-Wheel belt drive mechanism |
| Cleaning brushes | Yes |
| Filtration system | Fabric Filter bag |
| Filtration access | Top access |
| Water temperature | No |
| Units/pallet | 16 |

## TECHNICAL SPECIFICATIONS

| | |
|---|---|
| Power supply | Booster pump coupled to filtering |
| Inlet suction size | 6 cm |
| Displacement speed | 20 m / min |
| Required equipment | 1 HP booster pump |
| Cleaning operating pressure | 1,8 bars |
| Cleaning brush socket line | Fixed hose 16 bars |
| Product Dimensions | x x cm |
| Packaging Dimensions | x x cm |
| Product Weight | 2.5 kg |
| Packaged Weight | kg |

Available until end of stock

PRESSURE POOL CLEANERS

# Polaris® 3900 Sport

- 3 jets, ultra-powerful suction
- 3 wheel drive fitted with wide tyres
- Automatic back-up valve, anti-jamming.
- Stainless steel chain, highly reliable gear system.

2 YEAR WARRANTY

ALL TYPES OF POOLS

| REFERENCE | |
|---|---|
| **Sku Reference** | W7620000 |

## ACCESSORIES INCLUDED IN THE PACK

| | | | |
|---|---|---|---|
| Ultra-fine filter bag | Tail Sweep Pro | Back-up valve | Double capacity filter bag |

## OPTIONAL ACCESSORIES (NOT INCLUDED)

| Disposable bags (EZ Bag) (packs of 6) | Standard, double capacity silt bag | Standard silt bag | Leaf bag | Ultra fine bag |
|---|---|---|---|---|
| W7230114 | W7610000 | W7230111 | W7230104 | W7230109 |

## FOR WHICH TYPE OF POOLS?

| | |
|---|---|
| Types of pools | Private in-ground pools |
| Maximum pool dimensions | 7 x 14 m |
| Pool shape | All shapes |
| Pool floor | Flat,Gentle Slope,Composite slope,Diamond shape,Diving pit |
| Pool surface | Liner |

## DESCRIPTION

| | |
|---|---|
| App Control | No |
| Cleaning areas | Floor / walls |
| Cleaning steering | Random and automatic reverse |
| Drive system | All-Wheel belt drive mechanism |
| Cleaning brushes | Yes |
| Filtration system | Fabric Filter bag |
| Filtration access | Top access |
| Water temperature | No |
| Units/pallet | 16 |

## TECHNICAL SPECIFICATIONS

| | |
|---|---|
| Power supply | Booster pump coupled to filtering |
| Inlet suction size | 6 cm |
| Displacement speed | 20 m / min |
| Required equipment | 1 HP booster pump |
| Cleaning operating pressure | 2,2 bars |
| Cleaning brush socket line | Fixed hose 16 bars |
| Product Dimensions | x x cm |
| Packaging Dimensions | x x cm |
| Product Weight | 3.5 kg |
| Packaged Weight | kg |

Polaris

PRESSURE POOL CLEANERS

# Polaris® QUATTRO™ Sport

- 3 jets, ultra-powerful suction
- Large debris intake
- Multi-directional navigation
- Dual-stage filtration

2 YEAR WARRANTY

ALL TYPES OF POOLS

| REFERENCE | |
|---|---|
| **Sku Reference** | WE000028 |

## ACCESSORIES INCLUDED IN THE PACK

Dual stage filter canister 3.5L

## OPTIONAL ACCESSORIES (NOT INCLUDED)

| All-purpose filter canister | Fine filter canister |
|---|---|
| R0836300 | R0836400 |

## FOR WHICH TYPE OF POOLS?

| | |
|---|---|
| Types of pools | Private in-ground pools |
| Pool shape | All shapes |
| Pool floor | Flat,Gentle Slope,Composite slope,Diamond shape,Diving pit |
| Pool surface | Liner,Painted concrete,Polyester hull,Reinforced PVC |

## DESCRIPTION

| | |
|---|---|
| App Control | No |
| Cleaning areas | Floor / walls |
| Timer | No |
| Cleaning steering | Random and multi-directional |
| Drive system | 4 wheel drive |
| Pressure sensor | No |
| Cleaning brushes | Yes |
| Type of brushes | Front brush |
| Transparent window | Yes |
| Filtration system | Rigid Filter canister |
| Filtration access | Top access |
| Water temperature | No |
| Units/pallet | 30 |

## TECHNICAL SPECIFICATIONS

| | |
|---|---|
| Power supply | Booster pump coupled to filtering |
| Inlet suction size | 7 cm |
| Displacement speed | 16 m / min |
| Required equipment | 1 HP booster pump |
| Cleaning operating pressure | 2,2 bars |
| Cleaning brush socket line | Fixed hose 16 bars |
| Product Dimensions | x x cm |
| Packaging Dimensions | x x cm |
| Product Weight | 6.8 kg |
| Packaged Weight | kg |

PRESSURE CLEANER

# Polaris Booster Pump & Control box

+ All water treatment adapted (sea water, chlorine water, demineralized water...)
+ Distance from the pool up to 20 meters
+ Connection kit "Quick Connect" includ in the BPK pack

ALL TYPES OF POOLS

| | Booster pump without connexion kit | Booster pump with connexion kit |
|---|---|---|
| **REFERENCE** | | |
| Standard Model | BP / W4530247 | BPK / W4530248 |

| GENERAL | |
|---|---|
| Power | 1 CV single phase |
| Type | Multicellular |
| Body and turbine | Noryl® |
| Composition | Pump + Kit Quick Connect (BPK) |
| Weight | 11 kg |
| Guarantee | 2 ans |

| TECHNICAL SPECIFICATIONS | |
|---|---|
| Supply voltage | 220-240 V |
| Consumption | 0,75 kW |
| Turbine shaft | Inox AISI 420 |
| RPM | 2800 rpm |
| Bust of AMP | 5,3 A |
| Protection index | Watertightness IP-55 |

+ Ideal to be combined with Polaris Cleaners
+ Easy to program
+ Magnetic-thermal breaker to protect the system

| | Electric box |
|---|---|
| **REFERENCE** | |
| Standard Model | 045550POLARIS |

| GENERAL | |
|---|---|
| Size | L. 220 x l. 200 x H. 200 mm |
| Weight | 1 kg |
| Guarantee | 2 ans |

| TECHNICAL SPECIFICATIONS | |
|---|---|
| Electrical supply | 1 ph 230 V / 50 Hz |
| Circuit breaker | 4 to 6,3 A |
| Switch main power | Auto / stop / manual |
| Protection index | Watertightness IP-65 |
| Installation | 30 mA |

PRESSURE CLEANER

# Polaris TailSweep PRO

- Optimized removal of debris in the pool
- Reduced water spraying around the pool
- Easy to install at the end of the flexible hose of Polaris® robot cleaners
- Suitable for all models of Polaris® pressure cleaners

| | 18 units Display | Case of 12 units |
|---|---|---|
| **REFERENCE** | | |
| Standard Model | W7220031 | W7220032 |

## ACCESSORIES INCLUDED IN THE PACK

| | |
|---|---|
| | |
| Foam brush | Tail sweep |

## TECHNICAL SPECIFICATIONS

| | |
|---|---|
| Dimensions of the accessory (L x D x h) | 10 x 5 x 5 cm |
| Packaging dimensions (L x D x h) | 11 x 5 x 5 cm |
| Weight of the accessory | 21 g |
| Packaged weight | 39 g |

## GENERAL SPECIFICATIONS

| | |
|---|---|
| Installation | By the user, on the end of the flexible hose of the pressure cleaner |

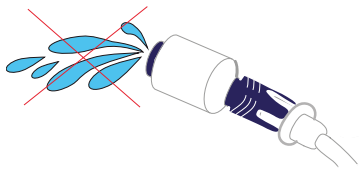

In the water :
The Trail Sweep Pro® side inlets are used to suck in the water which is re-injected by Venturi effect into the diffuser :
- Increased flow rate
- Optimised removal of debris

Side inlets for water suction or air suction

Diffuser for water dispersion

Out of the water :
As soon as these inlets emerge from the water, the air which is sucked in cuts the injection of water to avoid water being sprayed outside the pool.

# HEATING AND COOLING


464 SWIMMING POOL HEATING SOLUTIONS

465 HEAT PUMPS

ZODIAC®

468 HEAT PUMPS

470 COMPARATIVE TABLE

474 SIZING TABLES

476 PRODUCT RANGES

476 Z550iQ
477 Z550iQ - R410A
478 Z400iQ
479 Z400iQ Stainless
480 Z350iQ
481 Z260iQ
482 Z250iQ
483 Z250
484 Power Force
485 PX50
486 PM40
487 HPO
488 Z300
489 Z200 Defrost
490 Z200

495 HEAT EXCHANGERS

496 Uranus
498 Heat Line

500 ELECTRIC HEATERS

501 RE/U
502 Red Line
503 RE/L

ASTRALPOOL®

504 HEAT PUMPS

504 COMPARATIVE TABLE

506 SIZING TABLES

507 PRODUCT RANGES

507 AstralPool Heat 3
508 ProElyo Touch
509 Eco Elyo
510 Bering Inverter
511 Evoline

512 CHILLERS

512 Alaska
513 Siberia

AQUA SPHERE

516 HEAT PUMPS

517 COMPARATIVE TABLE

518 PRODUCT RANGES

518 VSN
519 VSP
520 FSN
521 FSP
522 VSN (V2)
523 FSN (V2)

# HEATING

# SWIMMING POOL HEATING SOLUTIONS

## Different heating solutions

**Did you know it ?**

- Equipping the pool with an isothermal cover allows to reduce the needed power (less powerful heat pump), and consequently, the consumption !
- Using the heat pump when the outdoor air is the hottest will allow to maximize the performances (hence minimize the electricity consumption). Heating during hot sunny days and covering at night is the optimal solution!
- Covering the pool at night (or when the outdoor air T°C is fresher) with an isothermal cover, will slow down the decrease of pool T°C.

## > PARAMETERS FOR CHOOSING A HEATING SYSTEM

To define a system suitable for a pool, many parameters need to be considered. The most important parameters (but non-exhaustive) are the ones below:

1. Geographical location
2. Target temperature
3. Period of use
4. Pool volume ($m^3$)
5. Presence of an isothermal cover or not
6. Filtration time

To consider all the parameters which impact the sizing of a heating system, online configurators are available:

- For professionals, visit our pro space website: https://pro.fluidra.com/

- For public use, visit our Zodiac website with a simplified and user-friendly interface: https://www.zodiac.com.

The choice of heating equipment also depends on the energy source that will be used.

| COMPARATIVE TABLE OF RANGES | Heat pumps | Electric heaters | Heat exchangers |
|---|---|---|---|
| | | | |
| Solution | Stand-alone, dedicated to the pool | Stand-alone, dedicated to the pool | Coupled to the domestic heating |
| Energy used | Electricity | Electricity | Domestic heating source (gas, oil, electricity, renewable, etc.) |
| Running cost | €* | €€€ | € to €€€** |
| Investment | €€ | € | € |
| Advantages | Energy efficient | Simple installation | Compatible with all heating systems |
| Uses | All open air or indoor pools | Spas and pools used at weekends or holiday homes | Indoor and outdoor pools close to the boiler in the house |

* A heat pump is a very efficient solution which can restitute great more power than it consumes thanks to its thermodynamic system.

** The running cost will depend on the heating source. If renewable (e.g solar energy), it will be very low. However, with a gas, oil or electricity heating source, the running costs will be higher.

# HEAT PUMPS

## The economical and ecological solution

Heat pumps are the ideal solution for heating the pool while also saving energy.

### > HOW DOES IT WORK?

The heat pump is a **thermodynamic system.** Its operating principle is very simple: the system takes calories from the air and transfers them directly to the water in the pool.

**80% of the energy comes from the air.**
**20% of the energy comes from your electricity supplier.**

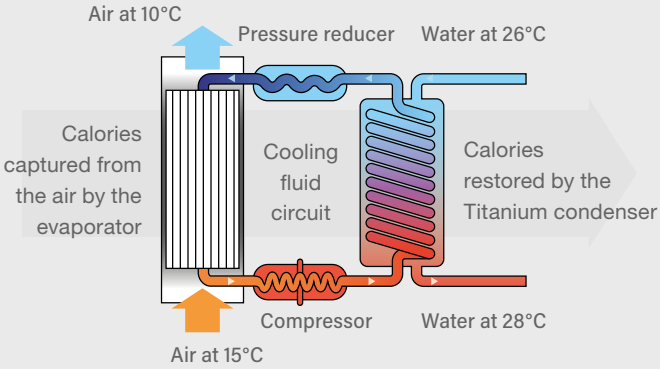


**The heat pump recovers calories from the outside air.**
**The heat pump restores calories to the water in the pool by thermodynamic exchange.**

Heat pumps can be installed easily on pools under construction and on existing pools, by a simple electrical and hydraulic connection.

# ENVIRONMENTAL STANDARD (EN 17645)

**A new Standard was published in September 2022 : EN 17645 . It concerns outdoor pools (as defined in EN 16582) intended to be permanently installed (inground and above ground pools)**

The main objectives of this standard is to bring an environmental assessment of the use of residential swimming pools by:

- Addressing the environmental performances of domestic swimming pools,
- Improving the efficiency of the products and encourage the development of energy-efficient and environmentally-friendly products,
- Promoting good practices in terms of energy savings.

## > WHICH IMPACT FOR HEAT PUMPS ?

- The performances of a heat pump is based on a SCOP (Seasonal Coefficient Performance) calculation. It corresponds to a class from A to F which allows to compare all the heat pumps on the market under the same conditions.
- "A" means the heat pump has a very good efficiency, "F" a much lower efficiency.

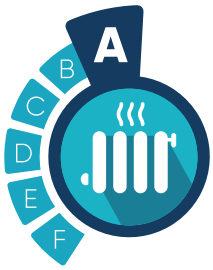


## > HOW TO CALCULATE A SCOP

We measure 5 different COP of the heat pump at different air temperatures and compressor speeds such as:

- COP at 7°C Air at 100% compressor speed
- COP at 15°C Air at 30%, 65% and 100% compressor speed
- COP at 26°C Air at 30% compressor speed

Then, the SCOP will be calculated using a formula weighting the measured COP

| SCOP of the heating system | Corresponding class |
|---|---|
| SCOP ≥ 7 | A |
| 7 > SCOP ≥ 6 | B |
| 6 > SCOP ≥ 4 | C |
| 4 > SCOP ≥ 3 | D |
| 3 > SCOP ≥ 1 | E |
| SCOP < 1 | F |

# R290 A NEW GREENER GAS (PROPANE)

**R290, a propane refrigerant gas, is becoming the best environmental new alternative to R32 thanks to a lower Global Warming Potential (GWP).**

- GWP R290 = 3
- GWP R32 = 675

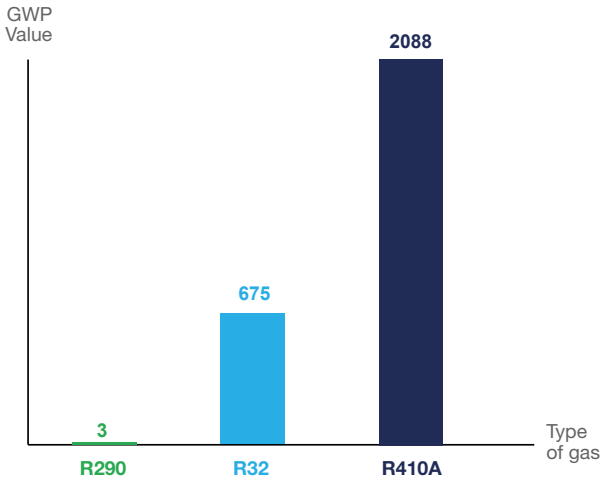


In addition to its lower GWP impact, R290 also has high energy efficiency and keep very good performances.

## > DID YOU KNOW ?

**Quick Start Guides (QSG)**

In order to reduce our environmental footprint, a shorter and simplified version of the user manual is progressively delivered with each heat pumps. It allows to reduce the number of pages up to 60%. The complete user manual is still available on brands websites and inside the App.

# HEAT PUMPS

## Understanding the concept of performance

Two main values characterise the performance of heat pumps: their power and their performance coefficient.

- **Power, expressed in kW**, indicates the quantity of heat transferred to the water.

It is expressed in specific climatic conditions to which the heat pump is exposed during use:

- Temperature of the outside air
- Humidity of the outside air
- Temperature of the water in the pool.

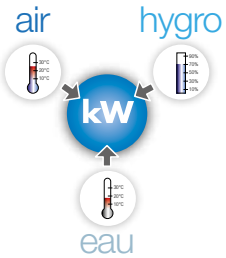


The power of a heat pump will mostly depend on the outside air temperature.
The hotter the air is, the higher the power in kW, hence the higher COP.

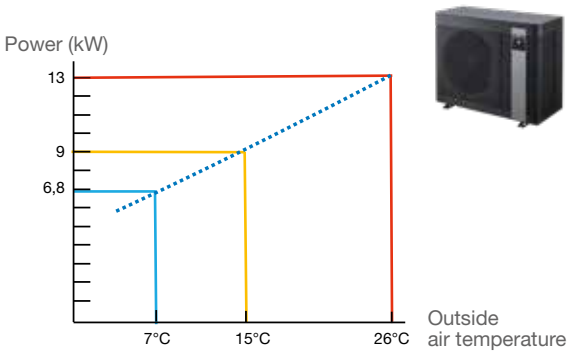


For instance (see graphic), a Z250iQ will restitute 9kW @15°C air / 26°C water / 70% humidity.

Accordingly, it is very important to compare performances in the same conditions !

- The **coefficient of performance (COP)** is the ratio between the restituted power and the power consumption of the heat pump. As a result, it is the ratio at specific climatic conditions too.

As an example, a performance coefficient of 5 means that for 1 kWh consumed at the electricity meter, the heat supplies 5 times more energy to the water in the pool, or 5 kWh.

So the higher the performance coefficient, the more efficient and economical the system.

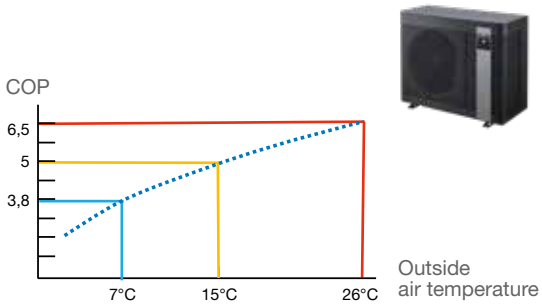


## A silent installation

### > HOW TO READ ACOUSTIC VALUES

The latest technologies used in the design of evaporators, fans and compressors make Zodiac® heat pumps extremely quiet.

The noise level should be measured by a certified body to obtain a real and objective value. It is expressed:

- Either **as acoustic power dB(A):** this is the unmodified noise level of the emitting source.
- Or **as acoustic pressure dB(A):** this is the sound level perceived by the human ear. It depends on the installation environment and distance at which the measurement is made. It must therefore always include a measuring distance.

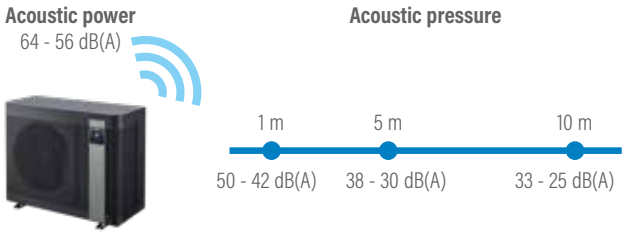


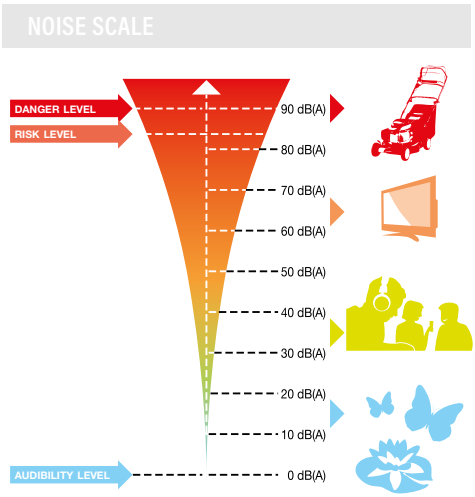


**To compare the noise level of several machines, check what type of value you have, power or pressure, and if it is pressure then at what distance it is measured!**

# HEAT PUMPS

## Main features

### > CONNECTIVITY

Thanks to Fluidra Pool app intuitive interface, connect and control easily the heat pump remotely (and other Fluidra products ; see chapter Internet of Pools) from anywhere at any time with a smartphone.

Fluidra Pool app is GDPR compliant (General Data Protection Regulation) to ensure the personal data protection.

### BRING CONNECTIVITY WITH IQBRIDGE RS

iQBridge RS is a plug & play WiFi gateway to easily connect some of the heat pumps (see comparative tables) to the homeowner WiFi network and benefit from Fluidra Pooll app control experience.

See « Internet of Pools » section for more details about iQBridge RS and FluidraPool app benefits.

### > FULL INVERTER TECHNOLOGY

Full Inverter technology enables a heat pump to change its power mode depending on the pool heating needs. It therefore runs to achieve the best energy efficiency at the lowest noise level.

Full inverter Technology with 3 operating modes :

- Boost: Maximum power for quick heating at the beginning of the season
- Smart: Automatic power adjustment between Ecosilence and Boost
- Ecosilence: Greater energy savings and lower noise level

### > VERTICAL BLOWING ADVANTAGES

- It is typically suitable for small spaces as a reduced free area is required around the unit.
- With a same sound level between a horizontal and vertical heat pump, the perceived sound level will be lower for vertical heat pumps because the air is blown upwards.
- Thanks to the vertical blowing, the cold air is not blown to the feet.

### > AUTOMATIC COOLING MODE

For pools with liners, it is not recommended to maintain the temperature of the water in the pool at a higher temperature than +30°C to prevent water quality from deteriorating, turning green and damaging the liner. In hot areas, during hot seasons or if the pool is equipped with a shelter, it is common that the pool water temperature can exceed +30°C.

A heat pump with an automatic cooling mode will stabilize the pool water temperature at the desired target.

### > DEFROSTING PRINCIPLE

When the outside temperature is low, the evaporator will tend to ice up, which reduces its efficiency: this ice must therefore be removed by cycle inversion.

The refrigerating circuit is reversed, heat from the water in the pool is taken to defrost the evaporator. Defrosting allows an extended / full year use.

# > INSTALLATION RECOMMENDATIONS

- Outside, close to the technical room, at sufficient distance from the pool (according to applicable electrical standards).
- On a stable, solid and level surface.
- Between the heat pump and its surroundings (walls, plants, etc.), maintain minimum distances as shown in the diagram below.

## INSTALLATION OF A HORIZONTAL HEAT PUMP

Minimum free area in meter

| A | B | C | D |
|---|---|---|---|
| 0,5 | 0,5 | 0,5 | 2 |

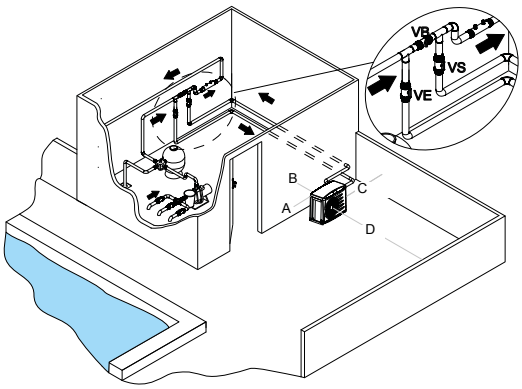


## INSTALLATION OF A VERTICAL HEAT PUMP

Minimum free area in meter

| A | B | C | D | E |
|---|---|---|---|---|
| 0,5 | 0,5 | 0,5 | 0,5 | 2 |
| 0,15* | | | | |

* Only for Z350iQ

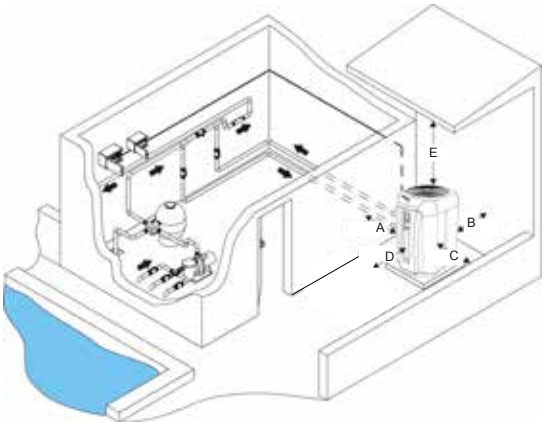


These schemes show the recommended distances for maximum efficiency and ease of maintenance. Alternative installation layout may be considered, with possible impacts on performances and serviceability.

For complete installation instructions, please refer to the user manual.

## > OPTIMIZING THE INSTALLATION OF A HEAT PUMP

A heat pump system includes 'moving' parts (compressor, fan, etc.), vibrations from which can spread and build up.

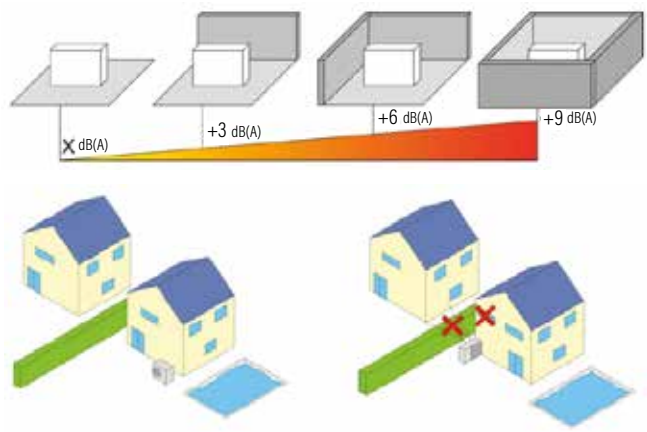


**To avoid or reduce disturbances, a few installation rules should be followed:**

- **Favour open spaces** (avoid corners or interior courtyards), because sound waves coming from all sides of the system are reflected by the surfaces facing them.
- **Do not install the system below or facing a window.**
- **Relative to neighbouring properties:**
  - Install the system as far as possible from property boundaries.
  - The fan should not point towards neighbouring properties.

## > REDUCE TRANSMISSION OF VIBRATIONS THROUGH THE BASE

- Use suitable anti-vibration blocks.
- Renew them if necessary to absorb vibrations, because they lose effectiveness over time.
- Build a mounting base. It should weigh at least twice as much as the heat pump.
- It must be independent from a building.

# > COMPARATIVE TABLE

| | | | | | | | |
|---|---|---|---|---|---|---|---|
| | Range | **Z550iQ** | **Z550iQ R410A** | **Z400iQ** | **Z350iQ** | **Z260iQ** | **Z250iQ** |
| | Claims | The eco-silent choice | The eco-silent choice | Elegant and discrete | Optimal integration | Horizontal R290 Full Inverter | Horizontal Full Inverter |
| | Professional advice recommended | ✓ | ✓ | ✓ | ✓ | ✓ | ✓ |
| Key drivers for a fast pre-selection | Min Air T°C | -15°C | -12°C | -12°C | -7°C | -20°C | -7°C |
| | Seasonality | All year round | All year round | All year round | Extended Season | Extended season | Extended season |
| | Technology | FULL INVERTER | FULL INVERTER | ON-OFF | FULL INVERTER | FULL INVERTER | FULL INVERTER |
| | Cooling mode | ✓ | ✓ | ✓ | ✓ | ✓ | ✓ |
| | App control (wifi) | ✓ (embedded) | ✓ (embedded) | ✓ (embedded) | ✓ (embedded) | ✓ (embedded) | ✓ (embedded) |
| | Air blowing type | Vertical | Vertical | Vertical | Vertical | Horizontal | Horizontal |
| | Free area around the heat pump | +++ | +++ | +++ | +++ | ++ | ++ |
| | Electric power supply | Single-phase and three phase | Single-phase and three phase | Single-phase and three phase | Single-phase | Single-phase | Single-phase and three phase |
| | Can be installed indoor | ✓ | ✓ | x | x | x | x |
| Performances | Range of powers (@26°C Air / 26°C Water) | 12,5kW to 20kW (5 powers) | 12,5kW to 20kW (5 powers) | 9,8 to 22KW (8 powers) | 11, 14, 16kW (3 powers) | 10 to 19,5kW (4 powers) | 7 to 31kW |
| | Range of powers (@15°C Air / 26°C Water) | 9,5 to 15kW (5 powers) | 9,5 to 15kW (5 powers) | 7.9 to 17,5kW (8 powers) | 8, 10, 12 kW (3 powers) | 8 to 15kW | 5.5 to 24kW |
| | Compressor detail | Scroll | Scroll | Rotary vane | Rotary vane | Rotary vane | Rotary vane |
| | Gas type | R32 | R410A | R32/R410A | R32 | R290 | R32 |
| Performances comparison at close powers | Power in kW @26°C | 12,5 kW | 12,5 kW | 12,5 kW | 14 kW | 13 kW | 13 kW |
| | COP @26°C | 12* | 7,6* | 5,2 | 8,8* | 11,2* | 16,4* |
| | Power in kW @15°C | 9,5 kW | 9,5 kW | 10 kW | 10 kW | 10 kW | 9 kW |
| | COP @15°C | 6,7* | 5,7* | 4,4 | 5,4* | 7,3* | 7,8* |
| | Acoustic power (dB) | 64 - 56 | Boost: 62 Silent: 54 | Standard: 65 Silent: 63 | Boost: 71 Silent: 63 | TBC sep 7 | Boost: 65 Silent: 52 |
| | Acoustic pressure (dB) @10m | 33 - 25 | Boost: 31 Silent: 23 | Standard: 34 Silent: 32 | Boost: 40 Silent: 32 | TBC sep 7 | Boost: 34 Silent: 21 |
| Mode | Silence mode | ✓ | ✓ | ✓ | ✓ | ✓ | ✓ |
| | Smart mode | ✓ | ✓ | x | ✓ | ✓ | ✓ |
| | Boost/Standard mode | ✓ | ✓ | ✓ | ✓ | ✓ | ✓ |
| Technical features | Defrosting type | Cycle inversion | Cycle inversion | Cycle inversion | Cycle inversion | Cycle inversion | Cycle inversion |
| | Casing | Polypropylene | Polypropylene | Polypropylene + galvanized steel front panel | Top in polypropylene + galvanized steel for other panels | Galvanized steel | Galvanized steel |
| | OTA (over-the-air firmware update) | ✓ | ✓ | ✓ | ✓ | x | x |
| Ease of use | Heating priority (filtration control) | ✓ | ✓ | ✓ | ✓ | ✓ | ✓ |
| | HMI type | LCD | LCD | LCD | LCD | LCD and touch buttons | LCD and touch buttons |
| Warranty | Heat Pump | 3 years | 3 years | 3 years | 3 years | 3 years | 3 years |
| | Compressor | 5 years | 5 years | 5 years | 5 years | 5 years | 5 years |
| | Condenser (against corrosion) | 10 years | 10 years | 10 years | 10 years | 10 years | 10 years |
| Accessories | Winter cover | ✓ | ✓ | ✓ | ✓ | ✓ | ✓ |
| | Condensate drain kit | ✓ | ✓ | ✓ | ✓ | ✓ | ✓ |
| | Water Connections | 2 x PVC 1/2 union Ø 50 | 2 x PVC 1/2 union Ø 50 | 2 x PVC 1/2 union Ø 50 | • 2 PVC union Ø40<br>• 2 PVC reduction Ø40/50<br>• 2 PVC union 45° Ø50" | 2 x PVC 1/2 union Ø 50 | 2 x PVC 1/2 union Ø 50 |
| | Anti-vibration feet | x4 | x4 | x4 | x4 | x4 | x4 |
| | Remote control kit | ✓ | ✓ | ✓ | ✓ | ✓ | ✓ |
| | Free mobile app | ✓ | ✓ | ✓ | ✓ | ✓ | ✓ |
| | **Optional** | Technical room kit<br>Condensate tray | Technical room kit<br>Condensate tray | x | x | x | x |

* @minimum compressor speed

| | | | | | |
|---|---|---|---|---|---|
| | Range | **Z250** | **POWER FORCE** | **PX50** | **PM40** |
| | Claims | Horizontal Full Inverter | Small to medium public pool | Full Inverter Technology | The silent On-Off solution |
| | Professional advice recommended | ✓ | ✓ | ✓ | ✓ |
| Key drivers for a fast pre-selection | Min Air T°C | -7°C | -12°C | -20°C | -8°C |
| | Seasonality | Extended season | All year round | All year round | Extended Season |
| | Technology | FULL INVERTER | ON-OFF | FULL INVERTER | ON-OFF |
| | Cooling mode | ✓ | ✓ | ✓ | ✓ |
| | App control (wifi) | x | x | ✓ (with optional iQ bridge) | ✓ (with optional iQ bridge) |
| | Air blowing type | Horizontal | Horizontal | Horizontal | Horizontal |
| | Free area around the heat pump | ++ | ++ | ++ | ++ |
| | Electric power supply | Single-phase | Single-phase and three phase | Single-phase and three phase | Single-phase and three phase |
| | Can be installed indoor | x | x | x | x |
| Performances | Range of powers (@26°C Air / 26°C Water) | 7 to 15kW (4 powers) | 33kW and 45,5kW (2 powers) | 9 to 35kW (10 powers) | 4.7 to 32kW (10 powers) |
| | Range of powers (@15°C Air / 26°C Water) | 5,5 to 11kW (4 powers) | 28,7kW and 37kW (2 powers) | 6.3 to 24kW (10 powers) | 3,2 to 23kW (10 powers) |
| | Compressor detail | Rotary vane | Scroll | Rotary vane | Rotary vane or scroll |
| | Gas type | R32 | R410A | R32/R410A | R32/R410A |
| Performances comparison at close powers | Power in kW @26°C | 13 kW | 33 kW | 13,5 kW | 14,7 kW |
| | COP @26°C | 16,4* | 5,4 | 16* | 6,2 |
| | Power in kW @15°C | 9 kW | 28,7 kW | 9,4 kW | 10,5 kW |
| | COP @15°C | 7,8* | 5,1 | 8* | 4,8 |
| | Acoustic power (dB) | Boost: 65<br>Silent: 52 | 70 | Boost: 71<br>Silent: 54 | Standard: 69<br>Silence: 64 |
| | Acoustic pressure (dB) @10m | Boost: 34<br>Silent: 21 | 38 | Boost: 39<br>Silent: 23 | Standard: 38<br>Silence: 33 |
| Mode | Silence mode | ✓ | ✓ | ✓ | ✓ |
| | Smart mode | ✓ | x | ✓ | x |
| | Boost/Standard mode | ✓ | ✓ | ✓ | ✓ |
| Technical features | Defrosting type | Cycle inversion | Cycle inversion | Cycle inversion | Cycle inversion |
| | Casing | Galvanized steel | Galvanized steel, epoxy painted body | Galvanized steel + ABS side panel | Galvanized steel |
| | OTA (over-the-air firmware update) | x | x | x | x |
| Ease of use | Heating priority (filtration control) | ✓ | ✓ | ✓ | ✓ |
| | HMI type | LCD and touch buttons | LCD | LCD display detachable | LCD display detachable |
| Warranty | Heat Pump | 3 years | 3 years | 3 years | 3 years |
| | Compressor | 5 years | 3 years | 5 years | 5 years |
| | Condenser (against corrosion) | 10 years | 5 years | 10 years | 10 years |
| Accessories | Winter cover | ✓ | ✓ | ✓ | ✓ |
| | Condensate drain kit | ✓ | ✓ | ✓ | ✓ |
| | Water Connections | 2 x PVC 1/2 union Ø 50 | 2 x PVC 1/2 union Ø 50 | 2 x PVC 1/2 union Ø 50 | 2 x PVC 1/2 union Ø 50 |
| | Anti-vibration feet | x4 | x4 | x4 | x4 |
| | Remote control kit | x | x | ✓ (10m cable) | ✓ (10m cable) |
| | Free mobile app | x | x | ✓ in option | ✓ in option |
| | **Optional** | | Remote control kit (new display + 20m wire)<br><br>Condensate tray | | |

* @minimum compressor speed

# > COMPARATIVE TABLE

| | | | | | |
|---|---|---|---|---|---|
| | Range | **HPO** | **Z300** | **Z200D** | **Z200** |
| | Claims | Full Inverter Technology | High performance and quiet-certified | Pool heating made simple | Pool heating made simple |
| | Professional advice recommended | ✓ | ✓ | ✓ | ✓ |
| Key drivers for a fast pre-selection | Min Air T°C | -12°C | +5°C | -5°C | +5°C |
| | Seasonality | All year round | Season | Extended season | Season |
| | Technology | FULL INVERTER | ON-OFF | ON-OFF | ON-OFF |
| | Cooling mode | ✓ | x | x | x |
| | App control (wifi) | ✓ (with optional iQ bridge) | x | x | x |
| | Air blowing type | Horizontal | Horizontal | Horizontal | Horizontal |
| | Free area around the heat pump | ++ | ++ | ++ | ++ |
| | Electric power supply | Single-phase | Single-phase and three phase | Single-phase | Single-phase |
| | Can be installed indoor | x | ✓ | x | x |
| Performances | Range of powers (@26°C Air / 26°C Water) | 9 to 25kW (6 powers) | 9W to 16.1kW (4 powers) | 6.7kW to 14.8kW (4 powers) | 6.7kW to 14.8kW (4 powers) |
| | Range of powers (@15°C Air / 26°C Water) | 6.3 to 17.7kW (6 powers) | 7.6W to 13.7kW 4 powers) | 4.8kW to 10.1kW (4 powers) | 4.8kW to 10.1kW (4 powers) |
| | Compressor detail | Scroll | Rotary vane | Rotary vane | Rotary vane |
| | Gas type | R32 | R410A | R32 | R32 |
| Performances comparison at close powers | Power in kW @26°C | 13,5 kW | 13 kW | 14,8 kW | 14,8 kW |
| | COP @26°C | 16* | 5,5 | 4,6 | 4,6 |
| | Power in kW @15°C | 9,4 kW | 10,4 kW | 10,1 kW | 10,1 kW |
| | COP @15°C | 8* | 4,7 | 4 | 4 |
| | Acoustic power (dB) | Boost: 71 Silent: 54 | 68 | 72 | 72 |
| | Acoustic pressure (dB) @10m | Boost: 39 Silent: 23 | 37 | 41 | 41 |
| Mode | Silence mode | ✓ | x | x | x |
| | Smart mode | ✓ | x | x | x |
| | Boost/Standard mode | ✓ | ✓ | ✓ | ✓ |
| Technical features | Defrosting type | Cycle inversion | Forced ventilation | Cycle inversion | Forced ventilation |
| | Casing | Galvanized steel | Polypropylene | Polypropylene | Polypropylene |
| | OTA (over-the-air firmware update) | x | x | x | x |
| Ease of use | Heating priority (filtration control) | ✓ | ✓ | ✓ | ✓ |
| | HMI type | LCD display detachable | LCD | LCD | LCD |
| Warranty | Heat Pump | 3 years | 3 years | 3 years | 3 years |
| | Compressor | 5 years | 5 years | 5 years | 5 years |
| | Condenser (against corrosion) | 10 years | 10 years | 10 years | 10 years |
| Included Accessories | Winter cover | ✓ | ✓ | ✓ | ✓ |
| | Condensate drain kit | ✓ | ✓ | ✓ | ✓ |
| | Water Connections | 2 x PVC 1/2 union Ø 50 | 2 x PVC 1/2 union Ø 50 | 2 x PVC 1/2 union Ø 50 | 2 x PVC 1/2 union Ø 50 |
| | Anti-vibration feet | x 4 | x 4 | x 4 | x 4 |
| | Remote control kit | Remote control kit (10m cable) | | | |
| | 10m Modbus Signal wire | (to connect the Heat Pump to the Connect Box). | | | |
| | Free mobile app | ✓ | | | |
| | **Optional** | 1 x remote display kit (new display + 10m wire). | Remote control kit (new display + 20m wire)<br>Wall mounting kit<br>Technical room kit<br>Condensate tray | Remote control kit (new display + 20m wire)<br>Wall mounting kit | |

* @minimum compressor speed

# > CLIMATE ZONES

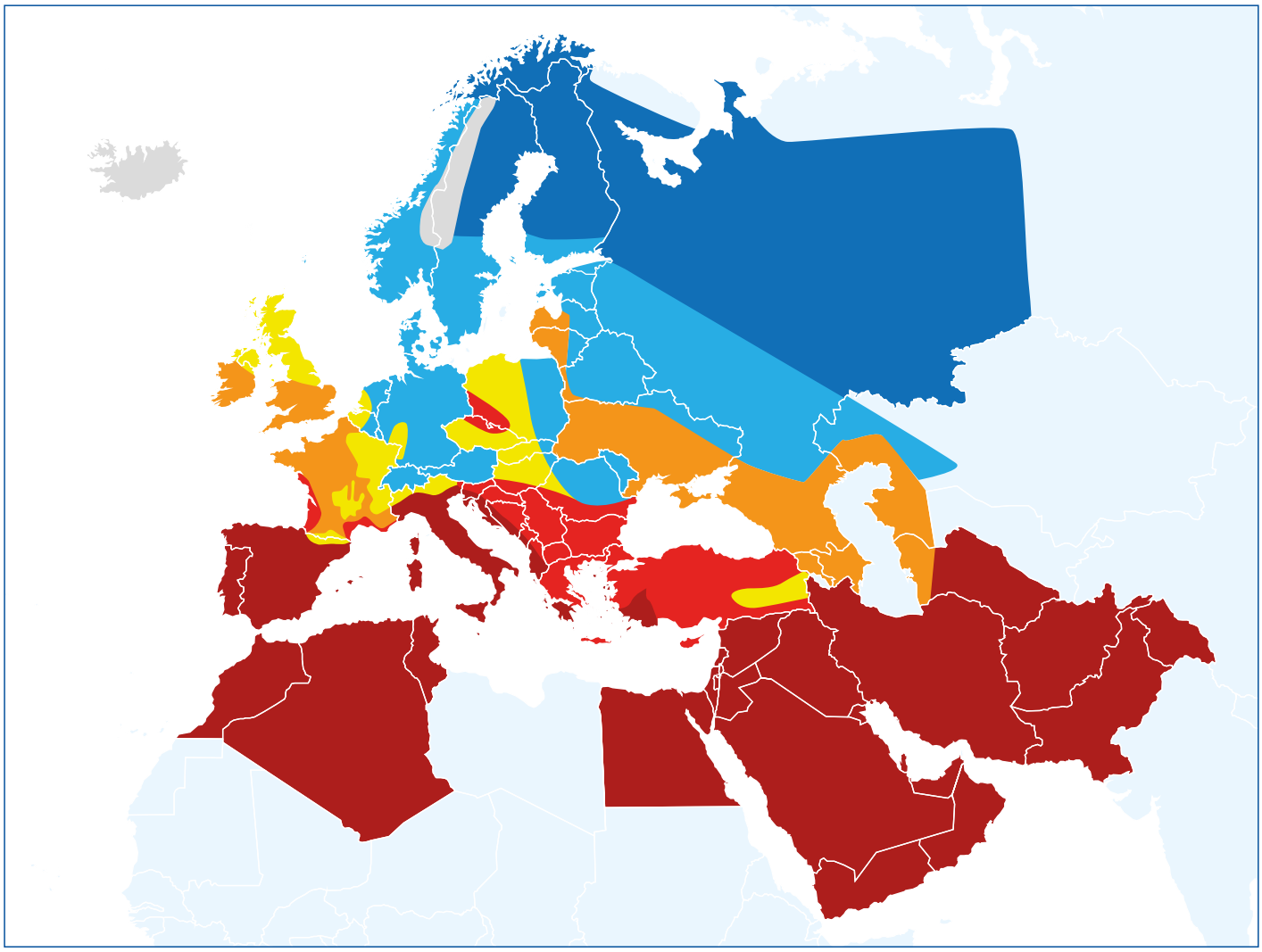

| | |
|---|---|
| Zone 1 | |
| Zone 2 | |
| Zone 3 | |
| Zone 4 | |
| Zone 5 | |
| Zone 6 | |
| Zone 7 | |



## HEAT PUMPS SELECTION GUIDE

This quick selection guide has been configured with the following parameters: private pool, for a use from beginning of may to end of september, average depth 1.5m, 14h filtration time, target pool water temperature 28°C.

**SELECT THE POWER IN LESS THAN 1 MINUTE**

How to read: For a 35m³ pool, with cover, located in zone 2, a Z250iQ MD5 is needed.

ZODIAC®

# 2024 Ranges WITH COVER

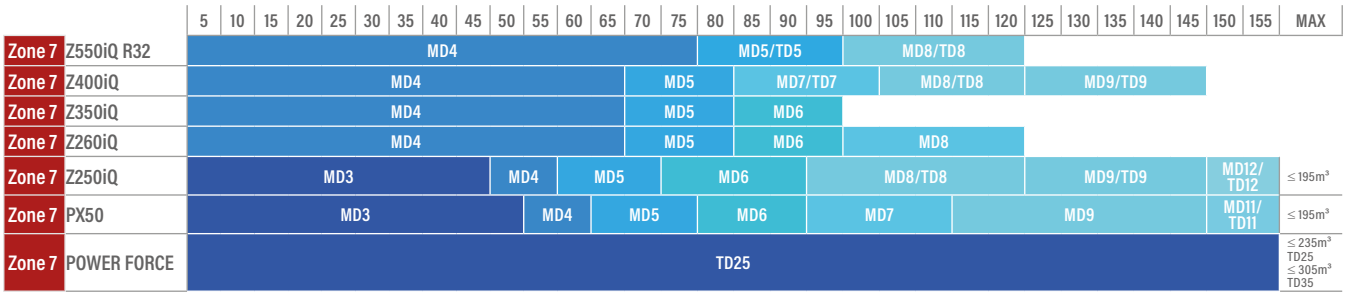


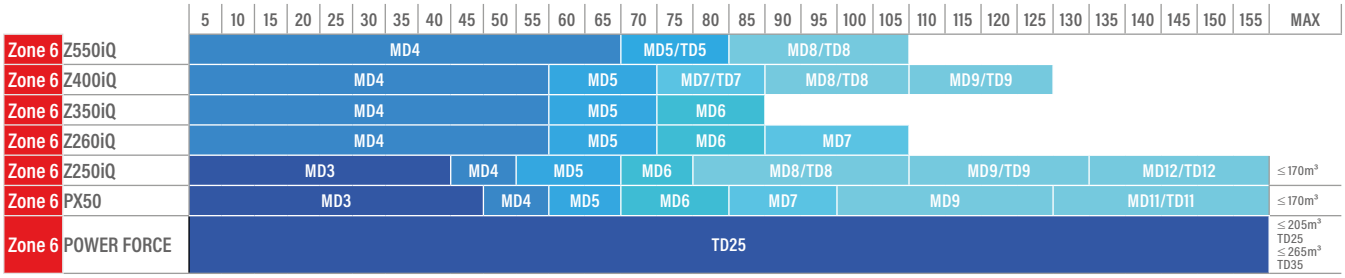


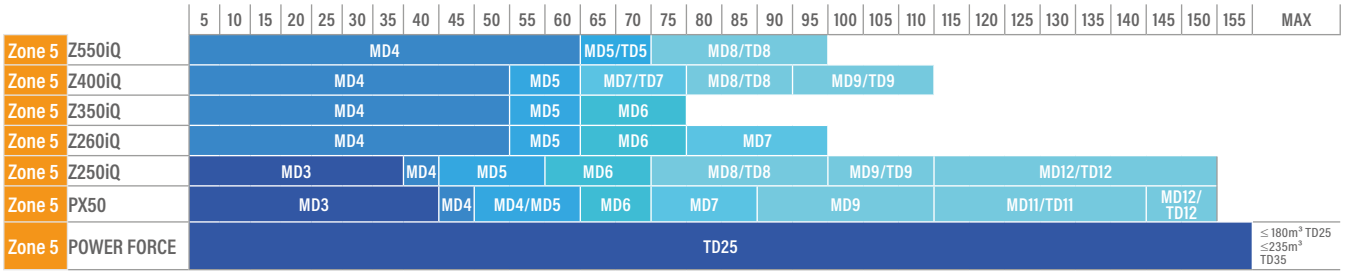


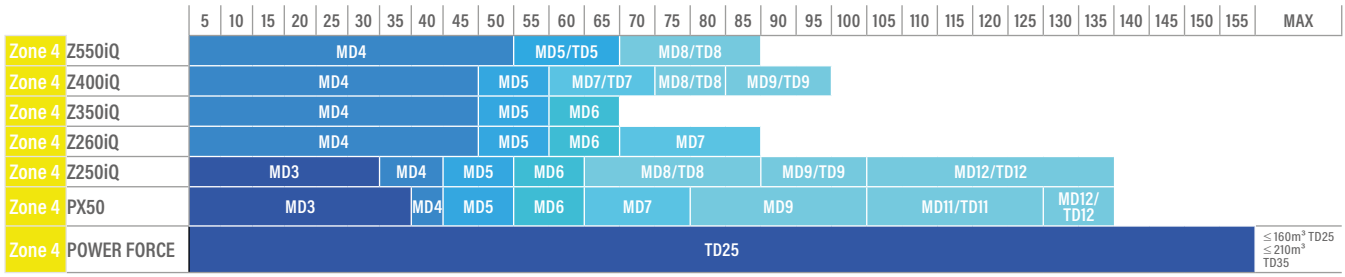


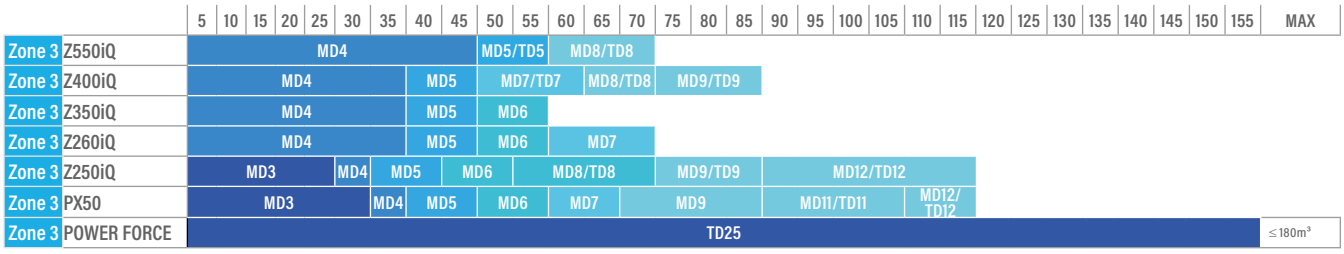


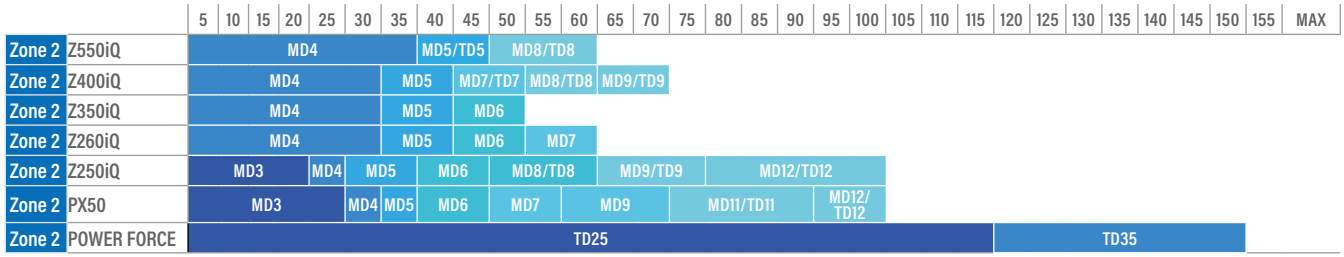


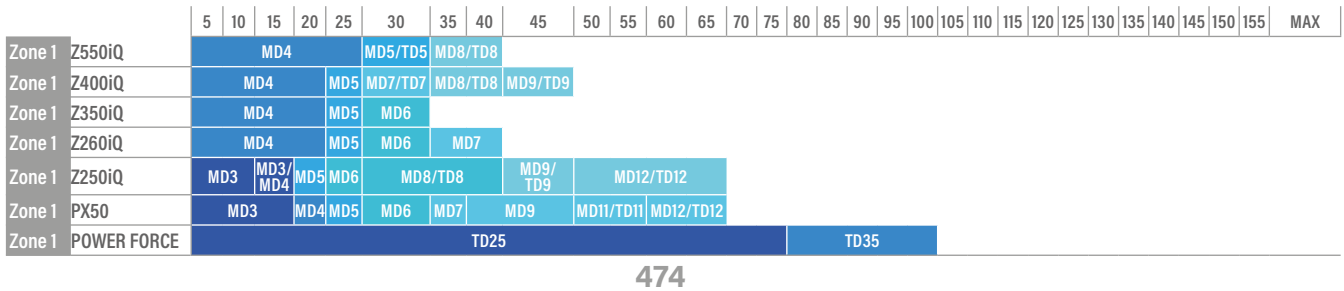


HEATING AND COOLING

# 2024 Ranges WITHOUT COVER

| | | 5 | 10 | 15 | 20 | 25 | 30 | 35 | 40 | 45 | 50 | 55 | 60 | 65 | 70 | 75 | 80 | 85 | 90 | 95 | 100 | 105 | 110 | 115 | 120 | 125 | 130 | 135 | 140 | 145 | 150 | 155 | MAX |
|---|---|---|---|---|---|---|---|---|---|---|---|---|---|---|---|---|---|---|---|---|---|---|---|---|---|---|---|---|---|---|---|---|---|
| Zone 7 | Z550iQ | MD4 | | | | | | | MD5/TD5 | | MD8/TD8 | | | | | | | | | | | | | | | | | | | | | | |
| Zone 7 | Z400iQ | MD4 | | | | | | MD5 | | MD7/TD7 | | MD8/TD8 | | MD9/TD9 | | | | | | | | | | | | | | | | | | | |
| Zone 7 | Z350iQ | MD4 | | | | | | MD5 | | MD6 | | | | | | | | | | | | | | | | | | | | | | | |
| Zone 7 | Z260iQ | MD4 | | | | | | MD5 | | MD6 | | MD7 | | | | | | | | | | | | | | | | | | | | | |
| Zone 7 | Z250iQ | MD3 | | | | MD4 | | MD5 | | MD6 | | MD8/TD8 | | MD9/TD9 | | | MD12/TD12 | | | | | | | | | | | | | | | | |
| Zone 7 | PX50 | MD3 | | | | | MD4 | MD5 | | MD6 | | MD7 | | MD9 | | | MD11/D11 | | | MD12/ TD12 | | | | | | | | | | | | | |
| Zone 7 | POWER FORCE | TD25 | | | | | | | | | | | | | | | | | | | | | | | TD35 | | | | | | | | |

| | | 5 | 10 | 15 | 20 | 25 | 30 | 35 | 40 | 45 | 50 | 55 | 60 | 65 | 70 | 75 | 80 | 85 | 90 | 95 | 100 | 105 | 110 | 115 | 120 | 125 | 130 | 135 | 140 | 145 | 150 | 155 | MAX |
|---|---|---|---|---|---|---|---|---|---|---|---|---|---|---|---|---|---|---|---|---|---|---|---|---|---|---|---|---|---|---|---|---|---|
| Zone 6 | Z550iQ | MD4 | | | | | | MD5/TD5 | | MD8/TD8 | | | | | | | | | | | | | | | | | | | | | | | |
| Zone 6 | Z400iQ | MD4 | | | | | MD5 | | MD7/TD7 | | MD8/ TD8 | | MD9/TD9 | | | | | | | | | | | | | | | | | | | | |
| Zone 6 | Z350iQ | MD4 | | | | | MD5 | | MD6 | | | | | | | | | | | | | | | | | | | | | | | | |
| Zone 6 | Z260iQ | MD4 | | | | | MD5 | | MD6 | | MD7 | | | | | | | | | | | | | | | | | | | | | | |
| Zone 6 | Z250iQ | MD3 | | | MD4 | | MD5 | | MD6 | | MD8/TD8 | | MD9/TD9 | | | MD12/TD12 | | | | | | | | | | | | | | | | | |
| Zone 6 | PX50 | MD3 | | | | MD4 | MD5 | | MD6 | | MD7 | | MD9 | | | MD11/TD11 | | | MD12/ TD12 | | | | | | | | | | | | | | |
| Zone 6 | POWER FORCE | TD25 | | | | | | | | | | | | | | | | | | | | TD35 | | | | | | | | | | | |

| | | 5 | 10 | 15 | 20 | 25 | 30 | 35 | 40 | 45 | 50 | 55 | 60 | 65 | 70 | 75 | 80 | 85 | 90 | 95 | 100 | 105 | 110 | 115 | 120 | 125 | 130 | 135 | 140 | 145 | 150 | 155 | MAX |
|---|---|---|---|---|---|---|---|---|---|---|---|---|---|---|---|---|---|---|---|---|---|---|---|---|---|---|---|---|---|---|---|---|---|
| Zone 5 | Z550iQ | MD4 | | | | | | MD5/ TD5 | | MD8/TD8 | | | | | | | | | | | | | | | | | | | | | | | |
| Zone 5 | Z400iQ | MD4 | | | | | MD5 | | MD7/ TD7 | | MD8/TD8 | | MD9/TD9 | | | | | | | | | | | | | | | | | | | | |
| Zone 5 | Z350iQ | MD4 | | | | | MD5 | | MD6 | | | | | | | | | | | | | | | | | | | | | | | | |
| Zone 5 | Z260iQ | MD4 | | | | | MD5 | | MD6 | | MD7 | | | | | | | | | | | | | | | | | | | | | | |
| Zone 5 | Z250iQ | MD3 | | | | MD4 | MD5 | | MD6 | | MD8/TD8 | | MD9/TD9 | | | MD12/TD12 | | | | | | | | | | | | | | | | | |
| Zone 5 | PX50 | MD3 | | | | | MD5 | | MD6 | MD7 | | MD9 | | | MD11/TD11 | | | MD12/ TD12 | | | | | | | | | | | | | | | |
| Zone 5 | POWER FORCE | TD25 | | | | | | | | | | | | | | | | | | TD35 | | | | | | | | | | | | | |

| | | 5 | 10 | 15 | 20 | 25 | 30 | 35 | 40 | 45 | 50 | 55 | 60 | 65 | 70 | 75 | 80 | 85 | 90 | 95 | 100 | 105 | 110 | 115 | 120 | 125 | 130 | 135 | 140 | 145 | 150 | 155 | MAX |
|---|---|---|---|---|---|---|---|---|---|---|---|---|---|---|---|---|---|---|---|---|---|---|---|---|---|---|---|---|---|---|---|---|---|
| Zone 4 | Z550iQ | MD4 | | | | | MD5/ TD5 | | MD8/TD8 | | | | | | | | | | | | | | | | | | | | | | | | |
| Zone 4 | Z400iQ | MD4 | | | | MD5 | | MD7/TD7 | | MD8/ TD8 | MD9/ TD9 | | | | | | | | | | | | | | | | | | | | | | |
| Zone 4 | Z350iQ | MD4 | | | | MD5 | MD6 | | | | | | | | | | | | | | | | | | | | | | | | | | |
| Zone 4 | Z260iQ | MD4 | | | | MD5 | MD6 | | MD7 | | | | | | | | | | | | | | | | | | | | | | | | |
| Zone 4 | Z250iQ | MD3 | | | MD4 | MD5 | MD6 | | MD8/ TD8 | | MD9/ TD9 | | MD12/ TD12 | | | | | | | | | | | | | | | | | | | | |
| Zone 4 | PX50 | MD3 | | | MD4 | MD5 | MD6 | MD7 | | MD9 | | | MD11/ TD11 | | MD12/ TD12 | | | | | | | | | | | | | | | | | | |
| Zone 4 | POWER FORCE | TD25 | | | | | | | | | | | | | | | | TD35 | | | | | | | | | | | | | | | |

| | | 5 | 10 | 15 | 20 | 25 | 30 | 35 | 40 | 45 | 50 | 55 | 60 | 65 | 70 | 75 | 80 | 85 | 90 | 95 | 100 | 105 | 110 | 115 | 120 | 125 | 130 | 135 | 140 | 145 | 150 | 155 | MAX |
|---|---|---|---|---|---|---|---|---|---|---|---|---|---|---|---|---|---|---|---|---|---|---|---|---|---|---|---|---|---|---|---|---|---|
| Zone 3 | Z550iQ | MD4 | | | | MD5/ TD5 | | MD8/ TD8 | | | | | | | | | | | | | | | | | | | | | | | | | |
| Zone 3 | Z400iQ | MD4 | | | MD5 | | MD7/ TD7 | | MD8/ TD8 | MD9/ TD9 | | | | | | | | | | | | | | | | | | | | | | | |
| Zone 3 | Z350iQ | MD4 | | | MD5 | MD6 | | | | | | | | | | | | | | | | | | | | | | | | | | | |
| Zone 3 | Z260iQ | MD4 | | | MD5 | MD6 | | MD7 | | | | | | | | | | | | | | | | | | | | | | | | | |
| Zone 3 | Z250iQ | MD3 | | MD4 | MD5 | MD6 | | MD8/ TD8 | | MD9/ TD9 | | MD12/ TD12 | | | | | | | | | | | | | | | | | | | | | |
| Zone 3 | PX50 | MD3 | | MD3/ MD4 | MD5 | MD6 | MD7 | | MD9 | | | MD11/ TD11 | | MD12/ TD12 | | | | | | | | | | | | | | | | | | | |
| Zone 3 | POWER FORCE | TD25 | | | | | | | | | | | | | | | TD35 | | | | | | | | | | | | | | | | |

| | | 5 | 10 | 15 | 20 | 25 | 30 | 35 | 40 | 45 | 50 | 55 | 60 | 65 | 70 | 75 | 80 | 85 | 90 | 95 | 100 | 105 | 110 | 115 | 120 | 125 | 130 | 135 | 140 | 145 | 150 | 155 | MAX |
|---|---|---|---|---|---|---|---|---|---|---|---|---|---|---|---|---|---|---|---|---|---|---|---|---|---|---|---|---|---|---|---|---|---|
| Zone 2 | Z550iQ | MD4 | | | | MD5/TD5 | | MD8/TD8 | | | | | | | | | | | | | | | | | | | | | | | | | |
| Zone 2 | Z400iQ | MD4 | | | | MD5 | | MD7/ TD7 | MD8/ TD8 | MD9/ TD9 | | | | | | | | | | | | | | | | | | | | | | | |
| Zone 2 | Z350iQ | MD4 | | | | MD5 | | MD6 | | | | | | | | | | | | | | | | | | | | | | | | | |
| Zone 2 | Z260iQ | MD4 | | | | MD5 | | MD6 | MD8 | | | | | | | | | | | | | | | | | | | | | | | | |
| Zone 2 | Z250iQ | MD3 | MD3/ MD4 | | MD5 | MD6 | | MD8/TD8 | | MD9/ TD9 | | MD12/TD12 | | | | | | | | | | | | | | | | | | | | | |
| Zone 2 | PX50 | MD3 | | | MD4/ MD5 | MD6 | | MD7 | | MD9 | | MD11/TD11 | | MD12/ TD12 | | | | | | | | | | | | | | | | | | | |
| Zone 2 | POWER FORCE | TD25 | | | | | | | | | | | | | | TD35 | | | | | | | | | | | | | | | | | |

| | | 5 | 10 | 15 | 20 | 25 | 30 | 35 | 40 | 45 | 50 | 55 | 60 | 65 | 70 | 75 | 80 | 85 | 90 | 95 | 100 | 105 | 110 | 115 | 120 | 125 | 130 | 135 | 140 | 145 | 150 | 155 | MAX |
|---|---|---|---|---|---|---|---|---|---|---|---|---|---|---|---|---|---|---|---|---|---|---|---|---|---|---|---|---|---|---|---|---|---|
| Zone 1 | Z550iQ | MD4 | | | MD5/TD5 | MD8/TD8 | | | | | | | | | | | | | | | | | | | | | | | | | | | |
| Zone 1 | Z400iQ | MD4 | MD4/MD5 | | MD7/TD7 | MD8/TD8 MD9/TD9 | | | | | | | | | | | | | | | | | | | | | | | | | | | |
| Zone 1 | Z350iQ | MD4 | | | MD6 | | | | | | | | | | | | | | | | | | | | | | | | | | | | |
| Zone 1 | Z260iQ | MD4 | | | MD6 | MD7 | | | | | | | | | | | | | | | | | | | | | | | | | | | |
| Zone 1 | Z250iQ | MD3/ MD4 | MD5 | | MD6 | MD8/ TD8 | | MD12/ TD12 | | | | | | | | | | | | | | | | | | | | | | | | | |
| Zone 1 | PX50 | MD3 | MD4/MD5 | | MD6 | MD9 | | MD11/ TD11 | MD12/ TD12 | | | | | | | | | | | | | | | | | | | | | | | | |
| Zone 1 | POWER FORCE | TD25 | | | | | | | | TD35 | | | | | | | | | | | | | | | | | | | | | | | |

ZODIAC®

HEAT PUMPS

# Z550iQ

- **Full inverter technology: silent and energy saving**
- **Fits easily into small spaces**
- **Embedded connectivity: Free mobile Fluidra Pool app**

3 YEAR WARRANTY · MADE IN ITALY · FULL INVERTER · -15°C MIN. TEMP. AIR · HEATING & COOLING · FLUIDRA POOL · ENERGY EFFICIENT · TECHNICAL ROOM KIT

## DESCRIPTION

- Vertical Blowing
- Full Inverter Technology with 3 operating modes :
- Boost: Maximum power for quick heating at the beginning of the season
- Smart: Automatic power adjustment between Ecosilence and Boost
- Ecosilence: Greater energy savings and lower noise level
- Embedded connectivity with free mobile app
- Polypropylene body
- Heating priority mode (filtration pump control)
- Automatic defrosting
- Titanium water exchanger, compatible with salt water treatment
- Scroll compressor
- LCD Display

## ACCESSORIES INCLUDED

- Winter cover
- Condensate drain kit
- 2 x PVC 1/2 union Ø 50
- 4 x Anti-vibration feet

## OPTIONAL ACCESSORIES

- Cleaning kit HP - WMA03491
- Z550iQ - Technical Room Kit - WH000202
- Z550iQ - Condensate tray - R07240

## TECHNICAL FEATURES

| Name | Z550iQ MD4 | Z550iQ MD5 | Z550iQ MD8 | Z550iQ TD5 | Z550iQ TD8 |
|---|---|---|---|---|---|
| Sku Reference | WH000519 | WH000520 | WH000522 | WH000521 | WH000523 |
| EN 17645 Rating | A | A | A | A | A |
| EN 17645 SCOP | 8,1 | 8,1 | 7 | 8,1 | 7 |
| Recommended water flow (m³/h) | 4 | 5 | 6 | 5 | 6 |
| Electric Power Supply | 220-240 V / 1 / 50-60 Hz | | | 380-400 V / 3 / 50-60 Hz | |
| Nominal operating power (A) | 9 - 1,7 | 11 - 2,4 | 17,8 - 3,5 | 4 - 1 | 6,1 - 1,4 |
| Maximum operating power (A) | 9 | 11 | 17,8 | 4 | 6,1 |
| Recommended Power cable size (mm²)* | 3 x 2,5 | 3 x 2,5 | 3 x 6 | 5 x 2,5 | 5 x 2,5 |
| Refrigerant fluid | R32 | R32 | R32 | R32 | R32 |
| Refrigerant fluid quantity (kg) | 0,88 | 1,2 | 2,18 | 1,2 | 2,18 |
| Acoustic Power (max-min) (dBA)** | 64 - 56 | 65 - 56 | 68 - 56 | 66 - 56 | 68 - 56 |
| Acoustic pressure at 10m (max-min) (dBA)** | 33 - 25 | 34 - 25 | 37 - 25 | 35 - 24 | 37 - 25 |

## HEATING PERFORMANCE

### AIR 26°C / WATER 26°C / HUMID. 80%

| | | | | | |
|---|---|---|---|---|---|
| Operating Power (max-min) (kW) | 12,5 - 3,6 | 15 - 3,6 | 20 - 7 | 15,5 - 4,2 | 20 - 6,2 |
| Consumed Power (max-min) (kW) | 2 - 0,3 | 2,5 - 0,3 | 4,1 - 0,7 | 2,5 - 0,35 | 4 - 0,6 |
| COP | 6,3 - 12 | 5,9 -12 | 4,9 - 10,3 | 6,1 - 12,1 | 5 - 10,4 |

### AIR 15°C / WATER 26°C / HUMID. 70%

| | | | | | |
|---|---|---|---|---|---|
| Operating Power (max-min) (kW) | 9,5 - 2,6 | 11,5 - 2,7 | 15 - 3,8 | 11,5 - 2,8 | 15 - 2,9 |
| Consumed Power (max-min) (kW) | 1,9 - 0,4 | 2,4 - 0,4 | 3,7 - 0,8 | 2,3 - 0,4 | 3,6 - 0,5 |
| COP | 5 - 6,7 | 4,8 - 6,8 | 4,1 - 5 | 5,1 - 7,1 | 4,2 - 5,8 |

## DIMENSIONS AND WEIGHTS

| | | | | | |
|---|---|---|---|---|---|
| Product Dimensions (Length x Height x Depth) (mm) | 615 x 997 x 706mm | 615 x 997 x 706mm | 615 x 997 x 706mm | 615 x 997 x 706mm | 615 x 997 x 706mm |
| Product Weight (kg) | 54kg | 60kg | 70kg | 60kg | 70kg |

*Cable not provided. Recommended section for maximum length of 20m.
**According to EN60704-1:2010+A11:2012 standard

HEAT PUMPS

# Z550iQ - R410A

Available until end of stock

- + Full Inverter technology: silent and energy saving
- + Fits easily into small spaces
- + Embedded connectivity: Free mobile iAqualink app

3 YEAR WARRANTY · MADE IN ITALY · FULL INVERTER · -12°C MIN. TEMP. AIR · HEATING & COOLING · ENERGY EFFICIENT · TECHNICAL ROOM KIT · iAquaLink CONTROL

## DESCRIPTION

- Vertical Blowing
- Full Inverter Technology with 3 operating modes :
- Boost: Maximum power for quick heating at the beginning of the season
- Smart: Automatic power adjustment between Ecosilence and Boost
- Ecosilence: Greater energy savings and lower noise level
- Embedded connectivity with free mobile app
- Polypropylene body
- Heating priority mode (filtration pump control)
- Automatic defrosting
- Titanium water exchanger, compatible with salt water treatment
- Scroll compressor
- LCD Display

## ACCESSORIES INCLUDED

- Winter Cover
- Condensate drain kit
- 2 x PVC 1/2 union Ø 50
- 4 x Anti-vibration feet

## OPTIONAL ACCESSORIES

- Cleaning kit HP - WMA03491
- Z550iQ - Technical Room Kit - WH000202
- Z550iQ - Condensate tray - R07240

## TECHNICAL FEATURES

| Name | Z550iQ MD4 | Z550iQ MD5 | Z550iQ MD8 | Z550iQ TD5 | Z550iQ TD8 |
|---|---|---|---|---|---|
| Sku Reference | WH000365 | WH000366 | WH000368 | WH000367 | WH000369 |
| EN 17645 Rating | B | B | C | A | B |
| EN 17645 SCOP | 6,1 | 6 | 5,3 | 7,6 | 6 |
| Recommended water flow (m³/h) | 4 | 5 | 6 | 5 | 6 |
| Electric Power Supply | 220-240 V / 1 / 50-60 Hz | | | 380-400 V / 3 / 50-60 Hz | |
| Nominal operating power (A) | 9,6 - 5 | 12 - 4,9 | 17,6 - 7,5 | 5,9 - 1,6 | 6 - 3,5 |
| Maximum operating power (A) | 12,5 | 13,8 | 20 | 6 | 8 |
| Recommended Power cable size (mm²)* | 3 x 2,5 | 3 x 2,5 | 3 x 6 | 5 x 2,5 | 5 x 2,5 |
| Refrigerant fluid | R410A | R410A | R410A | R410A | R410A |
| Refrigerant fluid quantity (kg) | 1,3 | 1,5 | 2,4 | 1,5 | 2,6 |
| Acoustic Power (max-min) (dBA)** | 62 - 54 | 66 - 57 | 67 - 53 | 66 - 56 | 67 - 57 |
| Acoustic pressure at 10m (max-min) (dBA)** | 31 - 23 | 35 - 26 | 36 - 22 | 35 - 25 | 36 - 26 |

## HEATING PERFORMANCE

### AIR 26°C / WATER 26°C / HUMID. 80%

| | | | | | |
|---|---|---|---|---|---|
| Operating Power (max-min) (kW) | 12,5 - 7,9 | 15 - 7,6 | 20 - 10,8 | 15,5 - 7,1 | 20 - 11,2 |
| Consumed Power (max-min) (kW) | 2 - 1,05 | 2,5 - 1,05 | 3,6 - 1,55 | 2,4 - 0,65 | 3,5 - 1,55 |
| COP | 6,1 - 7,6 | 5,9 -7,4 | 5,5 - 7 | 6,6 - 10,9 | 5,8 - 7,7 |

### AIR 15°C / WATER 26°C / HUMID. 70%

| | | | | | |
|---|---|---|---|---|---|
| Operating Power (max-min) (kW) | 9,5 - 5,5 | 11,5 - 5,8 | 15 - 7,8 | 11,5 - 5,8 | 15 - 8,2 |
| Consumed Power (max-min) (kW) | 1,9 - 0,95 | 2,5 - 1,1 | 3,7 - 1,65 | 2,4 - 0,8 | 3,1 - 1,4 |
| COP | 4,9 - 5,7 | 4,6 - 5,4 | 4,1 - 4,8 | 4,9 - 7,2 | 4,9 - 6 |

## DIMENSIONS AND WEIGHTS

| | | | | | |
|---|---|---|---|---|---|
| Product Dimensions (Length x Height x Depth) (mm) | 615 x 997 x 706mm | 615 x 997 x 706mm | 615 x 997 x 706mm | 615 x 997 x 706mm | 615 x 997 x 706mm |
| Product Weight (kg) | 54kg | 60kg | 70kg | 60kg | 70kg |

*Cable not provided. Recommended section for maximum length of 20m.
**According to EN60704-1:2010+A11:2012 standard

ZODIAC®

HEAT PUMPS

# Z400iQ

+ Unique Design
+ Quiet & Discrete
+ Embedded connectivity: Free mobile iAqualink app

3 YEAR WARRANTY

MADE IN ITALY

ON/OFF +

-12°C MIN. TEMP. AIR

HEATING & COOLING

iAquaLink CONTROL

## DESCRIPTION

- Vertical Blowing
- ON/OFF technology with 2-speed fan and 2 operating modes: Standard, Silence (for noise reduction)
- Embedded connectivity with free mobile app
- Polypropylene and galvanized steel, epoxy painted (body) or pre-painted (front panel)
- Heating priority mode (filtration pump control)
- Automatic defrosting
- Titanium water exchanger, compatible with salt water treatment
- Rotary vane compressor
- LCD Display

## ACCESSORIES INCLUDED

- Winter Cover
- Condensate drain kit
- 2 x PVC 1/2 union Ø 50
- 4 x Anti-vibration feet

## OPTIONAL ACCESSORIES

- Cleaning kit HP - WMA03491

## TECHNICAL FEATURES

| Name | Z400iQ MD4 | Z400iQ MD5 | Z400iQ MD7 | Z400iQ MD8 | Z400iQ MD9 | Z400iQ TD7 | Z400iQ TD8 | Z400iQ TD9 |
|---|---|---|---|---|---|---|---|---|
| Sku Reference | WH000382 | WH000383 | WH000291 | WH000295 | WH000299 | WH000385 | WH000387 | WH000389 |
| EN 17645 Rating | C | C | C | C | C | C | C | C |
| EN 17645 SCOP | 5,2 | 4,6 | 4,3 | 4,2 | 4 | 4,3 | 4,5 | 4,2 |
| Recommended water flow (m³/h) | 4 | 5 | 6 | 7 | 8 | 6 | 7 | 8 |
| Electric Power Supply | 220-240 V / 1 / 50 Hz | | | | | 380-400 V / 3 / 50 Hz | | |
| Nominal operating power (A) | 6,9 | 10,1 | 13,4 | 17 | 19,4 | 6,1 | 7,7 | 8,5 |
| Maximum operating power (A) | 10 | 15 | 19 | 28 | 32 | 6,4 | 9,2 | 11,4 |
| Recommended Power cable size (mm²)* | 3 x 2,5 | 3 x 2,5 | 3 x 2,5 | 3 x 6 | 3 x 6 | 5 x 2,5 | 5 x 2,5 | 5 x 2,5 |
| Refrigerant fluid | R32 | R32 | R410A | R410A | R410A | R32 | R32 | R32 |
| Refrigerant fluid quantity (kg) | 0,87 | 0,99 | 1,45 | 1,8 | 1,8 | 1,18 | 1,59 | 1,59 |
| Acoustic Power (max-min) (dBA)** | 64 / 61 | 65 / 63 | 66 / 63 | 64 / 61 | 64 / 62 | 68 / 66 | 65 / 62 | 66 / 63 |
| Acoustic pressure at 10m (max-min) (dBA)** | 33 / 30 | 34 / 32 | 35 / 32 | 33 / 30 | 33 / 31 | 37 / 35 | 34/ 31 | 35 / 32 |

## HEATING PERFORMANCE

### AIR 26°C / WATER 26°C / HUMID. 80%

| | | | | | | | | |
|---|---|---|---|---|---|---|---|---|
| Operating Power (max-min) (kW) | 9,8 | 12,5 | 15,6 | 18,6 | 22 | 15,6 | 18,6 | 22 |
| Consumed Power (max-min) (kW) | 1,7 | 2,3 | 3,2 | 3,8 | 4,5 | 3 | 3,5 | 4,2 |
| COP | 5,9 | 5,2 | 4,9 | 4,9 | 4,9 | 5,2 | 5,3 | 5,2 |

### AIR 15°C / WATER 26°C / HUMID. 70%

| | | | | | | | | |
|---|---|---|---|---|---|---|---|---|
| Operating Power (max-min) (kW) | 7,9 | 10 | 12,4 | 14,8 | 17,5 | 12,4 | 14,8 | 17,5 |
| Consumed Power (max-min) (kW) | 1,6 | 2,2 | 2,9 | 3,5 | 4,2 | 2,9 | 3,5 | 4,1 |
| COP | 4,9 | 4,4 | 4,2 | 4,2 | 4,2 | 4,3 | 4,2 | 4,3 |

## DIMENSIONS AND WEIGHTS

| | | | | | | | | |
|---|---|---|---|---|---|---|---|---|
| Product Dimensions (Length x Height x Depth) (mm) | 1030 x 872 x 449mm | 1030 x 872 x 449mm | 1030 x 872 x 449mm | 1145 x 1018 x 480mm | 1145 x 1018 x 480mm | 1030 x 872 x 449mm | 1145 x 1018 x 480mm | 1145 x 1018 x 480mm |
| Product Weight (kg) | 70kg | 71kg | 90kg | 105kg | 110kg | 94kg | 105kg | 110kg |

*Cable not provided. Recommended section for maximum length of 20m.
**According to EN60704-1:2010+A11:2012 standard

HEAT PUMPS

# Z400iQ Stainless

Available until end of stock

- **+ Unique Design**
- **+ Quiet & Discrete**
- **+ Embedded connectivity: Free mobile iAqualink app**

3 YEAR WARRANTY · MADE IN ITALY · ON/OFF + · -12°C MIN. TEMP. AIR · HEATING & COOLING · iAquaLink CONTROL

## DESCRIPTION

- Vertical Blowing
- ON/OFF technology with 2-speed fan and 2 operating modes: Standard, Silence (for noise reduction)
- Embedded connectivity with free mobile app
- Polypropylene and galvanized steel, epoxy painted (body). 316L Stainless Steel front panel
- Heating priority mode (filtration pump control)
- Automatic defrosting
- Titanium water exchanger, compatible with salt water treatment
- Rotary vane compressor
- LCD Display

## ACCESSORIES INCLUDED

- Winter Cover
- Condensate drain kit
- 2 x PVC 1/2 union Ø 50
- 4 x Anti-vibration feet

## OPTIONAL ACCESSORIES

- Cleaning kit HP - WMA03491

## TECHNICAL FEATURES

| Name | Z400iQ MD4 S | Z400iQ MD5 S | Z400iQ MD7 S | Z400iQ MD8 S | Z400iQ MD9 S | Z400IQ TD7 S | Z400iQ TD8 S | Z400iQ TD9 S |
|---|---|---|---|---|---|---|---|---|
| Sku Reference | WH000398 | WH000399 | WH000357 | WH000359 | WH000361 | WH000401 | WH000403 | WH000405 |
| EN 17645 Rating | C | C | C | C | C | C | C | C |
| EN 17645 SCOP | 5,2 | 4,6 | 4,3 | 4,2 | 4 | 4,3 | 4,5 | 4,2 |
| Recommended water flow (m³/h) | 4 | 5 | 6 | 7 | 8 | 6 | 7 | 8 |
| Electric Power Supply | 220-240 V / 1 / 50 Hz | | | | | 380-400 V / 3 / 50 Hz | | |
| Nominal operating power (A) | 6,9 | 10,1 | 13,4 | 17 | 19,4 | 6,1 | 7,7 | 8,5 |
| Maximum operating power (A) | 10 | 15 | 19 | 28 | 32 | 6,4 | 9,2 | 11,4 |
| Recommended Power cable size (mm²)* | 3 x 2,5 | 3 x 2,5 | 3 x 2,5 | 3 x 6 | 3 x 6 | 5 x 2,5 | 5 x 2,5 | 5 x 2,5 |
| Refrigerant fluid | R32 | R32 | R410A | R410A | R410A | R32 | R32 | R32 |
| Refrigerant fluid quantity (kg) | 0,87 | 0,99 | 1,45 | 1,8 | 1,8 | 1,18 | 1,59 | 1,59 |
| Acoustic Power (max-min) (dBA)** | 64 / 61 | 65 / 63 | 66 / 63 | 64 / 61 | 64 / 62 | 68 / 66 | 65 / 62 | 66 / 63 |
| Acoustic pressure at 10m (max-min) (dBA)** | 33 / 30 | 34 / 32 | 35 / 32 | 33 / 30 | 33 / 31 | 37 / 35 | 34/ 31 | 35 / 32 |

## HEATING PERFORMANCE

### AIR 26°C / WATER 26°C / HUMID. 80%

| | | | | | | | | |
|---|---|---|---|---|---|---|---|---|
| Operating Power (max-min) (kW) | 9,8 | 12,5 | 15,6 | 18,6 | 22 | 15,6 | 18,6 | 22 |
| Consumed Power (max-min) (kW) | 1,7 | 2,3 | 3,2 | 3,8 | 4,5 | 3 | 3,5 | 4,2 |
| COP | 5,9 | 5,2 | 4,9 | 4,9 | 4,9 | 5,2 | 5,3 | 5,2 |

### AIR 15°C / WATER 26°C / HUMID. 70%

| | | | | | | | | |
|---|---|---|---|---|---|---|---|---|
| Operating Power (max-min) (kW) | 7,9 | 10 | 12,4 | 14,8 | 17,5 | 12,4 | 14,8 | 17,5 |
| Consumed Power (max-min) (kW) | 1,6 | 2,2 | 2,9 | 3,5 | 4,2 | 2,9 | 3,5 | 4,1 |
| COP | 4,9 | 4,4 | 4,2 | 4,2 | 4,2 | 4,3 | 4,2 | 4,3 |

## DIMENSIONS AND WEIGHTS

| | | | | | | | | |
|---|---|---|---|---|---|---|---|---|
| Product Dimensions (Length x Height x Depth) (mm) | 1030 x 872 x 449mm | 1030 x 872 x 449mm | 1030 x 872 x 449mm | 1145 x 1018 x 480mm | 1145 x 1018 x 480mm | 1030 x 872 x 449mm | 1145 x 1018 x 480mm | 1145 x 1018 x 480mm |
| Product Weight (kg) | 70kg | 71kg | 90kg | 105kg | 110kg | 94kg | 105kg | 110kg |

*Cable not provided. Recommended section for maximum length of 20m.
**According to EN60704-1:2010+A11:2012 standard

ZODIAC®

HEAT PUMPS

# Z350iQ

+ **Maximum discretion**
+ **Guaranteed efficiency**
+ **Embedded connectivity: Free mobile Fluidra Pool app**

3 YEAR WARRANTY

MADE IN ITALY

FULL INVERTER

-7°C MIN. TEMP. AIR

HEATING & COOLING

FLUIDRA POOL

ENERGY EFFICIENT

Swivel top part

## DESCRIPTION

- Vertical Blowing
- Full Inverter Technology with 3 operating modes :
- Boost: Maximum power for quick heating at the beginning of the season
- Smart: Automatic power adjustment between Ecosilence and Boost
- Ecosilence: Greater energy savings and lower noise level
- Embedded connectivity with free mobile app
- Polypropylene body and galvanized steel body
- Heating priority mode (filtration pump control)
- Automatic defrosting
- Titanium water exchanger, compatible with salt water treatment
- Inverter rotary vane compressor
- LCD Display

## ACCESSORIES INCLUDED

- Winter cover
- Condensate drain kit
- 2 x PVC union Ø40
- 2 x PVC reduction Ø40/50
- 2 x PVC union 45° Ø50
- 4 x Anti-vibration feet

## OPTIONAL ACCESSORIES

- Cleaning kit HP - WMA03491

## TECHNICAL FEATURES

| Name | Z350iQ MD4 | Z350iQ MD5 | Z350iQ MD6 |
|---|---|---|---|
| Sku Reference | WH000507 | WH000508 | WH000509 |
| EN 17645 Rating | A | B | B |
| EN 17645 SCOP | 7,1 | 6,1 | 6,3 |
| Recommended water flow (m³/h) | 3,4 | 4,2 | 5 |
| Electric Power Supply | 220-240 V / 1 / 50-60 Hz | | |
| Nominal operating power (A) | 8 | 10,1 | 12 |
| Maximum operating power (A) | 9,1 | 10,8 | 13,5 |
| Recommended Power cable size (mm²)* | 3 x 2,5 | 3 x 2,5 | 3 x 2,5 |
| Refrigerant fluid | R32 | R32 | R32 |
| Refrigerant fluid quantity (kg) | 0,7 | 0,85 | 0,95 |
| Acoustic Power (max-min) (dBA)** | 70 - 64 | 71 - 63 | 73 - 65 |
| Acoustic pressure at 10m (max-min) (dBA)** | 39 - 33 | 40 - 32 | 42 - 34 |

## HEATING PERFORMANCE

### AIR 26°C / WATER 26°C / HUMID. 80%

| | | | |
|---|---|---|---|
| Operating Power (max-min) (kW) | 11- 3,1 | 14 - 4,4 | 16 - 4,7 |
| Consumed Power (max-min) (kW) | 1,9 - 0,3 | 2,6 - 0,5 | 3,2 - 0,5 |
| COP | 5,8 - 10,3 | 5,4 - 8,8 | 5 - 9,4 |

### AIR 15°C / WATER 26°C / HUMID. 70%

| | | | |
|---|---|---|---|
| Operating Power (max-min) (kW) | 8 - 2,5 | 10 - 2,7 | 12 - 3 |
| Consumed Power (max-min) (kW) | 1,8 - 0,4 | 2,3 - 0,5 | 2,8 - 0,6 |
| COP | 4,4 - 6,3 | 4,3 - 5,4 | 4,3 - 5 |

## DIMENSIONS AND WEIGHTS

| | | | |
|---|---|---|---|
| Product Dimensions (Length x Height x Depth) (mm) | 500 x 883 x 500mm | 500 x 883 x 500mm | 500 x 883 x 500mm |
| Product Weight (kg) | 41kg | 46kg | 47kg |

*Cable not provided. Recommended section for maximum length of 20m.
**According to EN60704-1:2010+A11:2012 standard

HEAT PUMPS

# Z260iQ

+ Simple & Efficient
+ Suits most pools
+ Embedded connectivity: free mobile Fluidra Pool app

3 YEAR WARRANTY
FULL INVERTER
-20°C MIN. TEMP. AIR
HEATING & COOLING
FLUIDRA POOL
ENERGY EFFICIENT

## DESCRIPTION

- Horizontal Blowing
- Full Inverter Technology with 3 operating modes :
- Boost: Maximum power for quick heating at the beginning of the season
- Smart: Automatic power adjustment between Ecosilence and Boost
- Ecosilence: Greater energy savings and lower noise level
- Galvanized steel painted body
- Heating priority mode (filtration pump control)
- Timed mode
- Automatic defrosting
- Titanium water exchanger, compatible with salt water treatment
- Rotary vane compressor
- LCD Display and touch buttons

## ACCESSORIES INCLUDED

- Winter cover
- Condensate drain kit
- 2 x PVC 1/2 union Ø 50
- 4 x Anti-vibration feet

## OPTIONAL ACCESSORIES

- Cleaning kit HP - WMA03491

## TECHNICAL FEATURES

| Name | Z260iQ MD4 | Z260iQ MD5 | Z260iQ MD6 | Z260iQ MD8 |
|---|---|---|---|---|
| Sku Reference | WH000609 | WH000610 | WH000611 | WH000612 |
| EN 17645 Rating | A | A | A | A |
| EN 17645 SCOP | 8,2 | 7,8 | 8,4 | 8,2 |
| Recommended water flow (m³/h) | 4 | 5 | 6 | 7 |
| Electric Power Supply | 220-240 V / 1 / 50-60 Hz | | | |
| Nominal operating power (A) | 7,2 | 9,0 | 10,6 | 14,1 |
| Maximum operating power (A) | 10 | 12 | 14 | 18 |
| Recommended Power cable size (mm²)* | 3 x 2,5 | 3 x 2,5 | 3 x 4 | 3 x 4 |
| Refrigerant fluid | R290 | R290 | R290 | R290 |

## HEATING PERFORMANCE

### AIR 26°C / WATER 26°C / HUMID. 80%

| | | | | |
|---|---|---|---|---|
| Operating Power (max-min) (kW) | 10,0 - 3,6 | 13,0 - 5,1 | 15,5 - 5,5 | 19,5 - 7 |
| Consumed Power (max-min) (kW) | 1,6 - 0,3 | 2,1 - 0,5 | 2,6 - 0,4 | 3,5 - 0,5 |
| COP | 6,2 - 12,2 | 6,1 - 11,2 | 6,1 - 12,4 | 5,6 - 12,5 |

### AIR 15°C / WATER 26°C / HUMID. 70%

| | | | | |
|---|---|---|---|---|
| Operating Power (max-min) (kW) | 8,0 - 2,7 | 10,0 - 3,9 | 12,0 - 3,9 | 15,0 - 4,8 |
| Consumed Power (max-min) (kW) | 1,6 - 0,3 | 2 - 0,5 | 2,4 - 0,5 | 3,2 - 0,7 |
| COP | 4,8 - 7,7 | 4,9 - 7,3 | 4,9 - 7,8 | 4,6 - 6,7 |

## DIMENSIONS AND WEIGHTS

| | | | | |
|---|---|---|---|---|
| Product Dimensions (Length x Height x Depth) (mm) | 1135 x 750 x 423,5mm | 1135 x 750 x 423,5mm | 1135 x 750 x 423,5mm | 1135 x 750 x 423,5mm |
| Product Weight (kg) | 66kg | 67kg | 78,5kg | 84kg |

*Cable not provided. Recommended section for maximum length of 20m.
**According to EN60704-1:2010+A11:2012 standard

ZODIAC®

HEAT PUMPS

# Z250iQ

+ Simple & Efficient
+ Wide range of powers
+ Embedded connectivity: free mobile Fluidra Pool app

3 YEAR WARRANTY · FULL INVERTER · -7°C MIN. TEMP. AIR · HEATING & COOLING · FLUIDRA POOL · ENERGY EFFICIENT

## DESCRIPTION

- Horizontal Blowing
- Full Inverter Technology with 3 operating modes :
- Boost: Maximum power for quick heating at the beginning of the season
- Smart: Automatic power adjustment between Ecosilence and Boost
- Ecosilence: Greater energy savings and lower noise level
- Galvanized steel painted body
- Heating priority mode (filtration pump control)
- Timed mode
- Automatic defrosting
- Titanium water exchanger, compatible with salt water treatment
- Rotary vane compressor
- LCD Display and touch buttons

## ACCESSORIES INCLUDED

- Winter cover
- Condensate drain kit
- 2 x PVC 1/2 union Ø 50
- 4 x Anti-vibration feet

## OPTIONAL ACCESSORIES

- Cleaning kit HP - WMA03491

## TECHNICAL FEATURES

| Name | Z250iQ MD3 | Z250iQ MD4 | Z250iQ MD5 | Z250iQ MD6 | Z250iQ MD8 | Z250iQ MD9 | Z250iQ MD12 | Z250iQ TD8 | Z250iQ TD9 | Z250iQ TD12 |
|---|---|---|---|---|---|---|---|---|---|---|
| Sku Reference | WH000587 | WH000588 | WH000589 | WH000590 | WH000591 | WH000593 | WH000595 | WH000592 | WH000594 | WH000596 |
| EN 17645 Rating | A | A | A | A | A | A | A | A | A | A |
| EN 17645 SCOP | 8,7 | 8,8 | 10,0 | 9,9 | 8,2 | 8,8 | 8,6 | 8,2 | 8,8 | 8,6 |
| Recommended water flow (m³/h) | 3 | 4 | 5 | 6 | 7 | 8 | 11 | 7 | 8 | 11 |
| Electric Power Supply | 220-240 V / 1 / 50-60 Hz | | | | | | | 380-400 V / 3 / 50-60 Hz | | |
| Nominal operating power (A) | 4,7 | 6 | 8,4 | 10,7 | 14 | 15,3 | 23 | 5,2 | 7,4 | 9,6 |
| Maximum operating power (A) | 8 | 9 | 13 | 16 | 19 | 20 | 30 | 21 | 24 | 30 |
| Recommended Power cable size (mm²)* | 3 x 2,5 | 3 x 2,5 | 3 x 2,5 | 3 x 4 | 3 x 4 | 3 x 4 | 3 x 6 | 5 x 2,5 | 5 x 2,5 | 5 x 2,5 |
| Refrigerant fluid | R32 | R32 | R32 | R32 | R32 | R32 | R32 | R32 | R32 | R32 |
| Refrigerant fluid quantity (kg) | 0,3 | 0,45 | 0,6 | 0,7 | 1 | 1,25 | 1,55 | 1 | 1,25 | 1,55 |
| Acoustic Power (max-min) (dBA)** | 62 - 50 | 65 - 52 | 65 - 52 | 67 - 54 | | | | | | |
| Acoustic pressure at 10m (max-min) (dBA)** | 31 - 19 | 34 - 21 | 34 - 21 | 36 - 23 | | | | | | |

## HEATING PERFORMANCE

### AIR 26°C / WATER 26°C / HUMID. 80%

| | | | | | | | | | | |
|---|---|---|---|---|---|---|---|---|---|---|
| Operating Power (max-min) (kW) | 7,0 - 2 | 9,5 - 2,3 | 13,0 - 2,4 | 19,0 - 7,5 | 19,0 - 7,5 | 24,0 - 6,7 | 31,0 - 9,2 | 19,0 - 7,5 | 24,0 - 6,7 | 31,0 - 9,2 |
| Consumed Power (max-min) (kW) | 1,1 - 0,15 | 1,4 - 0,2 | 2,0 - 0,1 | 2,5 - 0,15 | 3,5 - 0,6 | 4,5 - 0,5 | 5,6 - 0,7 | 3,5 - 0,6 | 4,5 - 0,5 | 5,6 - 0,7 |
| COP | 6,5 - 13,4 | 6,7 - 13,5 | 6,5 - 16,4 | 6,0 - 16,3 | 5,6 - 12,5 | 5,4 - 13,7 | 5,4 - 13,72 | 5,6 - 12,5 | 5,4 - 13,7 | 5,4 - 13,72 |

### AIR 15°C / WATER 26°C / HUMID. 70%

| | | | | | | | | | | |
|---|---|---|---|---|---|---|---|---|---|---|
| Operating Power (max-min) (kW) | 5,5 - 1,4 | 7,0 - 1,5 | 9,0 - 1,7 | 11,0 - 1,9 | 15,0 - 5,4 | 18,0 - 4,9 | 24,0 - 6,3 | 15,0 - 5,4 | 18,0 - 4,9 | 24,0 - 6,3 |
| Consumed Power (max-min) (kW) | 1,1 - 0,2 | 1,3 - 0,2 | 1,9 - 0,2 | 2,3 - 0,3 | 3,2 - 0,7 | 3,9 - 0,6 | 5,3 - 0,8 | 3,2 - 0,7 | 3,9 - 0,6 | 5,3 - 0,8 |
| COP | 5,2 - 6,4 | 5,3 - 6,6 | 4,8 - 7,8 | 4,8 - 7,7 | 4,6 - 7,4 | 4,5 - 7,8 | 4,5 - 7,5 | 4,6 - 7,4 | 4,5 - 7,8 | 4,5 - 7,5 |

## DIMENSIONS AND WEIGHTS

| | | | | | | | | | | |
|---|---|---|---|---|---|---|---|---|---|---|
| Product Dimensions (Length x Height x Depth) (mm) | 823 x 646 x 375mm | 823 x 646 x 375mm | 823 x 646 x 375mm | 906 x 646 x 375mm | 1103 x 746 x 395mm | 1133 x 846 x 545mm | 1133 x 846 x 545mm | 1103 x 746 x 395mm | 1133 x 846 x 545mm | 1133 x 846 x 545mm |
| Product Weight (kg) | 42,5kg | 44,5kg | 49,5kg | 56kg | 70kg | 88,5kg | kg | 73,5kg | 92kg | kg |

*Cable not provided. Recommended section for maximum length of 20m.
**According to EN60704-1:2010+A11:2012 standard

HEAT PUMPS

# Z250

Available until end of stock

- **+ Simple & efficient**
- **+ Extended pool season**
- **+ Suits most pools up to 90m³**

3 YEAR WARRANTY · FULL INVERTER · -7°C MIN. TEMP. AIR · HEATING & COOLING · ENERGY EFFICIENT

## DESCRIPTION

- Horizontal Blowing
- Full Inverter Technology with 3 operating modes :
- Boost: Maximum power for quick heating at the beginning of the season
- Smart: Automatic power adjustment between Ecosilence and Boost
- Ecosilence: Greater energy savings and lower noise level
- Galvanized steel painted body
- Heating priority mode (filtration pump control)
- Timed mode
- Automatic defrosting
- Titanium water exchanger, compatible with salt water treatment
- Rotary vane compressor
- LCD Display and touch buttons

## ACCESSORIES INCLUDED

- Winter cover
- Condensate drain kit
- 2 x PVC 1/2 union Ø 50
- 4 x Anti-vibration feet

## OPTIONAL ACCESSORIES

- Cleaning kit HP - WMA03491

## TECHNICAL FEATURES

| Name | Z250 MD3 | Z250 MD4 | Z250 MD5 | Z250 MD6 |
|---|---|---|---|---|
| Sku Reference | WH000552 | WH000553 | WH000554 | WH000555 |
| EN 17645 Rating | A | A | A | A |
| EN 17645 SCOP | 8,7 | 8,8 | 10 | 9,9 |
| Recommended water flow (m³/h) | 3 | 4 | 5 | 6 |
| Electric Power Supply | 220-240 V / 1 / 50-60 Hz | | | |
| Nominal operating power (A) | 4,7 | 6 | 8,4 | 10,7 |
| Maximum operating power (A) | 8 | 9 | 13 | 16 |
| Recommended Power cable size (mm²)* | 3 x 2,5 | 3 x 2,5 | 3 x 2,5 | 3 x 4 |
| Refrigerant fluid | R32 | R32 | R32 | R32 |
| Refrigerant fluid quantity (kg) | 0,3 | 0,45 | 0,6 | 0,7 |
| Acoustic Power (max-min) (dBA)** | 62 - 50 | 65 - 52 | 65 - 52 | 67 - 54 |
| Acoustic pressure at 10m (max-min) (dBA)** | 31 - 19 | 34 - 21 | 34 - 21 | 36 - 23 |

## HEATING PERFORMANCE

### AIR 26°C / WATER 26°C / HUMID. 80%

| | | | | |
|---|---|---|---|---|
| Operating Power (max-min) (kW) | 7 - 2 | 9,5 - 2,3 | 13 - 2,4 | 15 - 2,5 |
| Consumed Power (max-min) (kW) | 1,1 - 0,15 | 1,4 - 0,2 | 2 - 0,1 | 2,5 - 0,15 |
| COP | 6,5 - 13,4 | 6,7 - 13,5 | 6,5 - 16,4 | 6- 16,3 |

### AIR 15°C / WATER 26°C / HUMID. 70%

| | | | | |
|---|---|---|---|---|
| Operating Power (max-min) (kW) | 5,5 - 1,4 | 7- 1,5 | 9 - 1,7 | 11 - 1,9 |
| Consumed Power (max-min) (kW) | 1,1 - 0,2 | 1,3 - 0,2 | 1,9 - 0,2 | 2,3 - 0,25 |
| COP | 5,2- 6,4 | 5,3 - 6,6 | 4,8 - 7,8 | 4,8 - 7,7 |

## DIMENSIONS AND WEIGHTS

| | | | | |
|---|---|---|---|---|
| Product Dimensions (Length x Height x Depth) (mm) | 823 x 646 x 375mm | 823 x 646 x 375mm | 823 x 646 x 375mm | 906 x 646 x 375mm |
| Product Weight (kg) | 42,5kg | 44,5kg | 49,5kg | 56kg |

*Cable not provided. Recommended section for maximum length of 20m.
**According to EN60704-1:2010+A11:2012 standard

# Power Force

+ Variable speed fan
+ Year-round operation down to -12°C

3 YEAR WARRANTY

MADE IN ITALY

ON/OFF +

-12°C MIN. TEMP. AIR

HEATING & COOLING

## DESCRIPTION

- Horizontal Blowing
- Galvanized steel, epoxy painted body
- Heating priority mode (filtration pump control)
- Variable speed fan with automatic noise reduction
- Automatic defrosting
- Titanium water exchanger, compatible with salt water treatment
- Compressor scroll

## ACCESSORIES INCLUDED

- Condensate drain kit
- 2 x PVC 1/2 union Ø 63
- 4 x anti-vibration feet

## OPTIONAL ACCESSORIES

- Cleaning kit HP - WMA03491
- Remote control, 50 m cable - WTC04004
- Condensate tray, PowerForce - R07241

## TECHNICAL FEATURES

| Name | Power Force TD25 | Power Force TD35 |
|---|---|---|
| Sku Reference | W20PFORCE25TD | W20PFORCE35TD |
| EN 17645 Rating | C | C |
| EN 17645 SCOP | 5,1 | 5 |
| Recommended water flow (m³/h) | 10 | 10 |
| Electric Power Supply | 380-400 V / 3 / 50 Hz | |
| Nominal operating power (A) | 10,6 | 12,9 |
| Maximum operating power (A) | 14,2 | 18,1 |
| Recommended Power cable size (mm²)* | 5 x 4 | 5 x 4 |
| Refrigerant fluid | R410A | R410A |
| Refrigerant fluid quantity (kg) | 6,4 | 6,3 |
| Acoustic Power (max-min) (dBA)** | 70 | 71 |
| Acoustic pressure at 10m (max-min) (dBA)** | 38 | 39 |

## HEATING PERFORMANCE

### AIR 26°C / WATER 26°C / HUMID. 80%

| | | |
|---|---|---|
| Operating Power (max-min) (kW) | 33 | 45,5 |
| Consumed Power (max-min) (kW) | 6,1 | 8,6 |
| COP | 5,4 | 5,3 |

### AIR 15°C / WATER 26°C / HUMID. 70%

| | | |
|---|---|---|
| Operating Power (max-min) (kW) | 28,7 | 37 |
| Consumed Power (max-min) (kW) | 5,6 | 7,6 |
| COP | 5,1 | 4,9 |

## DIMENSIONS AND WEIGHTS

| | | |
|---|---|---|
| Product Dimensions (Length x Height x Depth) (mm) | 1439 x 1534 x 450mm | 1439 x 1534 x 450mm |
| Product Weight (kg) | 205kg | 205kg |

*Cable not provided. Recommended section for maximum length of 20m.
**According to EN60704-1:2010+A11:2012 standard

# PX50

- **Full Inverter Technology: silent and economical**
- **Intelligent heating regulation with power mode selection**
- **Wide range of powers**

3 YEAR WARRANTY · FULL INVERTER · -20°C MIN. TEMP. AIR · HEATING & COOLING · FLUIDRA POOL · ENERGY EFFICIENT

## DESCRIPTION

- Horizontal Blowing
- Full Inverter Technology with 3 operating modes :
- Boost: Maximum power for quick heating at the beginning of the season
- Smart: Automatic power adjustment between Ecosilence and Boost
- Ecosilence: Greater energy savings and lower noise level
- Connectivity (in option) with free mobile app thanks to iQBridge RS accessory
- Galvanized, epoxy painted body and ABS covering
- Heating priority mode (filtration pump control)
- Timed mode
- Automatic defrosting
- Titanium water exchanger, compatible with salt water treatment
- Rotary vane compressor
- LCD Display detachable

## ACCESSORIES INCLUDED

- Winter cover
- Condensate drain kit
- 2 x PVC 1/2 union Ø 50
- 4 x Anti-vibration feet
- Remote control kit (10m cable)

## OPTIONAL ACCESSORIES

- Cleaning kit HP - WMA03491
- iQBridge RS - 75042

## TECHNICAL FEATURES

| Name | PX50 MD3 | PX50 MD4 | PX50 MD5 | PX50 MD6 | PX50 MD7 | PX50 MD9 | PX50 MD11 | PX50 MD12 | PX50 TD11 | PX50 TD12 |
|---|---|---|---|---|---|---|---|---|---|---|
| Sku Reference | WH000428 | WH000429 | WH000430 | WH000431 | WH000432 | WH000433 | WH000434 | WH000436 | WH000435 | WH000437 |
| EN 17645 Rating | A | A | A | A | A | A | A | A | A | A |
| EN 17645 SCOP | 7,7 | 7,7 | 7,7 | 7,7 | 7,6 | 7,7 | 7,8 | 7,7 | 7,8 | 7,7 |
| Recommended water flow (m³/h) | 4 | 5 | 6 | 7 | 8 | 10 | 13 | 13 | 13 | 13 |
| Electric Power Supply | 220-240 V / 1 / 50-60 Hz | | | | | | | | 380-400 V / 3 / 50-60 Hz | |
| Nominal operating power (A) | 4,6 | 5,9 | 7,2 | 9,2 | 10,5 | 13,2 | 17 | 22,9 | 7 | 8,4 |
| Maximum operating power (A) | 6,4 | 8,3 | 10 | 13 | 14,7 | 18,5 | 24 | 32 | 9,8 | 11,8 |
| Recommended Power cable size (mm²)* | 3 x 1,5 | 3 x 1,5 | 3 x 2,5 | 3 x 2,5 | 3 x 2,5 | 3 x 4 | 3 x 4 | 3 x 6 | 5 x 2,5 | 5 x 4 |
| Refrigerant fluid | R32 | R32 | R32 | R32 | R32 | R32 | R32 | R32 | R410A | R410A |
| Refrigerant fluid quantity (kg) | 0,72 | 0,55 | 0,8 | 0,81 | 1,5 | 1,7 | 2,4 | 2,4 | 3 | 4 |
| Acoustic Power (max-min) (dBA)** | 65 - 53 | 67 - 54 | 71 - 54 | 71 - 55 | 73 - 56 | 73 - 56 | 75 - 58 | 75 - 58 | 75 - 58 | 75 - 58 |
| Acoustic pressure at 10m (max-min) (dBA)** | 34 - 22 | 36 - 23 | 39 - 23 | 40 - 23 | 41 - 24 | 42 - 25 | 43 - 26 | 44 - 27 | 44 - 26 | 44 - 27 |

## HEATING PERFORMANCE

### AIR 26°C / WATER 26°C / HUMID. 80%

| | | | | | | | | | | |
|---|---|---|---|---|---|---|---|---|---|---|
| Operating Power (max-min) (kW) | 9 - 1,9 | 10,5 - 2,1 | 13,5 - 2,5 | 16,5 - 3 | 19,5 - 3,5 | 25 - 4,5 | 31 - 5,6 | 35 - 7,6 | 31 - 5,6 | 35 - 7,6 |
| Consumed Power (max-min) (kW) | 1,6 - 0,2 | 1,8 - 0,2 | 2,2 - 0,2 | 2,8 - 0,2 | 3,3 - 0, 3 | 4,2 - 0,3 | 5,3 - 0,4 | 5,9 - 0,5 | 5,3 - 0,4 | 5,9 - 0,5 |
| COP | 5,8 - 16 | 5,8 - 16 | 5,8 - 16 | 5,8 - 16 | 5,8 - 16 | 5,8 - 16 | 5,8 - 16 | 5,8 - 16 | 5,8 - 16 | 5,8 - 16 |

### AIR 15°C / WATER 26°C / HUMID. 70%

| | | | | | | | | | | |
|---|---|---|---|---|---|---|---|---|---|---|
| Operating Power (max-min) (kW) | 6,3 - 1,9 | 7,6 - 2 | 9,4 - 2 | 11,2 - 2,5 | 13,7 - 3 | 17,7 - 4 | 22,1 - 5,4 | 24 - 5,6 | 22,1 - 5,4 | 24 - 5,6 |
| Consumed Power (max-min) (kW) | 1,4 - 0,3 | 1,8 - 0,3 | 2,1 - 0,3 | 2,5 - 0,3 | 3,1 - 0,4 | 4 - 0,5 | 5 - 0,7 | 5,4 - 0,7 | 5 - 0,7 | 5,4 - 0,7 |
| COP | 4,5- 8 | 4,5- 8 | 4,5- 8 | 4,5- 8 | 4,5- 8 | 4,5- 8 | 4,5- 8 | 4,5- 8 | 4,5- 8 | 4,5- 8 |

## DIMENSIONS AND WEIGHTS

| | | | | | | | | | | |
|---|---|---|---|---|---|---|---|---|---|---|
| Product Dimensions (Length x Height x Depth) (mm) | 859 x 641 x 357mm | 985 x 736 x 375mm | 985 x 736 x 375mm | 985 x 736 x 375mm | 1074 x 941 x 395mm | 1074 x 941 x 395mm | 1039 x 1339 x 410mm | 1039 x 1339 x 410mm | 1039 x 1339 x 410mm | 1039 x 1339 x 410mm |
| Product Weight (kg) | 52kg | 58kg | 61kg | 62kg | 89kg | 92kg | 120kg | 126kg | 123kg | 128kg |

*Cable not provided. Recommended section for maximum length of 20m.
**According to EN60704-1:2010+A11:2012 standard

# PM40

Available until end of stock

3 YEAR WARRANTY

ON/OFF +

-8°C MIN. TEMP. AIR

HEATING & COOLING

FLUIDRA POOL

- **+ Reversible operation down to -8°C outdoor air temperature**
- **+ 2-speed ventilation: with automatic silent mode**
- **+ Wide range of powers**

## DESCRIPTION

- Horizontal Blowing
- Galvanized, epoxy painted body
- Connectivity (in option) with free mobile app thanks to iQBridge RS accessory
- Heating priority mode (filtration pump control)
- Timed mode
- 2-speed fan with automatic noise reduction
- Automatic defrosting
- Titanium water exchanger, compatible with salt water treatment
- Rotary vane or Scroll compressor
- LCD Display detachable

## ACCESSORIES INCLUDED

- Winter cover
- Condensate drain kit
- 2 x PVC 1/2 union Ø 50
- 4 x Anti-vibration feet
- Remote control kit (10m cable)

## OPTIONAL ACCESSORIES

- Cleaning kit HP - WMA03491
- iQBridge RS - 75042

## TECHNICAL FEATURES

| Name | PM40 MD1 | PM40 MD2 | PM40 MD3 | PM40 MD4 | PM40 MD5 | PM40 MD7 | PM40 MD8 | PM40 TD7 | PM40 TD8 | PM40 TD12 |
|---|---|---|---|---|---|---|---|---|---|---|
| Sku Reference | WH000418 | WH000419 | WH000420 | WH000421 | WH000422 | WH000488 | WH000426 | WH000423 | WH000425 | WH000489 |
| EN 17645 Rating | C | C | C | C | C | C | C | C | C | C |
| EN 17645 SCOP | 4,5 | 5 | 4,8 | 4,9 | 5,3 | 4,6 | 5,3 | 5,2 | 5,7 | 5,3 |
| Recommended water flow (m³/h) | 2,5 | 3 | 5 | 6 | 7 | 9 | 12 | 9 | 12 | 16 |
| Electric Power Supply | 220-240 V / 1 / 50 Hz | | | | | | | 380-400 V / 3 / 50-60 Hz | | |
| Nominal operating power (A) | 4,1 | 6,2 | 8,9 | 9,7 | 11 | 13,5 | 16,8 | 5,1 | 5,6 | 10,1 |
| Maximum operating power (A) | 5,2 | 8,8 | 10,7 | 12,3 | 13,1 | 20,3 | 23 | 7,9 | 9,8 | 13,6 |
| Recommended Power cable size (mm²)* | 3 x 1,5 | 3 x 2,5 | 3 x 2,5 | 3 x 2,5 | 3 x 2,5 | 3 x 4 | 3 x 4 | 5 x 2,5 | 5 x 2,5 | 5 x 4 |
| Refrigerant fluid | R32 | R32 | R32 | R32 | R32 | R32 | R410A | R32 | R32 | R32 |
| Refrigerant fluid quantity (kg) | 0,4 | 0,75 | 0,9 | 1,1 | 1,15 | 1,1 | 2,3 | 1,1 | 1,45 | 2,2 |
| Acoustic Power (max-min) (dBA)** | 63 - 62 | 66 - 64 | 67 - 64 | 67 - 64 | 69 - 64 | 74 - 72 | 77 - 76 | 75 - 74 | 76 - 73 | 76 - 75 |
| Acoustic pressure at 10m (max-min) (dBA)** | 32 - 31 | 35 - 33 | 36 - 33 | 36 - 33 | 38 - 33 | 43 - 41 | 45 - 44 | 44 - 43 | 44 - 41 | 45 - 44 |

## HEATING PERFORMANCE

### AIR 26°C / WATER 26°C / HUMID. 80%

| | | | | | | | | | | |
|---|---|---|---|---|---|---|---|---|---|---|
| Operating Power (max-min) (kW) | 7,0 - 2 | 9,5 - 2,3 | 13,0 - 2,4 | 19,0 - 7,5 | 19,0 - 7,5 | 24,0 - 6,7 | 31,0 - 9,2 | 19,0 - 7,5 | 24,0 - 6,7 | 31,0 - 9,2 |
| Consumed Power (max-min) (kW) | 1,1 - 0,15 | 1,4 - 0,2 | 2,0 - 0,1 | 2,5 - 0,15 | 3,5 - 0,6 | 4,5 - 0,5 | 5,6 - 0,7 | 3,5 - 0,6 | 4,5 - 0,5 | 5,6 - 0,7 |
| COP | 6,5 - 13,4 | 6,7 - 13,5 | 6,5 - 16,4 | 6,0 - 16,3 | 5,6 - 12,5 | 5,4 - 13,7 | 5,4 - 13,72 | 5,6 - 12,5 | 5,4 - 13,7 | 5,4 - 13,72 |

### AIR 15°C / WATER 26°C / HUMID. 70%

| | | | | | | | | | | |
|---|---|---|---|---|---|---|---|---|---|---|
| Operating Power (max-min) (kW) | 3,2 | 5,5 | 7,5 | 8,5 | 10,5 | 12,9 | 16 | 13,5 | 16 | 23 |
| Consumed Power (max-min) (kW) | 0,8 | 1,2 | 1,7 | 1,9 | 2,2 | 2,8 | 3,5 | 3,1 | 3,7 | 4,8 |
| COP | 4 | 4,8 | 4,4 | 4,6 | 4,8 | 4,6 | 4,6 | 4,4 | 4,4 | 4,8 |

## DIMENSIONS AND WEIGHTS

| | | | | | | | | | | |
|---|---|---|---|---|---|---|---|---|---|---|
| Product Dimensions (Length x Height x Depth) (mm) | 798 x 511 x 293mm | 958 x 581 x 360mm | 1015 x 621 x 370mm | 1015 x 621 x 370mm | 1070 x 708 x 416mm | 1070 x 708 x 416mm | 1077 x 958 x 446mm | 1070 x 708 x 416mm | 1077 x 958 x 446mm | 1077 x 1258 x 446mm |
| Product Weight (kg) | 38kg | 54kg | 64kg | 70kg | 81kg | 102kg | 119kg | 95kg | 111kg | 147kg |

*Cable not provided. Recommended section for maximum length of 20m.
**According to EN60704-1:2010+A11:2012 standard

# HPO

Available until end of stock

- + Full Inverter Technology: silent and economical
- + Intelligent heating regulation with power mode selection
- + Wide range of powers

3 YEAR WARRANTY · FULL INVERTER · -20°C MIN. TEMP. AIR · HEATING & COOLING · FLUIDRA POOL · ENERGY EFFICIENT

## DESCRIPTION

- Horizontal Blowing
- Full Inverter Technology with 3 operating modes :
- Boost: Maximum power for quick heating at the beginning of the season
- Smart: Automatic power adjustment between Ecosilence and Boost
- Ecosilence: Greater energy savings and lower noise level
- Connectivity (in option) with free mobile app thanks to iQBridge RS accessory
- Galvanized, epoxy painted body
- Heating priority mode (filtration pump control)
- Timed mode
- Automatic defrosting
- Titanium water exchanger, compatible with salt water treatment
- Rotary vane compressor
- LCD Display detachable

## ACCESSORIES INCLUDED

- Winter cover
- Condensate drain kit
- 2 x PVC 1/2 union Ø 50
- 4 x Anti-vibration feet
- Remote control kit (10m cable)

## OPTIONAL ACCESSORIES

- Cleaning kit HP - WMA03491
- iQBridge RS - 75042

## TECHNICAL FEATURES

| Name | HPO-6 | HPO-8 | HPO-9 | HPO-11 | HPO-14 | HPO-18 |
|---|---|---|---|---|---|---|
| Sku Reference | WH000492 | WH000493 | WH000494 | WH000495 | WH000496 | WH000497 |
| EN 17645 Rating | A | A | A | A | A | A |
| EN 17645 SCOP | 7,6 | 7,8 | 7,8 | 7,8 | 7,7 | 7,7 |
| Recommended water flow (m³/h) | 4 | 5 | 6 | 7 | 8 | 10 |
| Electric Power Supply | 220-240 V / 1 / 50-60 Hz | | | | | |
| Nominal operating power (A) | 4,6 | 5,9 | 7,2 | 9,2 | 10,5 | 13,2 |
| Maximum operating power (A) | 6,3 | 7,6 | 9,2 | 10,8 | 12,3 | 16,6 |
| Recommended Power cable size (mm²)* | 3 x 1,5 | 3 x 1,5 | 3 x 2,5 | 3 x 2,5 | 3 x 2,5 | 3 x 4 |
| Refrigerant fluid | R32 | R32 | R32 | R32 | R32 | R32 |
| Refrigerant fluid quantity (kg) | 0,72 | 0,55 | 0,8 | 0,81 | 1,5 | 1,7 |
| Acoustic Power (max-min) (dBA)** | 65 - 53 | 67 - 54 | 71 - 54 | 71 - 55 | 73 - 56 | 73 - 56 |
| Acoustic pressure at 10m (max-min) (dBA)** | 34 - 22 | 36 - 23 | 39 - 23 | 40 - 23 | 41 - 24 | 42 - 25 |

## HEATING PERFORMANCE

### AIR 26°C / WATER 26°C / HUMID. 80%

| | | | | | | |
|---|---|---|---|---|---|---|
| Operating Power (max-min) (kW) | 9 - 1,9 | 10,5 - 2,1 | 13,5 - 2,5 | 16,5 - 3 | 19,5 - 3,5 | 25 - 4,5 |
| Consumed Power (max-min) (kW) | 1,6 - 0,2 | 1,8 - 0,2 | 2,2 - 0,2 | 2,8 - 0,2 | 3,3 - 0, 3 | 4,2 - 0,3 |
| COP | 5,8 - 16 | 5,8 - 16 | 5,8 - 16 | 5,8 - 16 | 5,8 - 16 | 5,8 - 16 |

### AIR 15°C / WATER 26°C / HUMID. 70%

| | | | | | | |
|---|---|---|---|---|---|---|
| Operating Power (max-min) (kW) | 6,3 - 1,9 | 7,6 - 2 | 9,4 - 2 | 11,2 - 2,5 | 13,7 - 3 | 17,7 - 4 |
| Consumed Power (max-min) (kW) | 1,4 - 0,3 | 1,8 - 0,3 | 2,1 - 0,3 | 2,5 - 0,3 | 3,1 - 0,4 | 4 - 0,5 |
| COP | 4,5- 8 | 4,5- 8 | 4,5- 8 | 4,5- 8 | 4,5- 8 | 4,5- 8 |

## DIMENSIONS AND WEIGHTS

| | | | | | | |
|---|---|---|---|---|---|---|
| Product Dimensions (Length x Height x Depth) (mm) | 859 x 641 x 446,5mm | 985 x 736 x 537mm | 985 x 736 x 537mm | 985 x 736 x 537mm | 1074 x 941 x 707mm | 1074 x 941 x 707mm |
| Product Weight (kg) | 52kg | 58kg | 61kg | 62kg | 89kg | 92kg |

*Cable not provided. Recommended section for maximum length of 20m.
**According to EN60704-1:2010+A11:2012 standard

HEAT PUMPS

# Z300

+ Guaranteed heating: thanks to heating priority
+ Can also be installed in a technical room

Available until end of stock

## DESCRIPTION

- Horizontal Blowing
- Polypropylene body
- Heating priority mode (filtration pump control)
- Automatic defrosting
- Titanium water exchanger, compatible with salt water treatment
- Rotary vane compressor

## ACCESSORIES INCLUDED

- Winter cover
- Condensate drain kit
- 2 x PVC 1/2 union Ø 50
- 4 x Anti-vibration feet

## OPTIONAL ACCESSORIES

- Cleaning kit HP - WMA03491
- Remote control, 50 m cable - WTC04004
- Technical room kit - W20KITPFPREMLT
- Condensate tray - R07242
- Wall mounting kit Z300 - R07339

## TECHNICAL FEATURES

| Name | Z300 M4 | Z300 M5 | Z300 T5 | Z300 M7 |
|---|---|---|---|---|
| Sku Reference | WH000014 | WH000015 | WH000016 | WH000019 |
| Recommended water flow (m³/h) | 4 | 5 | 5 | 6 |
| Electric Power Supply | 220-240 V / 1 / 50 Hz | | | |
| Nominal operating power (A) | 7,9 | 10,3 | 4,3 | 13 |
| Maximum operating power (A) | 10 | 14,5 | 5,3 | 16,4 |
| Recommended Power cable size (mm²)* | 3 x 2,5 | 3 x 2,5 | 5 x 2,5 | 3 x 4 |
| Refrigerant fluid | R410A | R410A | R410A | R410A |
| Refrigerant fluid quantity (kg) | 0,92 | 1,55 | 1,55 | 1,4 |
| Acoustic Power (max-min) (dBA)** | 67 | 68 | 70 | 67 |
| Acoustic pressure at 10m (max-min) (dBA)** | 36 | 37 | 39 | 36 |

## HEATING PERFORMANCE

### AIR 26°C / WATER 26°C / HUMID. 80%

| | | | | |
|---|---|---|---|---|
| Operating Power (max-min) (kW) | 9 | 13 | 13,1 | 16,1 |
| Consumed Power (max-min) (kW) | 1,6 | 2,4 | 2,3 | 2,9 |
| COP | 5,6 | 5,5 | 5,6 | 5,6 |

### AIR 15°C / WATER 26°C / HUMID. 70%

| | | | | |
|---|---|---|---|---|
| Operating Power (max-min) (kW) | 7,6 | 10,4 | 10,5 | 13,7 |
| Consumed Power (max-min) (kW) | 1,7 | 2,2 | 2,2 | 2,9 |
| COP | 4,5 | 4,7 | 4,7 | 4,7 |

## DIMENSIONS AND WEIGHTS

| | | | | |
|---|---|---|---|---|
| Product Dimensions (Length x Height x Depth) (mm) | 958 x 837 x 460mm | 958 x 837 x 460mm | 958 x 837 x 460mm | 958 x 837 x 460mm |
| Product Weight (kg) | 52kg | 63kg | 63kg | 68kg |

*Cable not provided. Recommended section for maximum length of 20m.
**According to EN60704-1:2010+A11:2012 standard

# Z200 Defrost

Available until end of stock

- + The most compact
- + Operating down to -5°C outdoor temperature
- + Suits most pools

3 YEAR WARRANTY

ON/OFF

-5°C MIN. TEMP. AIR

HEAT ONLY

## DESCRIPTION

- Horizontal Blowing
- Polypropylene body
- Heating priority mode (filtration pump control)
- Automatic defrosting (cycle inversion)
- Titanium water exchanger, compatible with salt water treatment
- Rotary vane

## ACCESSORIES INCLUDED

- Winter cover
- Condensate drain kit
- 2 PVC fittings with gaskets, 1/2 unions, Ø 40 & Ø 50
- Anti-vibration feet. X4

## OPTIONAL ACCESSORIES

- Cleaning kit HP - WMA03491
- Remote control - WH000476
- Wall mounting Kit - R07338

## TECHNICAL FEATURES

| Name | Z200 MD5 | Z200 MD2 | Z200 MD3 | Z200 MD4 |
|---|---|---|---|---|
| Sku Reference | WH000410 | WH000407 | WH000408 | WH000409 |
| Recommended water flow (m³/h) | 5 | 4 | 4 | 5 |
| Electric Power Supply | 220-240 V / 1 / 50 Hz | | | |
| Nominal operating power (A) | 11,2 | 4,5 | 6,3 | 7,9 |
| Maximum operating power (A) | 13,4 | 5,2 | 7,6 | 10,2 |
| Recommended Power cable size (mm²)* | 3 x 2,5 | 3 x 2,5 | 3 x 2,5 | 3 x 2,5 |
| Refrigerant fluid | R32 | R32 | R32 | R32 |
| Refrigerant fluid quantity (kg) | 1,1 | 0,68 | 0,8 | 1 |
| Acoustic Power (max-min) (dBA)** | 72 | 66 | 67 | 69 |
| Acoustic pressure at 10m (max-min) (dBA)** | 41 | 35 | 36 | 37 |

## HEATING PERFORMANCE

### AIR 26°C / WATER 26°C / HUMID. 80%

| | | | | |
|---|---|---|---|---|
| Operating Power (max-min) (kW) | 14,8 | 6,7 | 9,3 | 11,5 |
| Consumed Power (max-min) (kW) | 3,2 | 1,2 | 1,8 | 2,3 |
| COP | 4,6 | 5,5 | 5 | 5,1 |

### AIR 15°C / WATER 26°C / HUMID. 70%

| | | | | |
|---|---|---|---|---|
| Operating Power (max-min) (kW) | 10,1 | 4,8 | 7 | 8,1 |
| Consumed Power (max-min) (kW) | 2,5 | 1 | 1,6 | 2 |
| COP | 4 | 4,8 | 4,4 | 4 |

## DIMENSIONS AND WEIGHTS

| | | | | |
|---|---|---|---|---|
| Product Dimensions (Length x Height x Depth) (mm) | 840 x 666 x 392mm | 840 x 666 x 392mm | 840 x 666 x 392mm | 840 x 666 x 392mm |
| Product Weight (kg) | 46kg | 40kg | 35kg | 40kg |

*Cable not provided. Recommended section for maximum length of 20m.
**According to EN60704-1:2010+A11:2012 standard

# Z200

Available until end of stock

- + The most compact
- + Guaranteed heating: thanks to heating priority
- + Suits most pools

3 YEAR WARRANTY

ON/OFF

+5°C MIN. TEMP. AIR

HEAT ONLY

## DESCRIPTION

- Horizontal Blowing
- Polypropylene body
- Heating priority mode (filtration pump control)
- Automatic defrosting (forced ventilation)
- Titanium water exchanger, compatible with salt water treatment
- Rotary vane

## ACCESSORIES INCLUDED

- Winter cover
- Condensate drain kit
- 2 PVC fittings with gaskets, 1/2 unions, Ø 40 & Ø 50
- Anti-vibration feet. X4

## OPTIONAL ACCESSORIES

- Cleaning kit HP - WMA03491
- Remote control - WH000200
- Wall mounting Kit - R07338

## TECHNICAL FEATURES

| Name | Z200 M2 | Z200 M3 | Z200 M4 | Z200 M5 |
|---|---|---|---|---|
| Sku Reference | WH000307 | WH000308 | WH000309 | WH000310 |
| Recommended water flow (m³/h) | 4 | 4 | 5 | 5 |
| Electric Power Supply | 220-240 V / 1 / 50 Hz | | | |
| Nominal operating power (A) | 4,5 | 6,3 | 7,9 | 11,2 |
| Maximum operating power (A) | 5,2 | 7,6 | 10,2 | 13,4 |
| Recommended Power cable size (mm²)* | 3 x 2,5 | 3 x 2,5 | 3 x 2,5 | 3 x 2,5 |
| Refrigerant fluid | R32 | R32 | R32 | R32 |
| Refrigerant fluid quantity (kg) | 0,68 | 0,8 | 1 | 1,1 |
| Acoustic Power (max-min) (dBA)** | 66 | 67 | 69 | 72 |
| Acoustic pressure at 10m (max-min) (dBA)** | 35 | 36 | 37 | 41 |

## HEATING PERFORMANCE

### AIR 26°C / WATER 26°C / HUMID. 80%

| | | | | |
|---|---|---|---|---|
| Operating Power (max-min) (kW) | 6,7 | 9,3 | 11,5 | 14,8 |
| Consumed Power (max-min) (kW) | 1,2 | 1,8 | 2,3 | 3,2 |
| COP | 5,5 | 5 | 5,1 | 4,6 |

### AIR 15°C / WATER 26°C / HUMID. 70%

| | | | | |
|---|---|---|---|---|
| Operating Power (max-min) (kW) | 4,8 | 7 | 8,1 | 10,1 |
| Consumed Power (max-min) (kW) | 1 | 1,6 | 2 | 2,5 |
| COP | 4,8 | 4,4 | 4 | 4 |

## DIMENSIONS AND WEIGHTS

| | | | | |
|---|---|---|---|---|
| Product Dimensions (Length x Height x Depth) (mm) | 840 x 666 x 392mm | 840 x 666 x 392mm | 840 x 666 x 392mm | 840 x 666 x 392mm |
| Product Weight (kg) | 40kg | 35kg | 40kg | 46kg |

*Cable not provided. Recommended section for maximum length of 20m.
**According to EN60704-1:2010+A11:2012 standard

# > WEIGHTS AND DIMENSIONS

For complete technical & dimensional details, refer to the datasheet/user manual.

## Z550iQ - WEIGHT AND DIMENSIONS

| Model | Z550iQ MD4 | Z550iQ MD5 | Z550iQ TD5 | Z550iQ MD8 | Z550iQ TD8 |
|---|---|---|---|---|---|
| Weight | 54 kg | 60 kg | 60 kg | 70 kg | 70 kg |

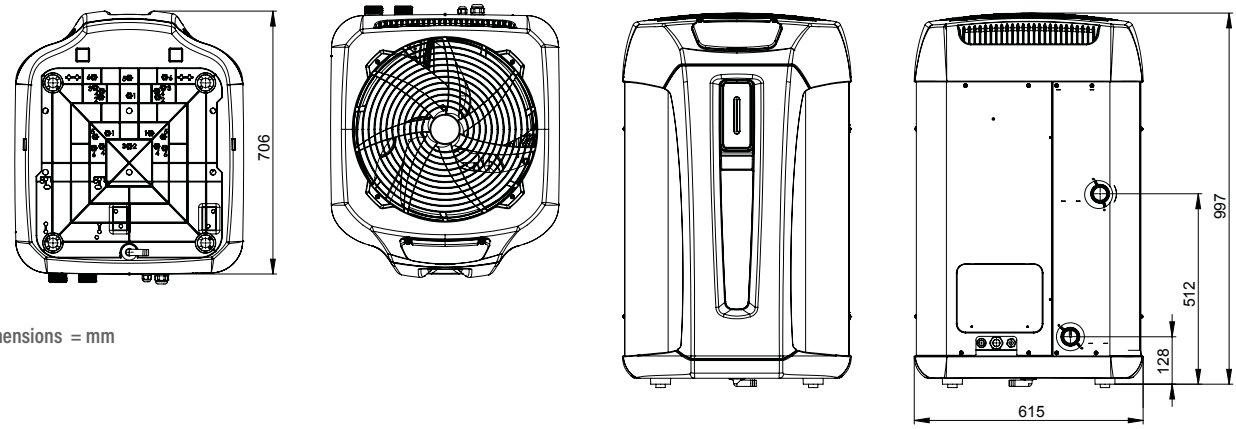


Dimensions = mm

## Z400iQ - WEIGHT AND DIMENSIONS

| Model | MD4 | MD5 | MD7 | TD7 | MD8 | TD8 | MD9 | TD9 |
|---|---|---|---|---|---|---|---|---|
| Weight | 70 kg | 71 kg | 90 kg | 94 kg | 105 kg | | 110 kg | |
| A | 1030 mm | | | | 1145 mm | | | |
| B | 872 mm | | 1018 mm | | | | | |
| C | 449 mm | | | | 480 mm | | | |
| D | 132 mm | | | | 125 mm | | | |
| E | 516 mm | | | | 510 mm | | | |

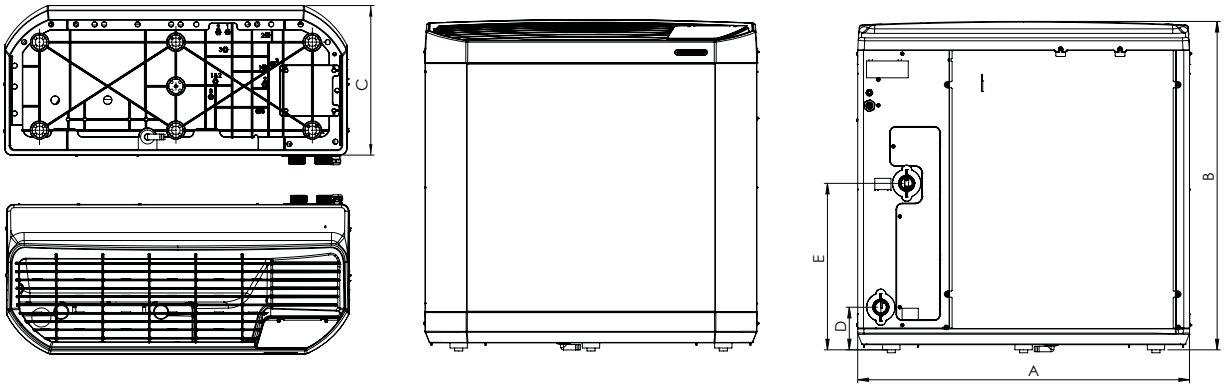


## Z350iQ - WEIGHT AND DIMENSIONS

| Model | Z350iQ MD4 | Z350iQ MD5 | Z350iQ MD6 |
|---|---|---|---|
| Weight | 41 kg | 46 kg | 47 kg |

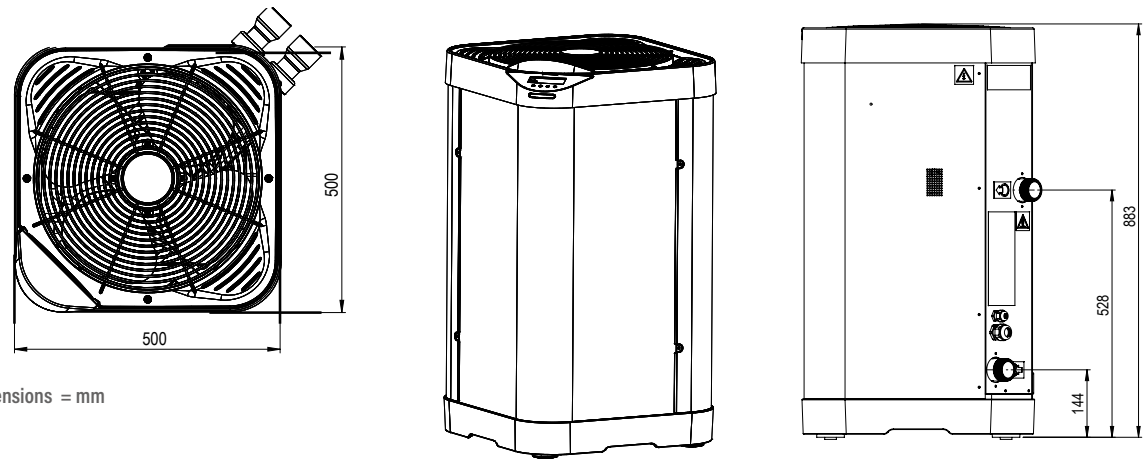


Dimensions = mm

## Z260iQ - WEIGHT AND DIMENSIONS

| Model | Z260iQ MD4 | Z260iQ MD5 | Z260iQ MD6 | Z260iQ MD8 |
|---|---|---|---|---|
| Weight | 66kg | 67kg | 78,5kg | 84kg |
| A | 750 mm | | | |
| B | 1135 mm | | | |
| C | 392 mm | | | |
| D | 721 mm | | | |
| E | 423,5 mm | | | |
| F | 275 mm | | 390 mm | |
| G | 110 mm | | | |

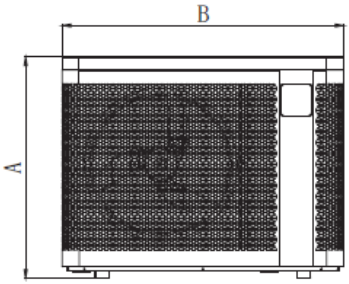


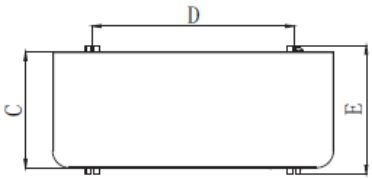


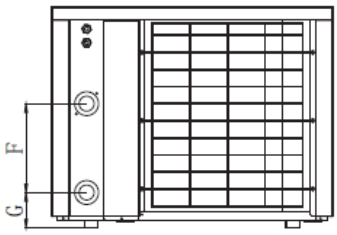


## Z250iQ - WEIGHT AND DIMENSIONS

| Model | Z250iQ MD3 | Z250iQ MD4 | Z250iQ MD5 | Z250iQ MD6 | Z250iQ MD8 | Z250iQ MD9 | Z250iQ MD12 | Z250iQ TD8 | Z250iQ TD9 | Z250iQ TD12 |
|---|---|---|---|---|---|---|---|---|---|---|
| Weight | 42,5kg | 44,5kg | 49,5kg | 56kg | 70kg | 88,5kg | kg | 73,5kg | 92kg | kg |
| A | 646 mm | | | | 746 mm | | 846 mm | | | |
| B | 823 mm | | | 906 mm | 1103 mm | | 1133 mm | | | |
| C | 339,5 mm | | | | 359 mm | | 509,5 mm | | | |
| D | 590 mm | | | 593 mm | 790 mm | | 743 mm | | | |
| E | 375 mm | | | | 395 mm | | 545 mm | | | |
| F | 300 mm | | 260 mm | 330 mm | 350 mm | | 367 mm | | 430 mm | |
| G | 93 mm | | 103 mm | 93 mm | 93 mm | | 93 mm | | | |

## Z250 - WEIGHT AND DIMENSIONS

| Model | Z250 MD3 | Z250 MD4 | Z250 MD5 | Z250 MD6 |
|---|---|---|---|---|
| Weight | 42,5 kg | 44,5 kg | 49,5 kg | 56 kg |
| A | 646 mm | | | |
| B | 823 mm | | | 906 mm |
| C | 339,5 mm | | | |
| D | 590 mm | | | 593 mm |
| E | 375 mm | | | |
| F | 300 mm | | 260 mm | 330 mm |
| G | 93 mm | | 103 mm | 93 mm |

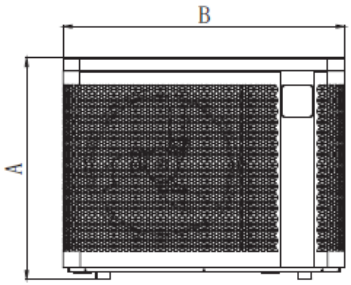


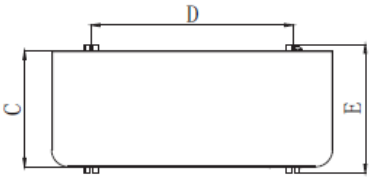


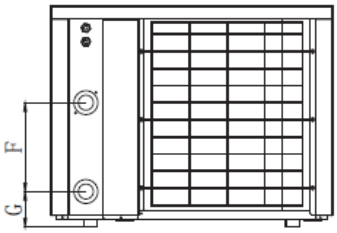

## POWERFORCE - WEIGHT AND DIMENSIONS

| Model | TD25 | TD35 |
|---|---|---|
| Weight | 205 kg | 205 kg |

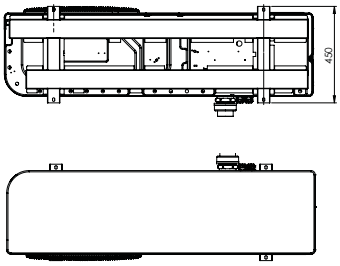


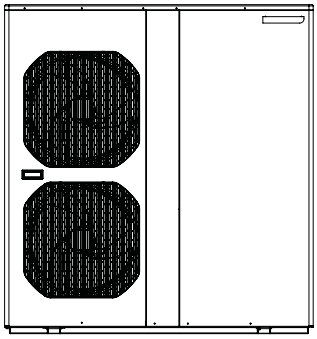

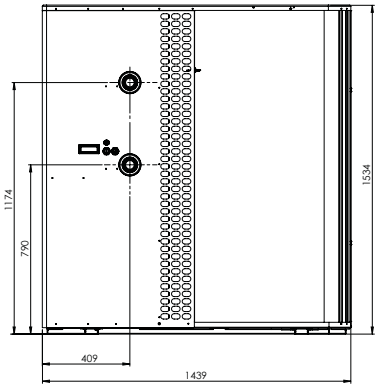


Dimensions = mm

## PX50 - WEIGHT AND DIMENSIONS

| Model | MD3 | MD4 | MD5 | MD6 | MD7 | MD9 | MD11 | MD12 | TD11 | TD12 |
|---|---|---|---|---|---|---|---|---|---|---|
| Weight | 52 kg | 58 kg | 61 kg | 62 kg | 89 kg | 92 kg | 120 kg | 126 kg | 123 kg | 128 kg |
| A | 859 mm | 985 mm | | | 1074 mm | | 1039 mm | | | |
| B | 641 mm | 736 mm | | | 941 mm | | 1339 mm | | | |
| C | 357 mm | 375 mm | | | 395 mm | | 410 mm | | | |
| D | 97 mm | 97 mm | | | 107 mm | | 112 mm | | | |
| E | 446,5 mm | 537 mm | | | 707 mm | | 962 mm | | | |

PX50 MD3, MD4, MD5, MD6, MD7, MD9

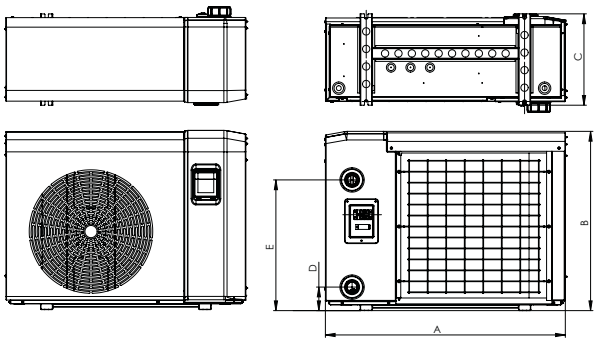


PX50 MD11, TD11, MD12, TD12

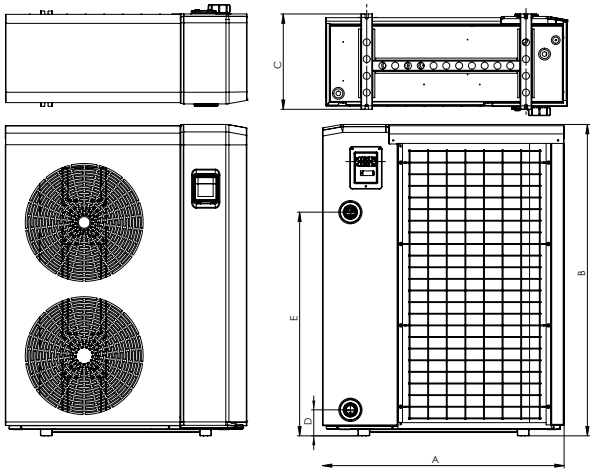


## PM40 - WEIGHT AND DIMENSIONS

| Model | MD1 | MD2 | MD3 | MD4 | MD5 | MD7 | MD8 | TD7 | TD8 | TD12 |
|---|---|---|---|---|---|---|---|---|---|---|
| Weight | 38 kg | 54 kg | 64 kg | 70 kg | 81 kg | 102 kg | 119 kg | 95 kg | 111 kg | 147 kg |

PM40 MD1, MD2, MD3, MD4, MD5, MD7, TD7, MD8, TD8

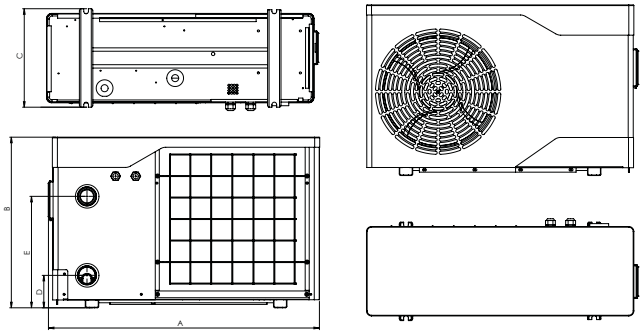


PM40 TD12

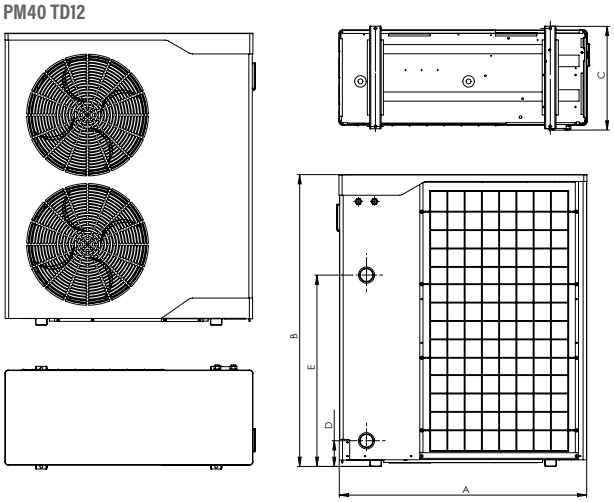


Dimensions = mm

## HPO - WEIGHT AND DIMENSIONS

| Model | HPO-6 | HPO-8 | HPO-9 | HPO-11 | HPO-14 | HPO-18 |
|---|---|---|---|---|---|---|
| Weight (kg) | 52 kg | 58 kg | 61 kg | 62 kg | 89 kg | 92 kg |
| A | 859 mm | 985 mm | | | 1074 mm | |
| B | 641 mm | 736 mm | | | 941 mm | |
| C | 357 mm | | | | 395 mm | |
| D | 97 mm | | | | 107 mm | |
| E | 446,5 mm | 537 mm | | | 707 mm | |

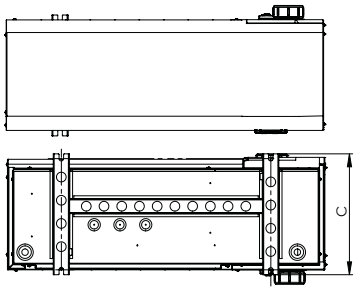


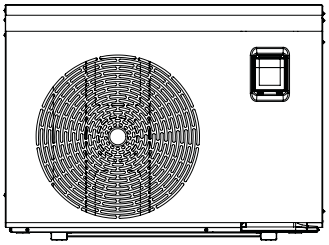

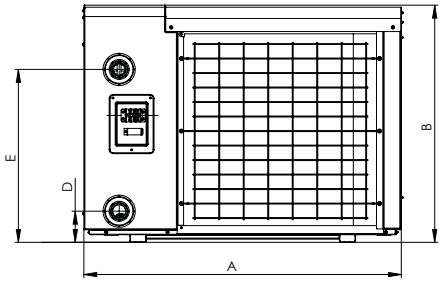


## Z300 - WEIGHT AND DIMENSIONS

| Model | Z300 M4 | Z300 M5 | Z300 T5 | Z300 M7 |
|---|---|---|---|---|
| Weight | 52 kg | 63 kg | 63 kg | 68 kg |

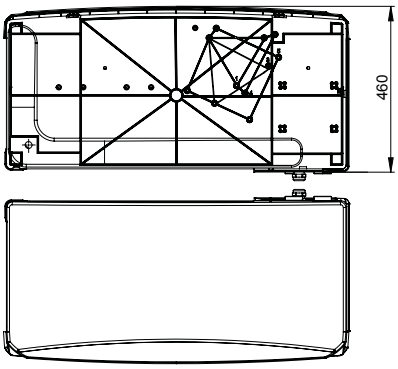


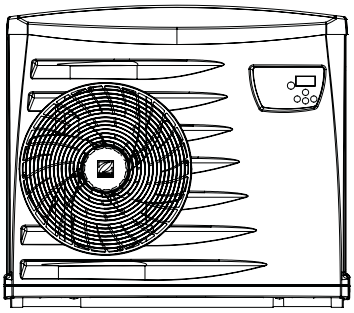

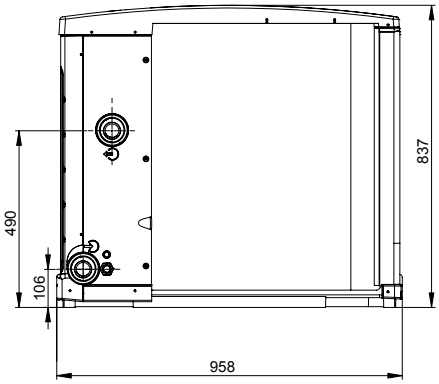


Dimensions = mm

## Z200 - Z200D - WEIGHT AND DIMENSIONS

| Model | Z200 M2 /MD2 | Z200 M3 / MD3 | Z200 M4 / MD4 | Z200 M5/ MD5 |
|---|---|---|---|---|
| Weight (kg) | 40 kg | 35 kg | 40 kg | 46 kg |

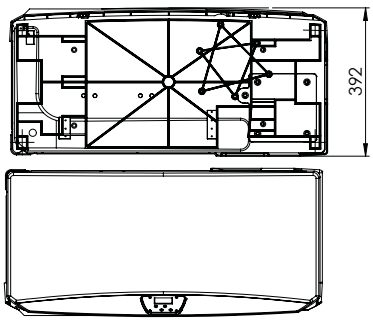


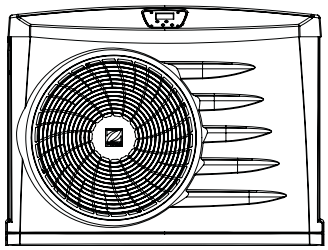

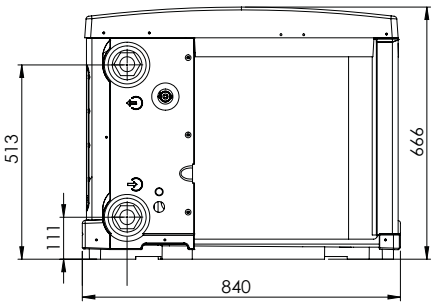


Dimensions = mm

# HEAT EXCHANGERS

## Heating the pool using the domestic heating

Installed close to the boiler, Zodiac® heat exchangers use the heating circuit in the house to heat the water in the swimming pool. **Very financially advantageous**, they are also very efficient and provide a **rapid temperature rise**.

### > CHOOSING A HEAT EXCHANGER

Several parameters are considered when choosing a heat exchanger. Depending on the size of the pool to be heated, the desired use (temperature and period) and temperature of the primary heating circuit, the appropriate heat exchanger should be selected.

Zodiac® heat exchangers are **compatible with all domestic heating systems.**
With more than 17 models, they are suitable for all installations.

Ti 22 TITANE INSIDE

**REFERENCE POINT**
All Zodiac® heat exchangers are fitted with titanium pipes and plates making them very robust.

### COMPARATIVE TABLE OF RANGES

| | HEAT LINE | | | URANUS+ | |
|---|---|---|---|---|---|
| | Unequipped | Plus, without circulating pump | Plus, with circulating pump | Unequipped | Plus |
| | | | | | |
| Application | All heating types | | | All heating types | |
| Power with primary at 90°C | From 20 to 70 kW | | | From 35 to 240 kW | |
| Power with primary at 45°C | From 4 to 14 kW | | | From 13 to 57 kW | |
| Assembly type | In line without bypass | | | L with bypass | |
| Heat exchanger type | Titanium multi-tube | | | Titanium plates | |
| Flow switch | | • | • | | • |
| Regulation | | • | • | | • |
| Circulating pump | | | • | | • |
| Warranty | 2 years | | | | |

EXCHANGERS

# Uranus

## Unequipped and Plus

Uranus PLUS

Uranus Unequipped

+ Compatible with all types of home heating systems (Heat Pump, Boiler, Geothermal, Solar)
+ High heat exchange
+ Digital regulation

## DESCRIPTION

- Appliance completely assembled and wired
- High performance plate exchanger TITANIUM plates
- PRIMARY with adjustable accelerator 2 1/4 turn valves, 1 valve - male thread. Ø 26/34 with Ø 20/22 soldering cartridges
- SECONDARY - PVC Ø 50
- Digital display thermostat
- Flow switch
- Mono 230 V wiring from a mains outlet
- Purge or emptying cap

2 YEAR WARRANTY

MADE IN SPAIN

EASY INTALLATION

## PRODUCT REFERENCES

| Model | URANUS 35 | URANUS 70 | URANUS 120 | URANUS 240 |
|---|---|---|---|---|
| Unequipped | WJ000001 | WJ000003 | WJ000005 | WJ000007 |
| Plus | WJ000002 | WJ000004 | WJ000006 | WJ000008 |

## TECHNICAL FEATURES

| Model | | URANUS 35 | URANUS 70 | URANUS 120 | URANUS 240 |
|---|---|---|---|---|---|
| Max. pressure (pool circuit) | | 3 bar / 2 bar | | | |
| Max. permitted temperature | | 90 °C / 40°C | | | |
| Connections | PRIMARY Heating (Unequipped model) | Ø20/22 | | | Ø26/28 |
| | SECONDARY Pool | PVC Ø50 | | | |
| Flow ($m^3$/H) | PRIMARY Heating | 1,6 | 2,1 | 2,8 | 6,3 |
| | SECONDARY Pool | 2 | 2,9 | 4,3 | 8,7 |
| Load Loss (MMCE) | PRIMARY Heating | 1500 | 1200 | 1000 | 2000 |
| | SECONDARY Pool | 2400 | 2300 | 2500 | 3800 |

## HEATING PERFORMANCE

| Model | URANUS 35 | URANUS 70 | URANUS 120 | URANUS 240 |
|---|---|---|---|---|
| Power with primary at 90°C (kW) | 55 | 80 | 120 | 240 |
| Power with primary at 60°C (kW) | 27 | 38 | 63 | 123 |
| Power with primary at 45°C (kW) | 15 | 21 | 34 | 68 |

## DIMENSIONS (MM) AND WEIGHT

| Model | URANUS 35 | URANUS 70 | URANUS 120 | URANUS 240 |
|---|---|---|---|---|
| Unequipped | 14 kg | 15 kg | 17 kg | 31 kg |
| Plus | 29 kg | 30 kg | 31 kg | 50 kg |

## DIMENSIONS (MM) UNEQUIPPED MODEL

| Model | URANUS 35-70-120 | URANUS 240 |
|---|---|---|
| Lht | 255 | 407 |
| L2 | 140 | 200 |
| L3 | 50 | 60 |
| Hht | 380 | 500 |
| H1 | 339 | 429 |
| H2 | 41 | 75 |
| H3 | 298 | 357 |

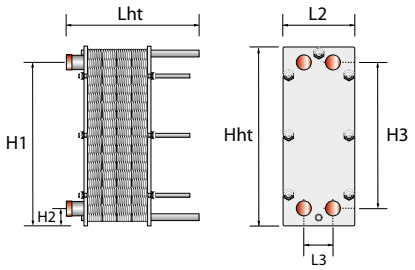


## DIMENSIONS (MM) PLUS MODEL

| Model | URANUS 35-70-120 | URANUS 240 |
|---|---|---|
| A | 758 | 840 |
| B | 334 | 347 |
| C | 415 | 480 |
| D | 116 | 137 |
| E | 414 | 494 |
| F | 250 | 250 |
| G | 200 | 450 |
| H | 127 | 148 |
| I | 50 | 60 |

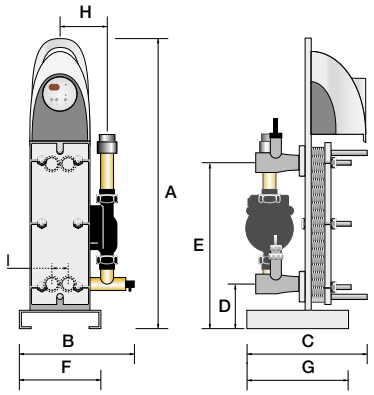


## INSTALLATION

- In the technical facility nearby the boiler at the filtering system output (plan a by-pass).
- Single-phase electric power supply 230V
- In special cases: exchanger supplied from a geothermal or heat pump.
- The exchanger must be sized taking into account the heating needs of the pool, the specifications of the exchangers with primary at 45°C or 60°C (see specifications table) and the power of the geothermal. For correct operation of the geothermal we recommend installing a buffer tank as shown in the diagram below.

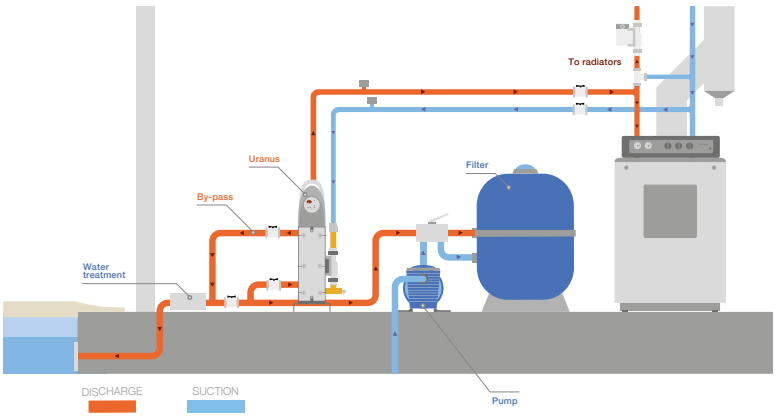


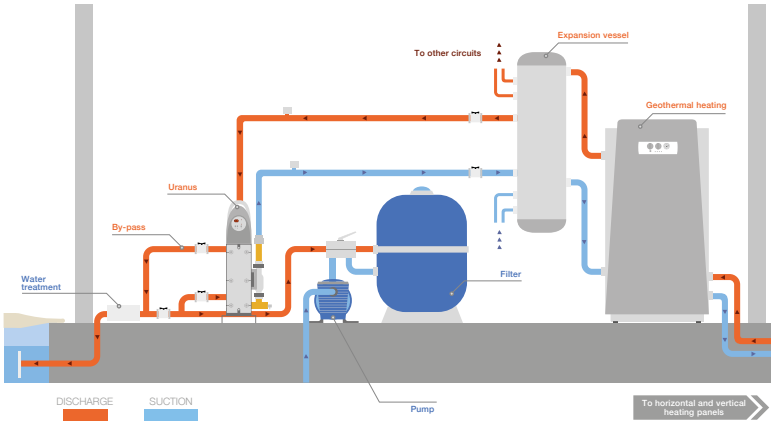

EXCHANGERS

# Heat Line

Unequipped, Plus without circulating pump & with circulating pump

Unequipped

Plus with regulation and without circulating pump

Plus with regulation and circulating pump

2 YEAR WARRANTY

MADE IN FRANCE

EASY INTALLATION

+ Compatible with all types of home heating systems (Heat Pump, Boiler, Geothermal, Solar)
+ Versatile installation concept
+ Digital regulation

## DESCRIPTION

- Injected noryl Polyamide casing
- TITANIUM tubes
- Check valve
- Low consumption circulating pump, A class (1)
- Reversible interface (allowing right or left pool water inlet)
- Flow switch (2)
- Pre-wired electric box with 230 V plug (2)
- Digital regulation (2)
- Reversible installation layout

(1) On «Plus» models with circulating pump (2) On «Plus» models with and without circulating pump

## PRODUCT REFERENCES

| Model | HEATLINE 20 | HEATLINE 40 | HEATLINE 70 |
|---|---|---|---|
| **Unequipped** | W49NT20 | W49NT40 | W49NT70 |
| **Plus, without circulating pump** | W49KT20W | W49KT40W | W49KT70W |
| **Plus, with circulating pump** | W49KT20 | W49KT40 | W49KT70 |

## TECHNICAL FEATURES

| Model | | HEATLINE 20 | HEATLINE 40 | HEATLINE 70 |
|---|---|---|---|---|
| Max. pressure (pool circuit) | | 2 bar | | |
| Max. permitted temperature | | 90 °C | | |
| Connections | PRIMARY Heating (Unequipped model) | Ø26/34 F / Ø26/34 M | Ø26/34 F - Ø26/34 M | Ø26/34 F / Ø26/34 M |
| | SECONDARY Pool | PVC Ø63 ou 50 | | |
| Flow ($m^3$/H) | PRIMARY Heating | 0,9 | 1,7 | 3 |
| | SECONDARY Pool | 10 | 15 | 20 |
| Load Loss (MMCE) | PRIMARY Heating | 150 | 200 | 300 |
| | SECONDARY Pool | 500 | 800 | 1000 |

* Private open-air pool, temperate climate with an isothermal cover and primary at 90°C from May 15th to September 15th

## HEATING PERFORMANCE

| Model | HEATLINE 20 | HEATLINE 40 | HEATLINE 70 |
|---|---|---|---|
| Power with primary at 90°C (kW) | 20 | 40 | 70 |
| Power with primary at 60°C (kW) | 8,5 | 17 | 30 |
| Power with primary at 45°C (kW) | 4 | 8 | 14 |

## DIMENSIONS (MM) AND WEIGHT

| Model | HEATLINE 20 | HEATLINE 40 | HEATLINE 70 |
|---|---|---|---|
| Unequipped | 3 kg | 3 kg | 4 kg |
| Plus, without circulating pump | 4 kg | 4 kg | 5 kg |
| Plus, with circulating pump | 6,5 kg | 7 kg | 12 kg |

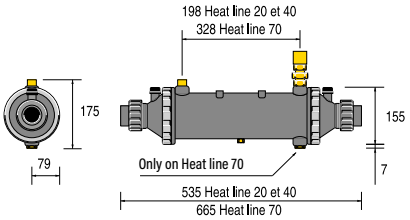


Heat Line Unequipped

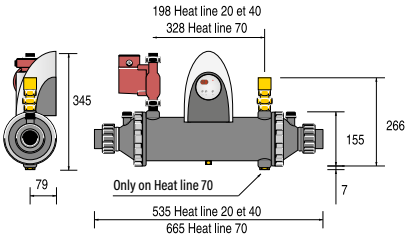


Heat Line Plus with circulating pump

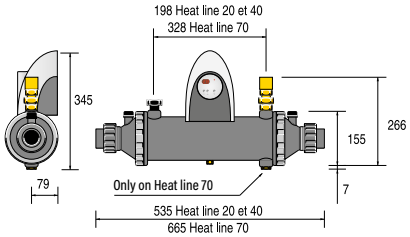


Heat Line Plus without circulating pump

## INSTALLATION

- In the technical facility nearby the boiler at the filtering system output (without a by-pass). Horizontal in-line position on the pipe. Primary supply from above.
- Single-phase electric power supply 230V
- Primary and secondary circuits' flow may be reversed by turning the exchanger.
- Special cases: exchanger powered using solar panels.
- The exchanger must be chosen according to pool heating requirements, exchanger specifications with primary at 45 °C or 60 °C (see specifications table) and power returned by the solar panels. In all cases, the exchanger must be supplied from a solar tank installed between the panels and the exchanger.
- Heat Line exchangers are not compatible with direct connection to solar panels.
- Caution: maximum primary source temperature = 90 °C Maximum pressure = 2 bar. Exchanger installed with existing wall-mounted boiler or with boiler whose regulator is in the boiler's interior.

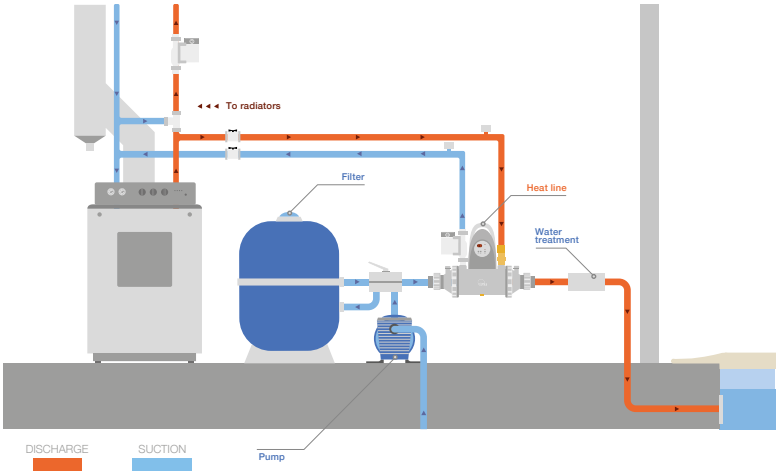


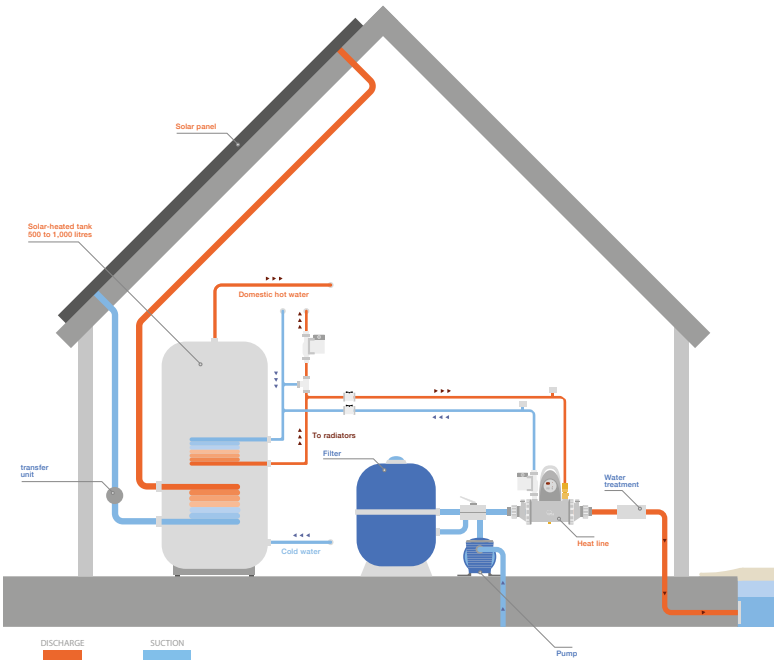

# ELECTRIC HEATERS

## The simplest solution for a fast rise in temperature

**Easy to install and to use, Zodiac® electric heaters heat your pool rapidly and keep the water at the desired temperature.**

Compact, stand-alone units, they are fitted to the filtration system. Start filtration to raise the temperature.

### > CHOOSING AN ELECTRIC HEATER

Several parameters should be considered when choosing a suitable electric heater. **Depending on the size of the pool to be heated and the desired use (temperature and period), the power of the system should be adapted,** from 3 kW to 120 kW.

In a small technical room, **install the system in 'L' configuration.** In-line installation limits pressure drops.

To control the desired temperature, **there are two types of thermostat: mechanical and digital.** Using a complete digital regulator, it is also possible to control timer settings.

Ti 22 TITANE INSIDE

**REFERENCE POINT**
All Zodiac® electric heater models are equipped with titanium heating elements, making them very robust.

### COMPARATIVE TABLE OF RANGES

| | RE/L | RED LINE | RE/U |
|---|---|---|---|
| | | | |
| Pool size* | < 95 m³ | < 95 m³ | From 195 m³ |
| Power rating | From 3 to 12 kW | From 3 to 12 kW | From 12 to 24 kW |
| Assembly type | L | In line | In line |
| Modular type | - | - | • |
| Thermostat type | Mechanical | Digital | Digital |
| Waranty | 2 years | | |

ELECTRIC HEATERS

# RE/U

+ Full digital regulation
+ 2-stage power management
+ Maximum robustness

2 YEAR WARRANTY

MADE IN FRANCE

EASY INTALLATION

Ti22 TITANE INSIDE

## DESCRIPTION

- Control box with precision thermostat of +/- 0.5°C
- Digital display and timer
- Positive safety high temperature limiter
- Pin water tightness using EPDM collars
- HYPALON electric connections
- Flow switch
- Power contactors
- Luminous control switches + indicators
- Pin water tightness using EPDM collars
- Single-phase 230V-50/60Hz or three-phase 400 V depending on model
- LCD Display

## TECHNICAL FEATURES

| Name | RE/U 12M | RE/U 15T | RE/U 15M | RE/U 18T | RE/U 21T | RE/U 24T |
|---|---|---|---|---|---|---|
| Sku Reference | W40TIT12M | W40TIT15 | W40TIT15M | W40TIT18 | W40TIT21 | W40TIT24 |
| Recommended water flow (m³/h) | 5 - 22 | 5 - 22 | 5 - 22 | 5 - 22 | 5 - 22 | 5 - 22 |
| Electric Power Supply | 220-240 V / 1 / 50-60 Hz | 380-400 V / 3 / 50-60 Hz | 220-240 V / 1 / 50-60 Hz | 380-400 V / 3 / 50-60 Hz | | |
| Maximum operating power (A) | 53 | 22 | 66 | 26 | 31 | 35 |
| Recommended Power cable size (mm²) | 3 x 16 | 5 x 6 | 3 x 16 | 5 x 6 | 5 x 10 | 5 x 10 |

## HEATING PERFORMANCE

| | | | | | | |
|---|---|---|---|---|---|---|
| Operating Power (max-min) (kW) | 6 + 6 | 9 + 9 | 6 + 9 | 9 + 9 | 9 + 12 | 12 + 12 |

## DIMENSIONS AND WEIGHT

| | | | | | | |
|---|---|---|---|---|---|---|
| Product Dimensions (Length x Height x Depth) (mm) | 600 x 80 x 143mm | 600 x 80 x 143mm | 600 x 80 x 143mm | 600 x 80 x 143mm | 600 x 80 x 143mm | 600 x 80 x 143mm |
| Product Weight (kg) | 12kg | 12kg | 12kg | 12kg | 12kg | 12kg |

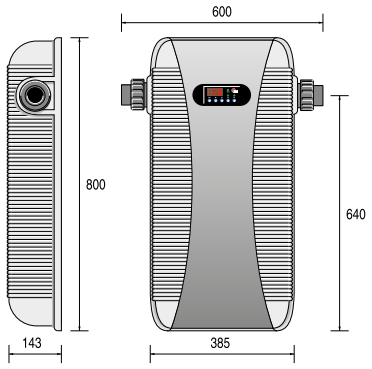


## INSTALLATION

- In-line PVC hydraulic connection, Ø63 (exterior) or Ø50 (interior).
- Supports any flow direction: just turn the flow switch and reverse the control and safety sensors.

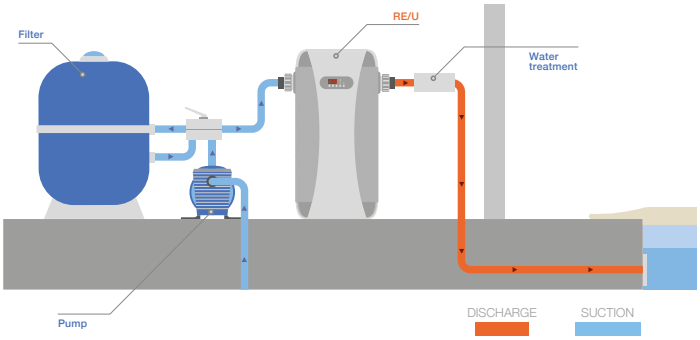

ZODIAC®

ELECTRIC HEATERS

# Red Line

- + In-line, low pressure drop layout
- + 1 or 3 phase wiring (on-site configuration)
- + Full digital regulation

2 YEAR WARRANTY · MADE IN FRANCE · EASY INTALLATION · Ti22 TITANE INSIDE

## DESCRIPTION

- Control box with precision thermostat of +/- 0.5°C
- Positive safety high temperature limiter
- Watertightness of electrical resistances with an EPDM collar
- Hypalon electric connections
- Flow switch
- Power contactors
- On/Off switch + Indicators
- Single or 3 phase wiring (on-site configuration)
- REDLINE 12: always 3 phase wiring 400V-50/60Hz
- LCD Display

## TECHNICAL FEATURES

| Name | REDLINE 3 | REDLINE 6 | REDLINE 9 | REDLINE 12 |
|---|---|---|---|---|
| Sku Reference | W40RDE3 | W40RDE6 | W40RDE9 | W40RDE12 |
| Recommended water flow (m³/h) | 5 - 30 | 5 - 30 | 5 - 30 | 5 - 30 |
| Electric Power Supply | 220-240 V / 1 / 50-60 Hz & 380-400V / 3 / 50-60 Hz | | | 380-400 V / 3 / 50-60 Hz |
| Maximum operating power (A) | 14 (1-phase) 5 (3-phases) | 27 (1-phase) 9 (3-phases) | 40 (1-phase) 13 (3-phases) | 18 (3-phases) |
| Recommended Power cable size (mm²) | 3 x 4 (1-phase) 5 x 2,5 (3 phases) | 3 x 6 (1-phase) 5 x 2,5 (3 phases) | 3 x 10 (1-phase) 5 x 4 (3 phases) | 5 x 4 (3 phases) |

*220-240 V / 1 / 50-60 Hz by default*
*380-400V / 3 / 50-60 Hz if shunt removed*

## HEATING PERFORMANCE

| | | | | |
|---|---|---|---|---|
| Operating Power (max-min) (kW) | 3 | 6 | 9 | 12 |

## DIMENSIONS AND WEIGHT

| | | | | |
|---|---|---|---|---|
| Product Dimensions (Length x Height x Depth) (mm) | 538 x 222 x 100mm | 538 x 222 x 100mm | 638 x 222 x 100mm | 638 x 222 x 100mm |
| Product Weight (kg) | 4kg | 4kg | 4kg | 4kg |

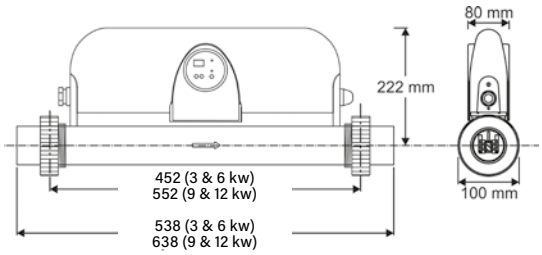


## INSTALLATION

- In-line connection with two PVC unions, Ø63, and reducers, Ø63-50.
- Supports any flow direction: just turn the device to match the water flow direction.

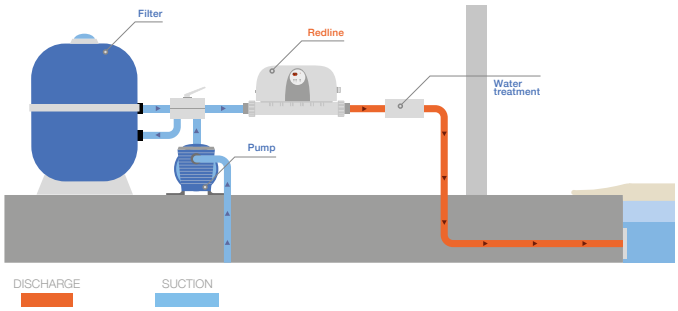

ELECTRIC HEATERS

# RE/L

- L-shape, space-saving
- 1 or 3 phase wiring (on-site configuration)
- Mechanical thermostat

2 YEAR WARRANTY · MADE IN FRANCE · EASY INTALLATION · TITANE INSIDE

## DESCRIPTION

- Rotating mechanical 16-40°C thermostat
- Positive safety high temperature limiters
- Watertightness of electrical resistances with an EPDM collar
- Hypalon moulded electric connections
- Flow switch
- Power contactor
- Single or 3 phase wiring (on-site configuration)
- RE/L 12: always 3 phase wiring 400V-50/60Hz
- Thermostat control button

## TECHNICAL FEATURES

| Name | RE/L 3 | RE/L 6 | RE/L 9 | RE/L 12 |
|---|---|---|---|---|
| Sku Reference | W40LE03 | W40LE06 | W40LE09 | W40LE12 |
| Recommended water flow (m³/h) | 5 - 22 | 5 - 22 | 5 - 22 | 5 - 22 |
| Electric Power Supply | 220-240 V / 1 / 50-60 Hz & 380-400V / 3 / 50-60 Hz | | | 380-400 V / 3 / 50-60 Hz |
| Maximum operating power (A) | 14 (1-phase) 5 (3-phases) | 27 (1-phase) 9 (3-phases) | 40 (1-phase) 13 (3-phases) | 18 (3-phases) |
| Recommended Power cable size (mm²) | 3 x 4 (1-phase) 5 x 2,5 (3 phases) | 3 x 6 (1-phase) 5 x 2,5 (3 phases) | 3 x 10 (1-phase) 5 x 4 (3 phases) | 5 x 4 (3 phases) |

*220-240 V / 1 / 50-60 Hz by default*
*380-400V / 3 / 50-60 Hz if shunt removed*

## HEATING PERFORMANCE

| | | | | |
|---|---|---|---|---|
| Operating Power (max-min) (kW) | 3 | 6 | 9 | 12 |

## DIMENSIONS AND WEIGHT

| | | | | |
|---|---|---|---|---|
| Product Dimensions (Length x Height x Depth) (mm) | 275 x 550 x 120mm | 275 x 550 x 120mm | 275 x 730 x 120mm | 275 x 730 x 120mm |
| Product Weight (kg) | 4kg | 4kg | 5kg | 5kg |

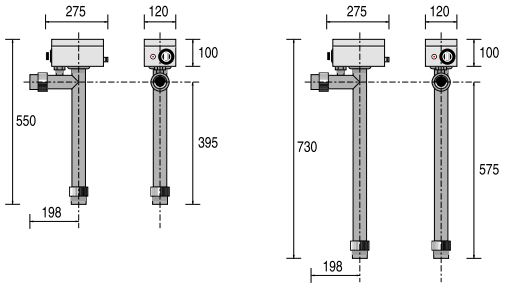


## INSTALLATION

- Shipped with wall-mount bracket.
- In-line PVC hydraulic connection, Ø50 or 63.
- Supports any flow direction: just turn the device to match the water flow direction.

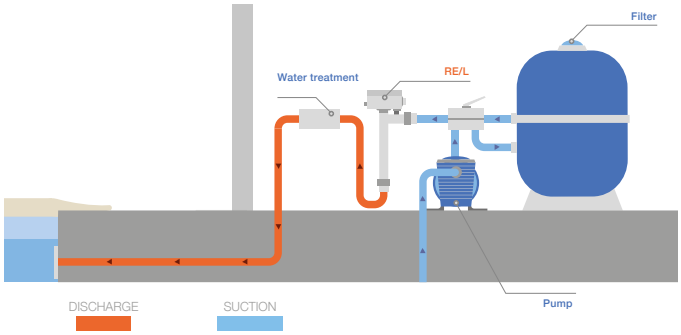

# > COMPARATIVE TABLE

| | | | | | | |
|---|---|---|---|---|---|---|
| | Range | **APH3** | **PROELYO TOUCH** | **ECO ELYO** | **BERING INVERTER** | **EVOLINE** |
| | Professional advice recommended | ✓ | ✓ | ✓ | ✓ | ✓ |
| Key drivers for a fast pre-selection | Min Air T°C | -20°C | -20°C | -5°C | -7°C | +0°C |
| | Seasonality | All year round | All year round | Extended season | Extended season | Extended season |
| | Technology | FULL INVERTER | FULL INVERTER | FULL INVERTER | INVERTER | ON-OFF |
| | Cooling mode | ✓ | ✓ | ✓ | ✓ | ✓ |
| | App control (wifi) | x | ✓ (with optional iQ bridge) | ✓ (embedded) | x | ✓ |
| | Air blowing type | Horizontal | Horizontal | Horizontal | Horizontal | Horizontal |
| | Free area around the heat pump | ++ | ++ | ++ | ++ | ++ |
| | Electric power supply | Single-phase | Single-phase and three phase | Single-phase | Single-phase | Single-phase and three phase |
| | Can be installed indoor | x | x | x | x | x |
| Performances | Range of powers (@26°C Air / 26°C Water) | 14W to 26kW (4 powers) | 8.5kW to 35kW (10 powers) | 7 to 20kW (5 powers) | 7kW to 19kW (6 powers) | 4.7kW to 30.9kW (10 powers) |
| | Range of powers (@15°C Air / 26°C Water) | 9.6W to 18.5kW (4 powers) | 6kW to 25kW (10 powers) | 5,5 to 15kW (5 powers) | 4.7kW to 13.5kW (6 powers) | 3.2kW to 22.8kW (10 powers) |
| | Compressor detail | Rotary vane | Rotary vane | Rotary vane | Rotary vane | Rotary vane |
| | Gas type | R32 | R32/R410A | R32 | R32 | R32/R410A |
| Performances comparison at close powers | Power in kW @26°C | 14 kW | 15,9 kW | 13 kW | 14 kW | 14,9 kW |
| | COP @26°C | 13* | 16* | 16,4* | 8,5* | 6,3 |
| | Power in kW @15°C | 9,6 kW | 11 kW | 9 kW | 9,5 kW | 10,7 kW |
| | COP @15°C | 8,5* | 8* | 7,8* | 5,8* | 4,9 |
| | Acoustic power (dB) | Boost: 68 Silent: 54 | Boost: 68 Silent: 54 | Boost: 64 Silent: 51 | Boost: 70 Silent: 61 | 56 |
| | Acoustic pressure (dB) @10m | Boost: 37 Silent: 23 | Boost: 37 Silent: 23 | Boost: 33 Silent: 20 | Boost: 39 Silent: 30 | 25 |
| Mode | Silence mode | ✓ | ✓ | ✓ | ✓ | x |
| | Smart mode | ✓ | ✓ | ✓ | ✓ | x |
| | Boost/Standard mode | ✓ | ✓ | ✓ | ✓ | ✓ |
| Technical features | Defrosting type | Cycle inversion | Cycle inversion | Cycle inversion | Cycle inversion | Cycle inversion |
| | Casing | ABS | ABS | Galvanized steel + ABS top | Galvanized steel | ABS |
| | OTA (over-the-air firmware update) | x | x | x | x | x |
| Ease of use | Heating priority (filtration control) | ✓ | ✓ | ✓ | | |
| | HMI type | LCD and touch buttons | | LCD | LCD | LCD |
| Warranty | Heat Pump | 2 years | 2 years | 2 years | 2 years | 2 years |
| | Compressor | 2 years | 2 years | 2 years | 2 years | 2 years |
| | Condenser (against corrosion) | 2 years | 2 years | 2 years | 2 years | 2 years |
| Accessories | Winter cover | ✓ | ✓ | ✓ | ✓ | ✓ |
| | Condensate drain kit | ✓ | ✓ | ✓ | ✓ | ✓ |
| | Water Connections | 2 x PVC 1/2 union Ø 50 | 2 x PVC 1/2 union Ø 50 | 2 x PVC 1/2 union Ø 50 | 2 x PVC 1/2 union Ø 50 | 2 x PVC 1/2 union Ø 50 |
| | Anti-vibration feet | x 4 | x 4 | x 4 | x 4 | x 4 |
| | Remote control kit | Remote control kit (10m cable) | | | Remote control kit (10m cable) | Remote control kit (10m cable) |
| | 10m Modbus Signal wire | ✓ (to connect the Heat Pump to the Connect Box). | ✓ (to connect the Heat Pump to the Connect Box). | | | |
| | Free mobile app | | ✓ | ✓ | | ✓ |
| | **Optional** | | 1 x remote display kit (new display + 10m wire). | | | |

* @minimum compressor speed

# > CLIMATE ZONES

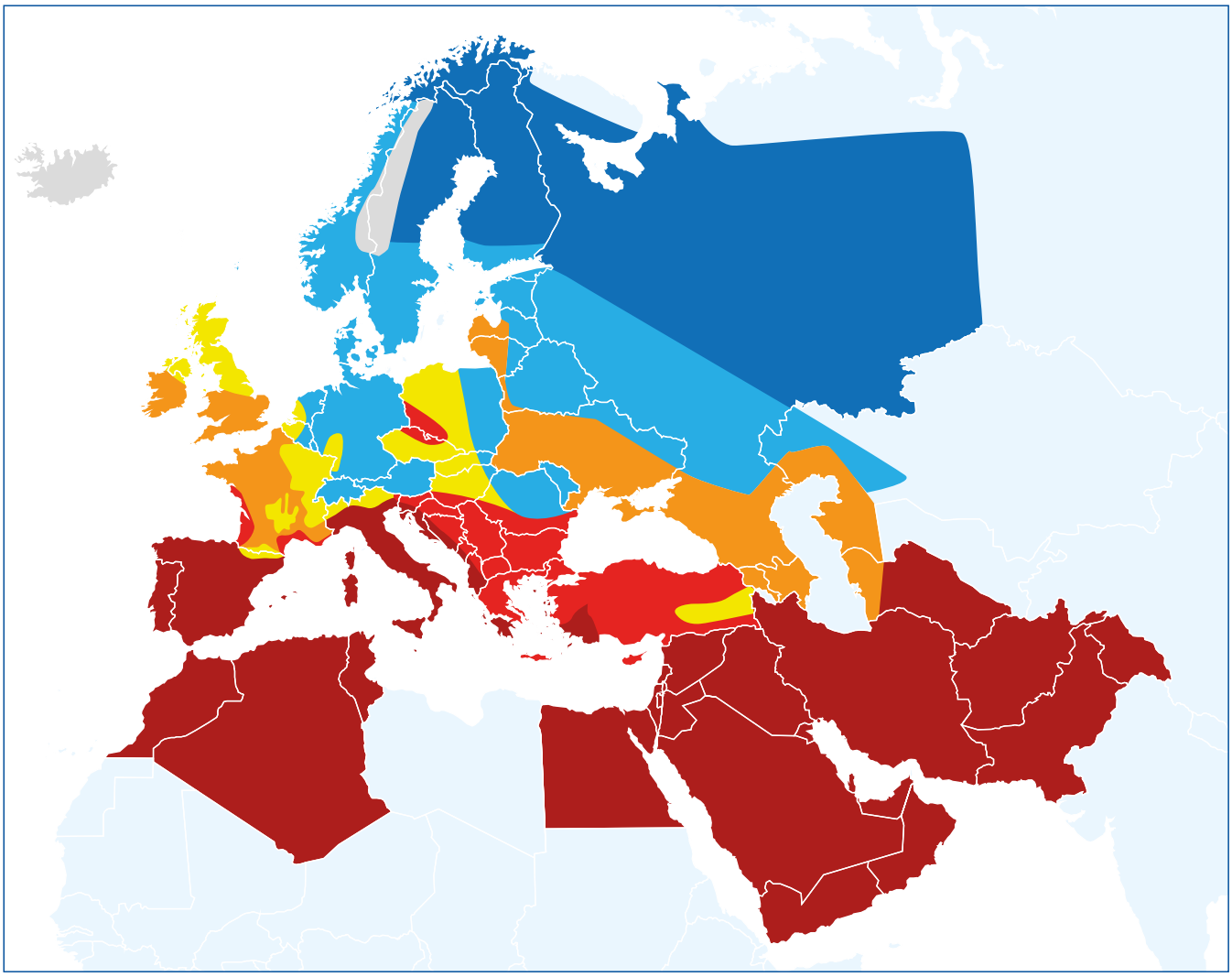

| | |
|---|---|
| Zone 1 | |
| Zone 2 | |
| Zone 3 | |
| Zone 4 | |
| Zone 5 | |
| Zone 6 | |
| Zone 7 | |



## HEAT PUMPS SELECTION GUIDE

This quick selection guide has been configured with the following parameters: private pool, for a use from beginning of may to end of september, average depth 1.5m, 14h filtration time, target pool water temperature 28°C.

**SELECT THE POWER IN LESS THAN 1 MINUTE**

How to read: For a 35m³ pool, with cover, located in zone 2, an Eco Elyo 13 is needed.

## 2024 Ranges WITH COVER

| | | 5 | 10 | 15 | 20 | 25 | 30 | 35 | 40 | 45 | 50 | 55 | 60 | 65 | 70 | 75 | 80 | 85 | 90 | 95 | 100 | 105 | 110 | 115 | 120 | 125 | 130 | 135 | 140 | 145 | 150 | 155 | MAX |
|---|---|---|---|---|---|---|---|---|---|---|---|---|---|---|---|---|---|---|---|---|---|---|---|---|---|---|---|---|---|---|---|---|---|
| Zone 7 | Proelyo Touch | 08 | | | | | | | | | | 10 | | 13 | | 15 | | | | 19 | | | 25 | | | | | | | 30/30T | | | <170m³ PET30/30T <205m³ PET35/35T |
| Zone 7 | Eco Elyo | 07 | | | | | | | | | 09 | | 13 | | | 15 | | | | 20 | | | | | | | | | | | | | |
| Zone 6 | Proelyo Touch | 08 | | | | | | | | 10 | | 13 | | | 15 | | 19 | | | 25 | | | | | | 30/30T | | | | | | 35/35T | <180m³ |
| Zone 6 | Eco Elyo | 07 | | | | | | | | 09 | | 13 | | | 15 | | 20 | | | | | | | | | | | | | | | | |
| Zone 5 | Proelyo Touch | 08 | | | | | | 10 | | | 13 | | 15 | | | 19 | | | 25 | | | | 30/30T | | | | | 35/35T | | | | | |
| Zone 5 | Eco Elyo | 07 | | | | | | 09 | | 13 | | | 15 | | | 20 | | | | | | | | | | | | | | | | | |
| Zone 4 | Proelyo Touch | 08 | | | | | 10 | | 13 | | | 15 | | 19 | | | 25 | | | | 30/30T | | | 35/35T | | | | | | | | | |
| Zone 4 | Eco Elyo | 07 | | | | | 09 | | 13 | | | 15 | | 20 | | | | | | | | | | | | | | | | | | | |
| Zone 3 | Proelyo Touch | 08 | | | | | 10 | | 13 | | 15 | | | 19 | | | 25 | | | | 30/30T | | | 35/35T | | | | | | | | | |
| Zone 3 | Eco Elyo | 07 | | | | | 09 | | 13 | | 15 | | | 20 | | | | | | | | | | | | | | | | | | | |
| Zone 2 | Proelyo Touch | 08 | | | | | 10 | | 13 | | 15 | | | 19 | | | 25 | | | | 30/30T | | | 35/35T | | | | | | | | | |
| Zone 2 | Eco Elyo | 07 | | | | 09 | | | 13 | | 15 | | | 20 | | | | | | | | | | | | | | | | | | | |
| Zone 1 | Proelyo Touch | 08 | | | 10/13 | | 15 | | 19 | | | 25 | | | 30/30T | | | 35/35T | | | | | | | | | | | | | | | |
| Zone 1 | Eco Elyo | 07 | | | 13 | | 15 | | 20 | | | | | | | | | | | | | | | | | | | | | | | | |

## 2024 Ranges WITHOUT COVER

| | | 5 | 10 | 15 | 20 | 25 | 30 | 35 | 40 | 45 | 50 | 55 | 60 | 65 | 70 | 75 | 80 | 85 | 90 | 95 | 100 | 105 | 110 | 115 | 120 | 125 | 130 | 135 | 140 | 145 | 150 | 155 | MAX |
|---|---|---|---|---|---|---|---|---|---|---|---|---|---|---|---|---|---|---|---|---|---|---|---|---|---|---|---|---|---|---|---|---|---|
| Zone 7 | Proelyo Touch | 08 | | | | | 10 | 13 | 15 | | 19 | | | 25 | | | 30/30T | | | 35/35T | | | | | | | | | | | | | |
| Zone 7 | Eco Elyo | 07 | | | | 09 | 13 | | 15 | | 20 | | | | | | | | | | | | | | | | | | | | | | |
| Zone 6 | Proelyo Touch | 08 | | | | 10 | 13 | | 15 | 19 | | 25 | | | 30/30T | | | 35/35T | | | | | | | | | | | | | | | |
| Zone 6 | Eco Elyo | 07 | | | 09 | | 13 | | 15 | 20 | | | | | | | | | | | | | | | | | | | | | | | |
| Zone 5 | Proelyo Touch | 08 | | | 10 | 13 | 15 | | 19 | 25 | | 30/30T | | 35/35T | | | | | | | | | | | | | | | | | | | |
| Zone 5 | Eco Elyo | 07 | | | 09 | 13 | 15 | | 20 | | | | | | | | | | | | | | | | | | | | | | | | |
| Zone 4 | Proelyo Touch | 08 | | | 10 | 13 | 15 | 19 | 25 | | 30/30T | | 35/35T | | | | | | | | | | | | | | | | | | | | |
| Zone 4 | Eco Elyo | 07 | | | 09 | 13 | 15 | 20 | | | | | | | | | | | | | | | | | | | | | | | | | |
| Zone 3 | Proelyo Touch | 08 | | 08/10 | 13 | 15 | 19 | 25 | | 30/30T | 35/35T | | | | | | | | | | | | | | | | | | | | | | |
| Zone 3 | Eco Elyo | 07 | | 09 | 13 | 15 | 20 | | | | | | | | | | | | | | | | | | | | | | | | | | |
| Zone 2 | Proelyo Touch | 08 | | 10/13 | 15 | 19 | 25 | | 30/30T | 35/35T | | | | | | | | | | | | | | | | | | | | | | | |
| Zone 2 | Eco Elyo | 07 | 07/09 | 13 | 15 | 20 | | | | | | | | | | | | | | | | | | | | | | | | | | | |
| Zone 1 | Proelyo Touch | 08 | 10/13 | 15/19 | 25 | 30/30T | 35/35T | | | | | | | | | | | | | | | | | | | | | | | | | | |
| Zone 1 | Eco Elyo | 07/09 | 13 | 15 | 20 | | | | | | | | | | | | | | | | | | | | | | | | | | | | |

Available until end of stock

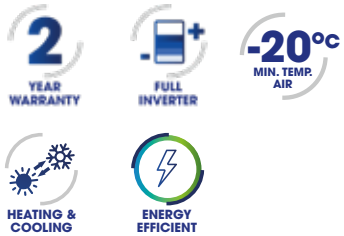


# AstralPool Heat 3

- **Full Inverter technology**
- **Vertical air blowing for increased comfort**
- **-20°C lowest outdoor air working temperature**

## DESCRIPTION

- Vertical Blowing
- ABS plastic casing
- Heating priority mode (filtration pump control)
- DC, variable speed fan
- Automatic cooling mode
- Titanium water exchanger condenser
- Inverter Rotary compressor
- LCD Display detachable

## ACCESSORIES INCLUDED

- Winter Cover
- Condensate drainage kit
- 2 x PVC 1/2 union Ø 50
- 4 x Anti-vibration feet
- 10m cable for Modbus connection
- Remote control kit (10m cable)

## TECHNICAL FEATURES

| Name | APH3-14 | APH3-17 | APH3-21 | APH3-26 |
|---|---|---|---|---|
| Sku Reference | 68837 | 68838 | 68839 | 68840 |
| EN 17645 Rating | A | A | A | A |
| EN 17645 SCOP | 8 | 8 | 8,4 | 8,1 |
| Recommended water flow (m³/h) | 4 | 5 | 6 | 8 |
| Electric Power Supply | 220-240 V / 1 / 50-60 Hz | | | |
| Nominal operating power (A) | 8,1 | 9,8 | 12 | 16 |
| Maximum operating power (A) | 11,5 | 14 | 17 | 22,5 |
| Recommended Power cable size (mm²)* | 3 x 2,5 | 3 x 2,5 | 3 x 4 | 3 x 4 |
| Refrigerant fluid | R32 | R32 | R32 | R32 |
| Refrigerant fluid quantity (kg) | 1,4 | 1,8 | 1,8 | 2,6 |
| Acoustic Power (max-min) (dBA)** | 68 - 54 | 70 - 55 | 70 - 55 | 74 - 56 |
| Acoustic pressure at 10m (max-min) (dBA)** | 37 - 23 | 39 - 24 | 39 - 24 | 43 - 25 |

## HEATING PERFORMANCE

### AIR 26°C / WATER 26°C / HUMID. 80%

| | | | | |
|---|---|---|---|---|
| Operating Power (max-min) (kW) | 14 - 3 | 17 - 3,6 | 21 - 4,6 | 26 - 6 |
| Consumed Power (max-min) (kW) | 2,1 - 0,2 | 2,5 - 0,3 | 3,1 - 0,4 | 3,9 - 0,5 |
| COP | 6,7 - 13 | 6,7 - 13 | 6,7 - 13 | 6,7 - 13 |

### AIR 15°C / WATER 26°C / HUMID. 70%

| | | | | |
|---|---|---|---|---|
| Operating Power (max-min) (kW) | 9,6 - 2,1 | 11,5 - 2,5 | 14,3 - 3,2 | 18,5 - 4,2 |
| Consumed Power (max-min) (kW) | 1,9 - 0,2 | 2,3 - 0,3 | 2,9 - 0,4 | 3,6 - 0,5 |
| COP | 5,1 - 8,5 | 5,1 - 8,5 | 5,1 - 8,5 | 5,1 - 8,5 |

## DIMENSIONS AND WEIGHTS

| | | | | |
|---|---|---|---|---|
| Product Dimensions (Length x Height x Depth) (mm) | 695 x 828 x 800mm | 695 x 828 x 800mm | 900 x 956 x 998mm | 900 x 956 x 998mm |
| Product Weight (kg) | 70kg | 75kg | 92kg | 111kg |

*Cable not provided. Recommended section for maximum length of 20m.
**According to EN60704-1:2010+A11:2012 standard

# ProElyo Touch

- **Full Inverter technology: silent and energy saving**
- **Wide range of powers**
- **- 20°C lowest outdoor air working temperature**

2 YEAR WARRANTY · FULL INVERTER · -20°C MIN. TEMP. AIR · HEATING & COOLING · FLUIDRA POOL · ENERGY EFFICIENT

## DESCRIPTION

- Horizontal Blowing
- Full Inverter Technology with 3 operating modes :
- Boost: Maximum power for quick heating at the beginning of the season
- Smart: Automatic power adjustment between Ecosilence and Boost
- Ecosilence: Greater energy savings and lower noise level
- Connectivity (in option) with free mobile app thanks to iQBridge RS accessory
- ABS plastic casing
- Heating priority mode (filtration pump control)
- Timed mode
- Automatic defrosting
- Titanium water exchanger, compatible with salt water treatment
- Rotary vane compressor
- LCD Display and touch buttons

## ACCESSORIES INCLUDED

- Winter cover
- Condensate drainage kit
- 2 x PVC 1/2 union Ø 50
- 4 x Anti-vibration feet
- 10m cable for Modbus connection

## OPTIONAL ACCESSORIES

- Remote display kit - 74199
- iQBridge RS - 75042

## TECHNICAL FEATURES

| Name | Pro Elyo Touch 08 | Pro Elyo Touch 10 | Pro Elyo Touch 13 | Pro Elyo Touch 15 | Pro Elyo Touch 19 | Pro Elyo Touch 25 | Pro Elyo Touch 30 | Pro Elyo Touch 35 | Pro Elyo Touch 30T | Pro Elyo Touch 35T |
|---|---|---|---|---|---|---|---|---|---|---|
| Sku Reference | 74166 | 74167 | 74168 | 74169 | 74170 | 74171 | 74172 | 74173 | 74174 | 74175 |
| EN 17645 Rating | A | A | A | A | A | A | A | A | A | A |
| EN 17645 SCOP | 7,6 | 7,7 | 7,6 | 7,7 | 7,6 | 7,6 | 7,6 | 7,5 | 7,2 | 7,1 |
| Recommended water flow (m³/h) | 4 | 5 | 6 | 7 | 8 | 10 | 13 | 13 | 13 | 13 |
| Electric Power Supply | 220-240 V / 1 / 50-60 Hz | | | | | | | | 380-400 V / 3 / 50-60 Hz | |
| Nominal operating power (A) | 4,6 | 5,9 | 7,2 | 9,2 | 10,5 | 13,2 | 17 | 22,9 | 7 | 8,4 |
| Maximum operating power (A) | 6,4 | 8,3 | 10 | 13 | 14,7 | 18,5 | 24 | 32 | 9,8 | 11,8 |
| Recommended Power cable size (mm²)* | 3 x 1,5 | 3 x 1,5 | 3 x 2,5 | 3 x 2,5 | 3 x 2,5 | 3 x 4 | 3 x 4 | 3 x 6 | 5 x 2,5 | 5 x 4 |
| Refrigerant fluid | R32 | R32 | R32 | R32 | R32 | R32 | R32 | R32 | R410A | R410A |
| Refrigerant fluid quantity (kg) | 0,65 | 0,7 | 1 | 1,1 | 1,5 | 1,9 | 2 | 2,6 | 3,8 | 4 |
| Acoustic Power (max-min) (dBA)** | 65 - 52 | 66 - 53 | 66 - 44 | 66 - 44 | 68 - 54 | 70 - 65 | 74 - 56 | 74 - 56 | 74 - 56 | 74 - 56 |
| Acoustic pressure at 10m (max-min) (dBA)** | 34 - 21 | 35 - 22 | 35 - 23 | 37 - 23 | 37 - 23 | 39 - 24 | 43 - 25 | 43 - 25 | 43 - 25 | 43 - 25 |

## HEATING PERFORMANCE

### AIR 26°C / WATER 26°C / HUMID. 80%

| | | | | | | | | | | |
|---|---|---|---|---|---|---|---|---|---|---|
| Operating Power (max-min) (kW) | 8,5 - 1,9 | 10,5 - 2,3 | 13,5 - 3 | 15,9 - 3 | 19 - 8 | 25,5 - 6,7 | 30 - 6 | 35 - 8 | 30 - 6 | 35 - 8 |
| Consumed Power (max-min) (kW) | 1,5 - 0,2 | 1,7 - 0,15 | 2,2 - 0,2 | 2,6 - 0,2 | 3,3 - 0,25 | 4,2 - 0,3 | 5 - 0,35 | 5,9 - 0,5 | 5 - 0,35 | 5,9 - 0,5 |
| COP | 5,8 -15 | 6,2 - 16 | 6,2 - 16 | 6 -16 | 6 -16 | 6 -16 | 6 -16 | 6 -16 | 6 -16 | 6 -16 |

### AIR 15°C / WATER 26°C / HUMID. 70%

| | | | | | | | | | | |
|---|---|---|---|---|---|---|---|---|---|---|
| Operating Power (max-min) (kW) | 6 - 2,5 | 7,5 - 2 | 9 - 2 | 11 - 2,5 | 13 - 3 | 17 - 4 | 21 - 5,5 | 25 - 5,5 | 21 - 5,5 | 25 - 5,5 |
| Consumed Power (max-min) (kW) | 1,4 - 0,3 | 1,75 - 0,25 | 2 - 0,25 | 2,5 - 0,3 | 2,9 - 0,4 | 3,9 - 0,5 | 4,6 - 0,7 | 5,4 - 0,7 | 4,6 - 0,7 | 5,4 - 0,7 |
| COP | 4,5 - 8 | 4,5 - 8 | 4,5 - 8 | 4,5 - 8 | 4,5 - 8 | 4,5 - 8 | 4,5 - 8 | 4,5 - 8 | 4,5 - 8 | 4,5 - 8 |

## DIMENSIONS AND WEIGHTS

| | | | | | | | | | | |
|---|---|---|---|---|---|---|---|---|---|---|
| Product Dimensions (Length x Height x Depth) (mm) | 1021 x 588 x 329mm | 1074 x 706 x 448mm | 1074 x 706 x 448mm | 1074 x 706 x 448mm | 1103 x 873 x 454mm | 1103 x 873 x 454mm | 1079 x 1286 x 472mm | 1079 x 1286 x 472mm | 1079 x 1286 x 472mm | 1079 x 1286 x 472mm |
| Product Weight (kg) | 56kg | 68kg | 73kg | 78kg | 98kg | 117kg | 128kg | 130kg | 128kg | 130kg |

*Cable not provided. Recommended section for maximum length of 20m.
**According to EN60704-1:2010+A11:2012 standard

# ECO ELYO

- **Full inverter technology: silent and energy saving**
- **For pools up to 120m³**
- **Embedded connectivity: Free mobile Fluidra Pool app**

2 YEAR WARRANTY · FULL INVERTER · -5°C MIN. TEMP. AIR · HEATING & COOLING · FLUIDRA POOL · ENERGY EFFICIENT

## DESCRIPTION

- Horizontal Blowing
- Full inverter Technology with 3 operating modes :
- Boost: Maximum power for quick heating at the beginning of the season
- Smart: Automatic power adjustment between Ecosilence and Boost
- Ecosilence: Greater energy savings and lower noise level
- Galvanized steel body with ABS top
- Heating priority mode (filtration pump control)
- Timed mode
- Automatic defrosting
- Titanium water exchanger, compatible with salt water treatment
- Rotary vane compressor
- LCD Display

## ACCESSORIES INCLUDED

- Winter cover
- Condensate drain kit
- 2 x PVC 1/2 union Ø 50
- 4 x Anti-vibration feet

## TECHNICAL FEATURES

| Name | ECO ELYO-07 | ECO ELYO-09 | ECO ELYO-13 | ECO ELYO-15 | ECO ELYO-20 |
|---|---|---|---|---|---|
| Sku Reference | 76658 | 76659 | 76660 | 76661 | 76662 |
| EN 17645 Rating | A | A | A | A | A |
| EN 17645 SCOP | 7,5 | 8 | 9,6 | 7,7 | 8,5 |
| Recommended water flow (m³/h) | 3 | 4 | 5 | 6 | 7 |
| Electric Power Supply | 220-240 V / 1 / 50-60 Hz | | | | |
| Nominal operating power (A) | 4,7 | 6 | 8,4 | 10,7 | 14 |
| Maximum operating power (A) | 8 | 9 | 13 | 16 | 17 |
| Recommended Power cable size (mm²)* | 3 x 2,5 | 3 x 2,5 | 3 x 2,5 | 3 x 4 | 3 x 4 |
| Refrigerant fluid | R32 | R32 | R32 | R32 | R32 |
| Refrigerant fluid quantity (kg) | 0,3 | 0,45 | 0,6 | 0,7 | 1 |
| Acoustic Power (max-min) (dBA)** | 59 - 47 | 64 - 51 | 64 - 51 | 68 - 55 | 70 - 57 |
| Acoustic pressure at 10m (max-min) (dBA)** | 28 - 16 | 33 - 20 | 33 - 20 | 36 - 24 | 39 - 26 |

## HEATING PERFORMANCE

### AIR 26°C / WATER 26°C / HUMID. 80%

| | | | | | |
|---|---|---|---|---|---|
| Operating Power (max-min) (kW) | 7 - 2 | 9,5 - 2,3 | 13 - 2,4 | 15 - 2,5 | 20 - 2,8 |
| Consumed Power (max-min) (kW) | 1,1 - 0,1 | 1,4 - 0,2 | 2 - 0,1 | 2,5 - 0,1 | 3,3 - 0,2 |
| COP | 6,5 - 13,4 | 6,7 - 13,5 | 6,5 - 16,4 | 6 - 16,3 | 6,2 - 16,5 |

### AIR 15°C / WATER 26°C / HUMID. 70%

| | | | | | |
|---|---|---|---|---|---|
| Operating Power (max-min) (kW) | 5,5 - 1,4 | 7 - 1,5 | 9 - 1,7 | 11 - 1,9 | 15 - 2,2 |
| Consumed Power (max-min) (kW) | 1,1 - 0,2 | 1,3 - 0,2 | 1,9 - 0,2 | 2,3 - 0,2 | 3 - 0,3 |
| COP | 5,2 - 6,4 | 5,3 - 6,6 | 4,8 - 7,8 | 4,8 - 7,7 | 5 - 7,3 |

## DIMENSIONS AND WEIGHTS

| | | | | | |
|---|---|---|---|---|---|
| Product Dimensions (Length x Height x Depth) (mm) | 831 x 654 x 393mm | 831 x 654 x 393mm | 831 x 654 x 393mm | 914 x 654 x 393mm | 1111 x 754 x 413mm |
| Product Weight (kg) | 38,5kg | 41,5kg | 46kg | 52,5kg | 66kg |

*Cable not provided. Recommended section for maximum length of 20m.
**According to EN60704-1:2010+A11:2012 standard

# Bering Inverter

Available until end of stock

- + Inverter technology: silent and energy saving
- + Heating and Cooling modes
- + -7°C lowest outdoor air working temperature

2 YEAR WARRANTY

-7°C MIN. TEMP. AIR

HEATING & COOLING

ENERGY EFFICIENT

## DESCRIPTION

- Horizontal Blowing
- Galvanized steel casing
- Heating priority mode (filtration pump control)
- 2-speed fan
- Automatic defrosting
- Titanium water exchanger, compatible with salt water treatment
- Rotary vane compressor
- LCD Display detachable

## ACCESSORIES INCLUDED

- Winter Cover
- 4 x Anti-vibration feet
- Condensate drainage kit
- Remote control kit (10m cable)
- 2 x PVC 1/2 union Ø 50

## TECHNICAL FEATURES

| Name | Bering Inverter 7kW | Bering Inverter 9kW | Bering Inverter 11kW | Bering Inverter 14kW | Bering Inverter 16kW | Bering Inverter 20kW |
|---|---|---|---|---|---|---|
| Sku Reference | BEXP07i | BEXP09i | BEXP011i | BEXP14i | BEXP16i | BEXP20i |
| EN 17645 Rating | B | B | B | B | B | B |
| EN 17645 SCOP | 6,4 | 6,6 | 6,4 | 6,4 | 6,7 | 6,4 |
| Recommended water flow (m³/h) | 2,5 | 2,8 | 3,7 | 4 | 4,6 | 5,6 |
| Electric Power Supply | 220-240 V / 1 / 50-60 Hz | | | | | |
| Nominal operating power (A) | 5,9 | 7,2 | 8,7 | 11 | 12,4 | 15 |
| Maximum operating power (A) | 8,5 | 10 | 12,5 | 15,5 | 17 | 21 |
| Recommended Power cable size (mm²) | 3 x 2,5 | 3 x 2,5 | 3 x 2,5 | 3 x 2,5 | 3 x 4 | 3 x 4 |
| Refrigerant fluid | R32 | R32 | R32 | R32 | R32 | R32 |
| Refrigerant fluid quantity (kg) | 0,5 | 0,65 | 0,7 | 0,7 | 1,1 | 1,1 |
| Acoustic Power (max-min) (dBA) | 66 - 59 | 66 - 59 | 68 - 60 | 70 -61 | 72 - 63 | 72 - 63 |
| Acoustic pressure at 10m (max-min) (dBA) | 35 - 28 | 35 - 28 | 37 - 29 | 39 - 30 | 41 - 32 | 41 - 32 |

## HEATING PERFORMANCE

### AIR 26°C / WATER 26°C / HUMID. 80%

| | | | | | | |
|---|---|---|---|---|---|---|
| Operating Power (max-min) (kW) | 7 - 3,3 | 9 - 3,5 | 11 - 4,8 | 14 - 5 | 16 - 5,3 | 19 - 5,7 |
| Consumed Power (max-min) (kW) | 1,3 - 0,4 | 1,6 - 0,4 | 2 - 0,6 | 2,5 - 0,6 | 2,8 - 0,7 | 3,4 - 0,7 |
| COP | 8 - 5,3 | 8,5 - 5,6 | 8,5 - 5,6 | 8,5 - 5,6 | 8,5 - 5,6 | 8,5 - 5,6 |

### AIR 15°C / WATER 26°C / HUMID. 70%

| | | | | | | |
|---|---|---|---|---|---|---|
| Operating Power (max-min) (kW) | 4,7 - 2,4 | 6,3 - 2,5 | 7,8 - 3,4 | 9,5 - 3,5 | 11,2 - 3,6 | 13,5 - 3,9 |
| Consumed Power (max-min) (kW) | 1,2 - 0,4 | 1,6 - 0,4 | 1,9 - 0,6 | 2,4 - 0,6 | 2,8 - 0,6 | 3,4 - 0,7 |
| COP | 5,6 - 4 | 5,8 - 4 | 5,8 - 4 | 5,8 - 4 | 5,8 - 4 | 5,8 - 4 |

## DIMENSIONS AND WEIGHTS

| | | | | | | |
|---|---|---|---|---|---|---|
| Product Dimensions (Length x Height x Depth) (mm) | 1049 x 370 x 551mm | 1049 x 370 x 551mm | 1092 x 450 x 706mm | 1092 x 450 x 706mm | 1092 x 450 x 706mm | 1156 x 450 x 861mm |
| Product Weight (kg) | 54kg | 56kg | 69kg | 73kg | 78kg | 98kg |

*Cable not provided. Recommended section for maximum length of 20m.
**According to EN60704-1:2010+A11:2012 standard

# Evoline

Available until end of stock

- **8 power levels from 4.7 kW to 30.9 kW**
- **Smooth and quiet performance down to 0°C outdoor air temperature**
- **Automatic Heating and Cooling regulation**

2 YEAR WARRANTY

HEATING & COOLING

FLUIDRA POOL

## DESCRIPTION

- Horizontal Blowing
- Heating priority mode (filtration pump control)
- ABS plastic casing
- Automatic defrosting
- Titanium water exchanger, compatible with salt water treatment
- Scroll compressor
- LCD Display detachable

## ACCESSORIES INCLUDED

- Winter Cover
- 4 x Anti-vibration feet
- Condensate drainage kit
- Remote control kit (10m cable)
- 2 x PVC 1/2 union Ø 50

## OPTIONAL ACCESSORIES

- iQBridge RS - 75042

## TECHNICAL FEATURES

| Name | Evoline 6 | Evoline 10 | Evoline 13 | Evoline 15 | Evoline 17 | Evoline 20 | Evoline 25 | Evoline 20T | Evoline 25T | Evoline 35T |
|---|---|---|---|---|---|---|---|---|---|---|
| Sku Reference | 66069-R32 | 66070-R32 | 66071-R32 | 66072-R32 | 67405-R32 | 66073M-R32 | 66074M-MOD | 66073-R32 | 66074-R32 | 66075-R32 |
| EN 17645 Rating | C | C | C | C | C | C | C | C | C | C |
| EN 17645 SCOP | 4,5 | 5 | 4,8 | 4,9 | 5,3 | 4,5 | 5,2 | 5,3 | 5,7 | 5 |
| Recommended water flow (m³/h) | 2,5 | 4,5 | 6 | 7,5 | 9 | 11 | 13 | 11 | 13 | 19 |
| Electric Power Supply | 220-240 V / 1 / 50 Hz | | | | | | | 380-400 V / 3 / 50-60 Hz | | |
| Nominal operating power (A) | 4,1 | 6,2 | 8,9 | 9,7 | 11 | 13,5 | 16,8 | 5,1 | 5,6 | 10,1 |
| Maximum operating power (A) | 5,3 | 8 | 11,6 | 12,6 | 14,2 | 20,3 | 25,2 | 6,7 | 7,3 | 13,6 |
| Recommended Power cable size (mm²)* | 3 x 1,5 | 3 x 2,5 | 3 x 2,5 | 3 x 2,5 | 3 x 2,5 | 3 x 4 | 3 x 4 | 5 x 2,5 | 5 x 2,5 | 5 x 4 |
| Refrigerant fluid | R32 | R32 | R32 | R32 | R32 | R32 | R410A | R32 | R32 | R32 |
| Refrigerant fluid quantity (kg) | 0,4 | 0,75 | 0,9 | 1,1 | 1,15 | 1,1 | 2,3 | 1,1 | 1,45 | 2,2 |
| Acoustic Power (max-min) (dBA)** | 69 | 66 | 66 | 70 | 65 | 73 | 70 | 73 | 74 | 74 |
| Acoustic pressure at 10m (max-min) (dBA)** | 38 | 35 | 35 | 39 | 34 | 42 | 39 | 42 | 43 | 43 |

## HEATING PERFORMANCE

### AIR 26°C / WATER 26°C / HUMID. 80%

| | | | | | | | | | | |
|---|---|---|---|---|---|---|---|---|---|---|
| Operating Power (max-min) (kW) | 4,7 | 7,4 | 10,4 | 11,6 | 14,9 | 17,4 | 22,7 | 18,5 | 22,3 | 30,9 |
| Consumed Power (max-min) (kW) | 0,9 | 1,3 | 1,9 | 2,1 | 2,4 | 2,9 | 3,6 | 3 | 3,2 | 4,9 |
| COP | 5,4 | 5,6 | 5,4 | 5,6 | 6,3 | 5,9 | 6,4 | 6,3 | 6,9 | 6,4 |

### AIR 15°C / WATER 26°C / HUMID. 70%

| | | | | | | | | | | |
|---|---|---|---|---|---|---|---|---|---|---|
| Operating Power (max-min) (kW) | 3,2 | 5,5 | 7,6 | 8,4 | 10,7 | 12,9 | 16,3 | 13,4 | 16,1 | 22,8 |
| Consumed Power (max-min) (kW) | 0,8 | 1,2 | 1,7 | 1,9 | 2,2 | 2,8 | 3,5 | 2,9 | 3,2 | 4,8 |
| COP | 4 | 4,7 | 4,5 | 4,5 | 4,9 | 4,6 | 4,7 | 4,7 | 5 | 4,8 |

## DIMENSIONS AND WEIGHTS

| | | | | | | | | | | |
|---|---|---|---|---|---|---|---|---|---|---|
| Product Dimensions (Length x Height x Depth) (mm) | 798 x 511 x 293mm | 958 x 581 x 360mm | 1015 x 621 x 370mm | 1015 x 621 x 370mm | 1080 x 708 x 416mm | 1080 x 708 x 416mm | 1080 x 708 x 416mm | 1080 x 708 x 416mm | 1080 x 1258 x 446mm | 1080 x 1258 x 446mm |
| Product Weight (kg) | 33kg | 48kg | 54kg | 60kg | 68kg | 92kg | 99kg | 92kg | 103kg | 120kg |

*Cable not provided. Recommended section for maximum length of 20m.
**According to EN60704-1:2010+A11:2012 standard

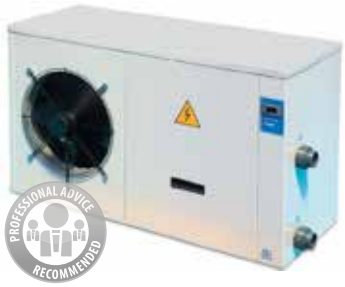


# Alaska

+ Compact model for outdoor installation
+ + 5°C minimum outdoor air temperature

2 YEAR WARRANTY

ON/OFF

+5°C MIN. TEMP. AIR

## DESCRIPTION

- Horizontal Blowing
- For outdoor installation
- +5°C minimum outdoor air temperature.
- LCD display.
- Heating priority (filtration pump control).
- Include Modbus connection.
- Made of non-corrosive magnesium coated aluminium.
- Helicoidal fans with direct coupling motor.
- Defrosting thermostat in evaporator for enhanced performance.
- HP & LP safety pressure switch.
- Water flow switch.
- Condensor made of copper pipe with coated aluminium fins (special for corrosive environments).
- Scroll compressor with carter resistance and deoxidized copper.
- Thermostatic expansion valve.
- Titanium evaporator with PVC shell and in G2 titanium coil according to ASTM B 338.99 standard.
- Guaranteed against corrosion.
- Anti-acid dehydrating filter.
- Fan mounted vertically for Alaska 10/15/17.

## TECHNICAL FEATURES

| Name | ALASKA-4 | ALASKA-6 | ALASKA-8 | ALASKA-10 | ALASKA-15 | ALASKA-17 |
|---|---|---|---|---|---|---|
| Sku Reference | 32535-M0B | 32536-M0B | 32537-M0B | 32538-M0B | 32540-M0B | 32541-M0B |
| Recommended water flow (m³/h) | 6 - 10 | 6 - 10 | 7 - 12 | 7 - 12 | 10 - 15 | 10 - 15 |
| Electric Power Supply | 220-240 V / 1 / 50 Hz | 220-240 V / 1 / 50 Hz | 380-400 V / 3 / 50 Hz | 380-400 V / 3 / 50 Hz | 380-400 V / 3 / 50 Hz | 380-400 V / 3 / 50 Hz |
| Air Flow (m³/h) | 3800 | 4900 | 5500 | 9800 | 11000 | 11000 |
| Refrigerant fluid | R407C | R407C | R407C | R407C | R407C | R407C |
| Refrigerant fluid quantity (kg) | 2 | 4,3 | 4,8 | 5,5 | 6,3 | 6,6 |

## COOLING PERFORMANCE

AIR 27°C / WATER 12°C

| | | | | | | |
|---|---|---|---|---|---|---|
| Cooling capacity (kW) | 4,4kW | 5,7kW | 8,9kW | 10,7kW | 16,6kW | 22,7kW |
| Power Consumption (kW) | 1,3kW | 2kW | 2,8kW | 3,6kW | 5kW | 6,6kW |
| Cooling EER | 3,3 | 2,9 | 3,1 | 3 | 3,4 | 3,5 |

## DIMENSIONS AND WEIGHTS

| | | | | | | |
|---|---|---|---|---|---|---|
| Product Dimensions (Length x Height x Depth) (mm) | 1311 (+80) x 746 x 512mm | L 1311 (+80) x 746 x 540mm | L 1411 (+80) x 846 x 556mm | L 1372 (+80) x 890 x 650mm | L 1728 (+80) x 866 x 708mm | |
| Product Weight (kg) | 80kg | 92kg | 102kg | 133kg | 167kg | 197kg |

*Cable not provided. Recommended section for maximum length of 20m.
**According to EN60704-1:2010+A11:2012 standard

# Siberia

+ Compact model for indoor installation
+ + 5°C minimum outdoor air temperature

2 YEAR WARRANTY

ON/OFF

+5°C MIN. TEMP. AIR

## DESCRIPTION

- Horizontal Blowing
- For indoor installation
- +5°C minimum outdoor air temperature.
- LCD display.
- Heating priority (filtration pump control).
- Include Modbus connection.
- Made of non-corrosive magnesium coated aluminium.
- Centrifugal fan
- Defrosting thermostat in evaporator for enhanced performance.
- HP & LP safety pressure switch.
- Water flow switch.
- Condensor made of copper pipe with coated aluminium fins (special for corrosive environments).
- Scroll compressor with carter resistance and deoxidized copper.
- Thermostatic expansion valve.
- Titanium evaporator with PVC shell and in G2 titanium coil according to ASTM B 338.99 standard.
- Guaranteed against corrosion.
- Anti-acid dehydrating filter.

## TECHNICAL FEATURES

| Name | SIBERIA-6 | SIBERIA-4 | SIBERIA-15 | SIBERIA-17 | SIBERIA-8 | SIBERIA-10 |
|---|---|---|---|---|---|---|
| Sku Reference | 33302-M0B | 33301-M0B | 33306-M0B | 33307-M0B | 33303-M0B | 33304-M0B |
| Recommended water flow (m³/h) | 6 - 10 | 6 - 10 | 10 - 15 | 10 - 15 | 7 - 12 | 7 - 12 |
| Electric Power Supply | 220-240 V / 1 / 50 Hz | 220-240 V / 1 / 50 Hz | 380-400 V / 3 / 50 Hz | 380-400 V / 3 / 50 Hz | 380-400 V / 3 / 50 Hz | 380-400 V / 3 / 50 Hz |
| Air Flow (m³/h) | 4900 | 3800 | 11000 | 11000 | 5500 | 9800 |
| Refrigerant fluid | R407C | R407C | R407C | R407C | R407C | R407C |
| Refrigerant fluid quantity (kg) | 4,3 | 2 | 6,3 | 6,6 | 4,8 | 5,5 |

## COOLING PERFORMANCE

AIR 27°C / WATER 12°C

| | | | | | | |
|---|---|---|---|---|---|---|
| Cooling capacity (kW) | 5,7kW | 4,4kW | 16,6kW | 22,7kW | 8,9kW | 10,7kW |
| Power Consumption (kW) | 2,3kW | 1,8kW | 7,7kW | 9,3kW | 3,2kW | 4,5kW |
| Cooling EER | 2,5 | 2,4 | 2,2 | 2,5 | 2,8 | 2,4 |

## DIMENSIONS AND WEIGHTS

| | | | | | | |
|---|---|---|---|---|---|---|
| Product Dimensions (Length x Height x Depth) (mm) | L 1311 (+80) x 746 x 700 (+50)mm | L 1311 (+80) x 746 x 550 (+50)mm | L 1728 (+80) x 866 x 655 (+50)mm | | L 1411 (+80) x 846 x 750 (+50)mm | L 1372 (+80) x 890 x 655 (+50)mm |
| Product Weight (kg) | 112kg | 97kg | 219kg | 224kg | 120kg | 188kg |

*Cable not provided. Recommended section for maximum length of 20m.
**According to EN60704-1:2010+A11:2012 standard

# > WEIGHTS AND DIMENSIONS

For complete technical & dimensional details, refer to the datasheet/user manual.

## ASTRALPOOL HEAT 3 - WEIGHT AND DIMENSIONS

| Model | APH3-14 | APH3-17 | APH3-21 | APH3-26 |
|---|---|---|---|---|
| Weight | 70 kg | 75 kg | 92 kg | 111 kg |
| A | 820 mm | | 950 mm | |
| B | 830 mm | | 1025 mm | |
| C | 695 mm | | 900 mm | |
| D | 130 mm | | 130 mm | |
| E | 470 mm | | 660 mm | |

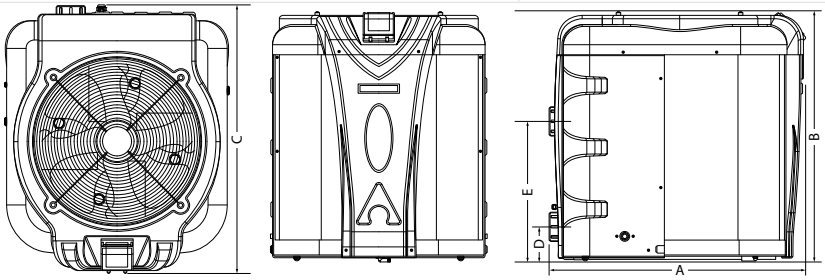


## PRO ELYO TOUCH - WEIGHT AND DIMENSIONS

| Model | PET-08 | PET-10 | PET-13 | PET-15 | PET-19 | PET-25 | PET-30 | PET-35 | PET-30T | PET-35T |
|---|---|---|---|---|---|---|---|---|---|---|
| Weight | 56 kg | 68 kg | 73 kg | 78 kg | 98 kg | 117 kg | 128 kg | 130 kg | 128 kg | 130 kg |
| A | 10081 mm | 1050 mm | | | 1050 mm | | 1050 mm | | | |
| B | 5771 mm | 709 mm | | | 870 mm | | 1285 mm | | | |
| C | 3801 mm | 440 mm | | | 450 mm | | 460 mm | | | |
| D | 111.51 mm | 101 mm | | | 111.5 mm | | 111.5 mm | | | |
| E | 411.51 mm | 4911 mm | | | 711.51 mm | | 911.51 mm | | | |

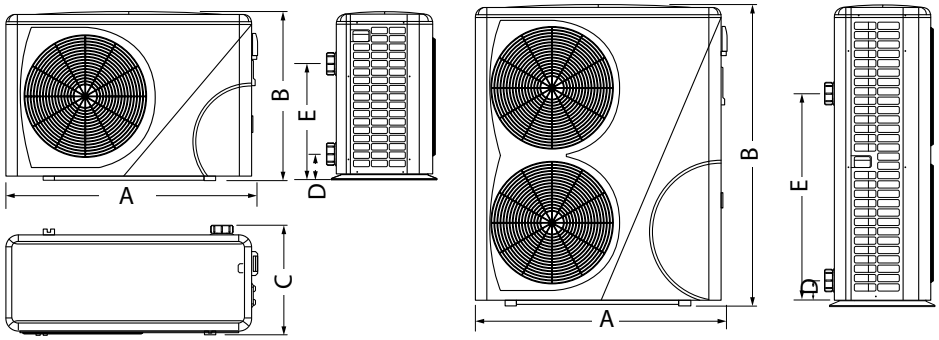


## ECO ELYO - WEIGHT AND DIMENSIONS

| Model | ECO ELYO-07/09 | ECO ELYO-13 | ECO ELYO-15 | ECO ELYO-20 |
|---|---|---|---|---|
| A | 654 mm | | | 754 mm |
| B | 831 mm | | 914 mm | 111 mm |
| C | 348 mm | | | 368 mm |
| D | 590 mm | | 593 mm | 790 mm |
| E | 393 mm | | | 413 mm |
| F | 300 mm | 260 mm | 330 mm | 350 mm |
| G | 93 mm | 103 mm | 93 mm | 93 mm |

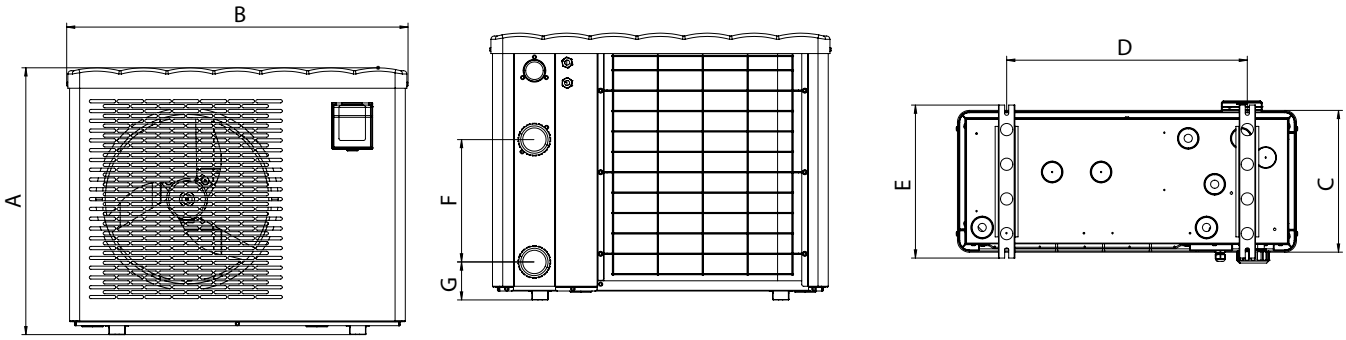

## BERING INVERTER - WEIGHT AND DIMENSIONS

| Model | Bering Inverter 7kW | Bering Inverter 9kW | Bering Inverter 11kW | Bering Inverter 14kW | Bering Inverter 16kW | Bering Inverter 20kW |
|---|---|---|---|---|---|---|
| Weight | 54 kg | 56 kg | 68 kg | 73 kg | 78 kg | 98 kg |

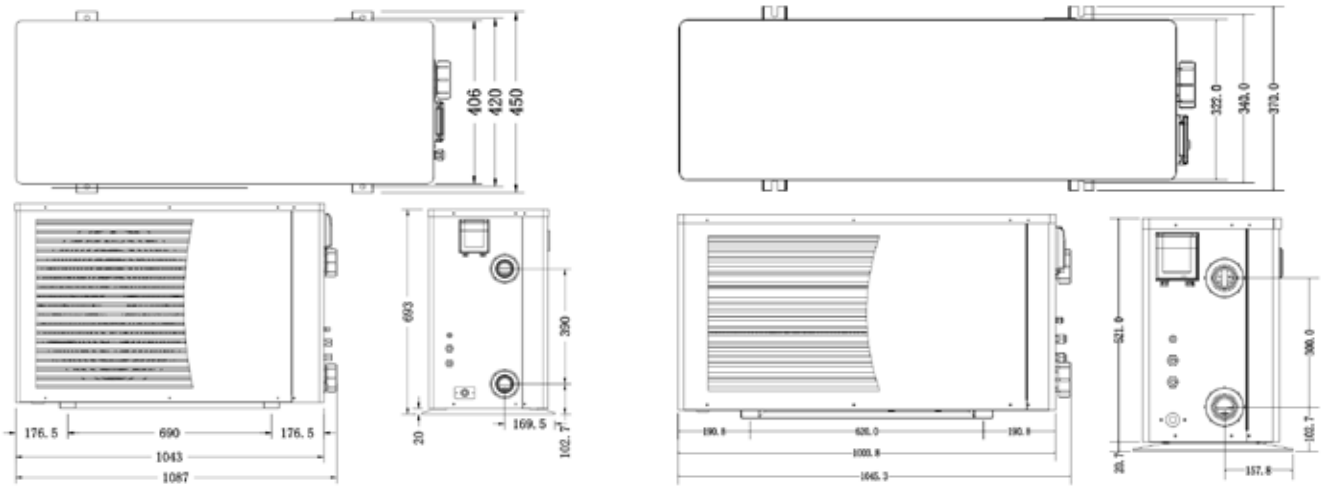


Dimensions = mm

## EVOLINE - WEIGHT AND DIMENSIONS

| Model | Evoline 6 | Evoline 10 | Evoline 13 | Evoline 15 | Evoline 17 | Evoline 20 | Evoline 25 | Evoline 20T | Evoline 25T | Evoline 35T |
|---|---|---|---|---|---|---|---|---|---|---|
| Weight | 33 kg | 48 kg | 54 kg | 60 kg | 68 kg | 92 kg | 99 kg | 92 kg | 103 kg | 120 kg |
| A | 798 mm | 958 mm | 1015 mm | | 1080 mm | | | | | 1080 mm |
| B | 511 mm | 581 mm | 621 mm | | 708 mm | | | | | 1258 mm |
| C | 293 mm | 360 mm | 370 mm | | 416 mm | | | | | 446 mm |
| D | 100 mm | 115 mm | 111 mm | | 98.5 mm | 99 mm | | | | |
| E | 335 mm | 365 mm | 411 mm | | 498.5 mm | 499 mm | | 599 mm | | 819 mm |

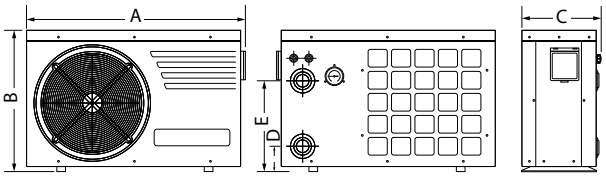


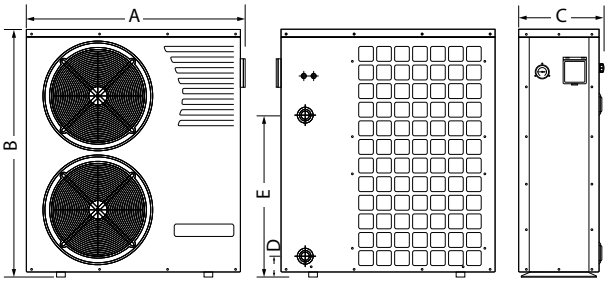


## CHILLERS ASLASKA & SIBERIA - WEIGHT AND DIMENSIONS

| Model | ALASKA-4 | ALASKA-6 | ALASKA-8 | ALASKA-10 | ALASKA-15 | ALASKA-17 |
|---|---|---|---|---|---|---|
| Weight | 80 kg | 92 kg | 102 kg | 133 kg | 167 kg | 197 kg |
| A | 1311 (+80) mm | | 1411 (+80) mm | 1372 (+80) mm | 1728 (+80) mm | |
| B | 512 mm | 540 mm | 556 mm | 650 mm | 708 mm | |
| C | 746 mm | | 846 mm | 890 mm | 866 mm | |
| **Model** | **SIBERIA-4** | **SIBERIA-6** | **SIBERIA-8** | **SIBERIA-10** | **SIBERIA-15** | **SIBERIA-17** |
| Weight | 97 kg | 112 kg | 120 kg | 188 kg | 219 kg | 224v |
| A | 1311 (+80) mm | | 1411 (+80) | 1372 (+80) mm | 1728 (+80) mm | |
| B | 550+50 mm | 700+50 mm | | 655+50 | 655+50 mm | |
| C | 746 mm | | 846 mm | 890 mm | 866 mm | |

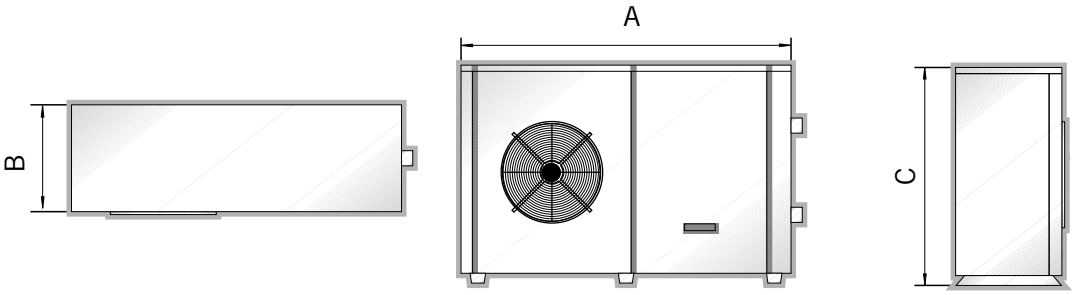

# > COMPARATIVE TABLE

| | | | | | |
|---|---|---|---|---|---|
| | Range | VSN | VSP | FSN | FSP |
| | Professional advice recommended | ✓ | ✓ | ✓ | ✓ |
| Key drivers for a fast pre-selection | Min Air T°C | -5°C | +7°C | -5°C | +7°C |
| | Seasonality | Extended season | Season | Extended season | Season |
| | Technology | INVERTER | FULL INVERTER | ON/OFF | ON/OFF |
| | Cooling mode | ✓ | ✓ | ✓ | ✓ |
| | App control (wifi) | x | x | x | x |
| | Air blowing type | Horizontal | Horizontal | Horizontal | Horizontal |
| | Free area around the heat pump | ++ | ++ | ++ | ++ |
| | Electric power supply | Single-phase | Single-phase | Single-phase | Single-phase |
| | Can be installed indoor | x | x | x | x |
| Performances | Range of powers (@26°C Air / 26°C Water) | 10 to 21kW (5 powers) | 10 to 17kW (4 powers) | 5 to 16,5kW (5 powers) | 5 to 14kW (4 powers) |
| | Range of powers (@15°C Air / 26°C Water) | 7 to 15kW (5 powers) | 7 to 12kW (4 powers) | 3,5 to 11,5kW (5 powers) | 3,5 to 9,5kW (4 powers) |
| | Compressor detail | Rotary vane | Rotary vane | Rotary vane | Rotary vane |
| | Gas type | R32 | R32 | R32 | R32 |
| Performances comparison at close powers | Power in kW @26°C | 15 kW | 15 kW | 14 kW | 14 kW |
| | COP @26°C | 8,5* | 16* | 5,4 | 5,4 |
| | Power in kW @15°C | 10 kW | 10 kW | 9,5 | 9,5 |
| | COP @15°C | 5,8* | 7,2* | 4,2 | 4,2 |
| | Acoustic power (dB) | Boost: 70<br>Silent: 61 | Boost: 69<br>Silent: 54 | 68 | 68 |
| | Acoustic pressure (dB) @10m | Boost: 39<br>Silent: 30 | Boost: 37<br>Silent: 23 | 37 | 37 |
| Mode | Silence mode | ✓ | ✓ | x | x |
| | Smart mode | ✓ | ✓ | x | x |
| | Boost/Standard mode | ✓ | ✓ | ✓ | ✓ |
| Technical features | Defrosting type | Cycle inversion | Forced ventilation | Cycle inversion | Forced ventilation |
| | Casing | Galvanized steel + ABS top | Galvanized steel + ABS top | Galvanized steel + ABS top | Galvanized steel + ABS top |
| | OTA (over-the-air firmware update) | x | x | x | x |
| Ease of use | Heating priority (filtration control) | ✓ | ✓ | ✓ | x |
| | HMI type | x | LCD | LCD | LCD |
| Warranty | Heat Pump | 2 years | 2 years | 2 years | 2 years |
| | Compressor | 2 years | 2 years | 2 years | 2 years |
| | Condenser (against corrosion) | 2 years | 2 years | 2 years | 2 years |
| Included Accessories | Winter cover | ✓ | ✓ | ✓ | ✓ |
| | Condensate drain kit | ✓ | ✓ | ✓ | ✓ |
| | Water Connections | 2 x PVC 1/2 union Ø 50 | 2 x PVC 1/2 union Ø 50 | 2 x PVC 1/2 union Ø 50, by compression (without glue) | 2 x PVC 1/2 union Ø 50, by compression (without glue) |
| | Anti-vibration feet | x 4 | x 4 | x 4 | x 4 |
| | Remote control kit | ✓ (10m cable) | | | ✓ (10m cable) |

* @minimum compressor speed

| | Range | VSN V2 | FSN V2 |
|---|---|---|---|
| | | | |
| | Professional advice recommended | ✓ | ✓ |
| Key drivers for a fast pre-selection | Min Air T°C | -5°C | -5°C |
| | Seasonality | Extended season | Extended season |
| | Technology | FULL INVERTER | ON/OFF |
| | Cooling mode | ✓ | ✓ |
| | App control (wifi) | x | x |
| | Air blowing type | Horizontal | Horizontal |
| | Free area around the heat pump | ++ | ++ |
| | Electric power supply | Single-phase | Single-phase |
| | Can be installed indoor | x | x |
| Performances | Range of powers (@26°C Air / 26°C Water) | 7 to 20kW (5 powers) | 8 to 15kW (4 powers) |
| | Range of powers (@15°C Air / 26°C Water) | 5,5 to 15kW (5 powers) | 6 to 11kW (4 powers) |
| | Compressor detail | Rotary vane | Rotary vane |
| | Gas type | R32 | R32 |
| Performances comparison at close powers | Power in kW @26°C | 13 kW | 12 kW |
| | COP @26°C | 16,4* | 5,5 |
| | Power in kW @15°C | 9 kW | 9 kW |
| | COP @15°C | 7,8* | 4,7 |
| | Acoustic power (dB) | Boost: 64<br>Silent: 51 | 67 |
| | Acoustic pressure (dB) @10m | Boost: 33<br>Silent: 20 | 36 |
| Mode | Silence mode | ✓ | x |
| | Smart mode | ✓ | x |
| | Boost/Standard mode | ✓ | ✓ |
| Technical features | Defrosting type | Cycle inversion | Cycle inversion |
| | Casing | Galvanized steel + ABS top | Galvanized steel + ABS top |
| | OTA (over-the-air firmware update) | x | x |
| Ease of use | Heating priority (filtration control) | ✓ | ✓ |
| | HMI type | LCD | |
| Warranty | Heat Pump | 2 years | |
| | Compressor | 2 years | |
| | Condenser (against corrosion) | 2 years | |
| Included Accessories | Winter cover | ✓ | |
| | Condensate drain kit | ✓ | |
| | Water Connections | 2 x PVC 1/2 union Ø 50 | |
| | Anti-vibration feet | x 4 | |
| | Remote control kit | ✓ (10m cable) | |

* @minimum compressor speed

AQUA SPHERE

HEAT PUMPS

# VSN

Available until end of stock

- + Inverter technology: silent and energy saving
- + For pools up to 120m³
- + -5°C minimum air operating temperature

2 YEAR WARRANTY

-5°C MIN. TEMP. AIR

HEATING & COOLING

ENERGY EFFICIENT

## DESCRIPTION

- Horizontal Blowing
- Inverter Technology with 3 operating modes :
- Boost: Maximum power for quick heating at the beginning of the season
- Smart: Automatic power adjustment between Ecosilence and Boost
- Ecosilence: Greater energy savings and lower noise level
- Galvanized steel body with ABS top
- Heating priority mode (filtration pump control)
- Timed mode
- Automatic defrosting
- Titanium water exchanger, compatible with salt water treatment
- Rotary vane compressor
- LCD Display

## ACCESSORIES INCLUDED

- Remote control kit (10m cable)
- 2 x PVC 1/2 union Ø 50
- Winter cover
- 4 x Anti-vibration feet
- Condensate drain kit

## TECHNICAL FEATURES

| Name | VSN-10 | VSN-12 | VSN-15 | VSN-17 | VSN-21 |
|---|---|---|---|---|---|
| Sku Reference | 74152 | 74153 | 74154 | 74155 | 74156 |
| EN 17645 Rating | B | B | B | B | B |
| EN 17645 SCOP | 6,5 | 6,6 | 6,6 | 6,6 | 6,6 |
| Recommended water flow (m³/h) | 2,8 | 3,7 | 4 | 4,6 | 5 |
| Electric Power Supply | 220-240 V / 1 / 50 Hz | | | | |
| Nominal operating power (A) | 7,2 | 8,7 | 11 | 11,9 | 15 |
| Recommended Power cable size (mm²)* | 3 x 2,5 | 3 x 2,5 | 3 x 2,5 | 3 x 2,5 | 3 x 2,5 |
| Refrigerant fluid | R32 | R32 | R32 | R32 | R32 |
| Refrigerant fluid quantity (kg) | 0,65 | 0,75 | 0,95 | 1,1 | 1,5 |
| Acoustic Power (max-min) (dBA)** | 66 - 59 | 68 - 60 | 70 - 61 | 70 - 61 | 73 - 64 |
| Acoustic pressure at 10m (max-min) (dBA)** | 35 - 28 | 37 - 29 | 39 - 30 | 39 - 30 | 41 - 32 |

## HEATING PERFORMANCE

### AIR 26°C / WATER 26°C / HUMID. 80%

| | | | | | |
|---|---|---|---|---|---|
| Operating Power (max-min) (kW) | 10 - 3,5 | 12 - 4,8 | 15 - 5 | 17 - 5,3 | 21 - 4,7 |
| Consumed Power (max-min) (kW) | 1,6 - 0,4 | 2 - 0,6 | 2,5 - 0,6 | 2,9 - 0,7 | 3,4 - 0,6 |
| COP | 6,2 - 8,5 | 6,1 - 8,5 | 6 - 8,5 | 6 - 8,5 | 6,2 - 8,5 |

### AIR 15°C / WATER 26°C / HUMID. 70%

| | | | | | |
|---|---|---|---|---|---|
| Operating Power (max-min) (kW) | 7 - 2,5 | 8,5 - 3,5 | 10 - 3,6 | 12 - 3,8 | 15 - 3,9 |
| Consumed Power (max-min) (kW) | 1,7 - 0,4 | 2 - 0,6 | 2,4 - 0,6 | 2,8 - 0,7 | 3,5 - 0,7 |
| COP | 4,2 - 5,8 | 4,3 - 5,8 | 4,2 - 5,8 | 4,3 - 5,8 | 4,2 - 5,8 |

## DIMENSIONS AND WEIGHTS

| | | | | | |
|---|---|---|---|---|---|
| Product Dimensions (Length x Height x Depth) (mm) | 862 x 590 x 395mm | 987 x 689 x 415mm | 987 x 689 x 415mm | 987 x 689 x 415mm | 1074 x 889 x 463mm |
| Product Weight (kg) | 56kg | 68kg | 73kg | 78kg | 98kg |

*Cable not provided. Recommended section for maximum length of 20m.
**According to EN60704-1:2010+A11:2012 standard

AQUA SPHERE

# VSP

Available until end of stock

- + Full Inverter technology: silent and energy saving
- + For pools up to 95m³
- + + 7°C minimum air operating temperature

2 YEAR WARRANTY · FULL INVERTER · +7°C MIN. TEMP. AIR · HEAT ONLY · ENERGY EFFICIENT

## DESCRIPTION

- Horizontal Blowing
- Full inverter Technology with 3 operating modes :
- Boost: Maximum power for quick heating at the beginning of the season
- Smart: Automatic power adjustment between Ecosilence and Boost
- Ecosilence: Greater energy savings and lower noise level
- Galvanized steel body with ABS top
- Heating priority mode (filtration pump control)
- Timed mode
- Automatic defrosting
- Titanium water exchanger, compatible with salt water treatment
- Rotary vane compressor
- Included 3.5m power cable (without plug) except VSP-17
- LCD Display

## ACCESSORIES INCLUDED

- Winter cover
- Condensate drain kit
- 2 x PVC 1/2 union Ø 50
- 4 x Anti-vibration feet
- Remote control kit (10m cable)

## TECHNICAL FEATURES

| Name | VSP-10 | VSP-12 | VSP-15 | VSP-17 |
|---|---|---|---|---|
| Sku Reference | 74148 | 74149 | 74150 | 74151 |
| EN 17645 Rating | A | A | A | A |
| EN 17645 SCOP | 7 | 7,1 | 7 | 7 |
| Recommended water flow (m³/h) | 2,8 | 3,7 | 4 | 4,6 |
| Electric Power Supply | 220-240 V / 1 / 50 Hz | | | |
| Nominal operating power (A) | 6,9 | 7,9 | 10 | 11,8 |
| Recommended Power cable size (mm²)* | 3 x 2,5 | 3 x 2,5 | 3 x 2,5 | 3 x 2,5 |
| Refrigerant fluid | R32 | R32 | R32 | R32 |
| Refrigerant fluid quantity (kg) | 0,4 | 0,75 | 1 | 1,1 |
| Acoustic Power (max-min) (dBA)** | 66 - 54 | 66 - 54 | 68 - 54 | 68 - 55 |
| Acoustic pressure at 10m (max-min) (dBA)** | 34- 22 | 35 - 23 | 37 - 23 | 37 - 24 |

## HEATING PERFORMANCE

### AIR 26°C / WATER 26°C / HUMID. 80%

| | | | | |
|---|---|---|---|---|
| Operating Power (max-min) (kW) | 10 - 2,3 | 12 - 2,9 | 15 - 3,2 | 17 - 3,8 |
| Consumed Power (max-min) (kW) | 1,6 - 0,1 | 1,8 - 0,2 | 2,3 - 0,2 | 2,7 - 0,2 |
| COP | 6,5 - 16 | 6,8 - 16 | 6,6 - 16 | 6,4 - 16 |

### AIR 15°C / WATER 26°C / HUMID. 70%

| | | | | |
|---|---|---|---|---|
| Operating Power (max-min) (kW) | 7 - 1,9 | 8,5 - 2 | 10 - 2,2 | 12 - 3 |
| Consumed Power (max-min) (kW) | 1,4 - 0,3 | 1,7 - 0,3 | 2,1 - 0,3 | 2,4 - 0,4 |
| COP | 4,9 - 7,1 | 4,9 - 7,2 | 4,8 - 7,2 | 4,9 - 7,2 |

## DIMENSIONS AND WEIGHTS

| | | | | |
|---|---|---|---|---|
| Product Dimensions (Length x Height x Depth) (mm) | 862 x 590 x 395mm | 897 x 689 x 415mm | 897 x 689 x 415mm | 897 x 689 x 415mm |
| Product Weight (kg) | 56kg | 68kg | 73kg | 78kg |

*Cable not provided. Recommended section for maximum length of 20m.
**According to EN60704-1:2010+A11:2012 standard

AQUA SPHERE

Available until end of stock

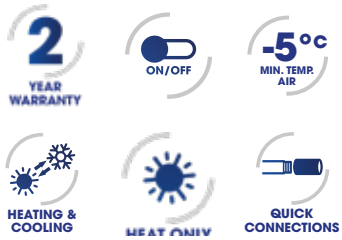


HEAT PUMPS

# FSN

+ Simple use
+ For pools up to 90m³
+ -5°C minimum air operating temperature

## DESCRIPTION

- Horizontal Blowing
- Galvanized steel body with ABS top
- Heating priority mode (filtration pump control)
- Timed mode
- Automatic defrosting
- Titanium water exchanger, compatible with salt water treatment
- Rotary vane compressor
- Included 3.5m power cable (without plug) except FSN-17
- LCD Display

## ACCESSORIES INCLUDED

- Winter cover
- Condensate drain kit
- 2 x PVC 1/2 union Ø 50
- 4 x Anti-vibration feet
- Remote control kit (10m cable)

## TECHNICAL FEATURES

| Name | FSN-05 | FSN-08 | FSN-11 | FSN-14 | FSN-17 |
|---|---|---|---|---|---|
| Sku Reference | 74143 | 74144 | 74145 | 74146 | 74147 |
| EN 17645 Rating | C | C | C | C | C |
| EN 17645 SCOP | 4,4 | 4,7 | 5,1 | 4,9 | 5,5 |
| Recommended water flow (m³/h) | 3 | 4 | 5 | 6 | 7 |
| Electric Power Supply | 220-240 V / 1 / 50 Hz | | | | |
| Nominal operating power (A) | 4,4 | 6,2 | 9,8 | 11,5 | 12,8 |
| Recommended Power cable size (mm²)* | 3 x 2,5 | 3 x 1,5 | 3 x 2,5 | 3 x 2,5 | 3 x 2,5 |
| Refrigerant fluid | R32 | R32 | R32 | R32 | R32 |
| Refrigerant fluid quantity (kg) | 0,4 | 0,6 | 0,9 | 0,9 | 0,95 |
| Acoustic Power (max-min) (dBA)** | 62 | 64 | 66 | 68 | 68 |
| Acoustic pressure at 10m (max-min) (dBA)** | 31 | 32 | 35 | 37 | 37 |

## HEATING PERFORMANCE

### AIR 26°C / WATER 26°C / HUMID. 80%

| | | | | | |
|---|---|---|---|---|---|
| Operating Power (max-min) (kW) | 5 | 7,5 | 11 | 14 | 16,5 |
| Consumed Power (max-min) (kW) | 1 | 1,4 | 2,2 | 2,6 | 2,9 |
| COP | 5 | 5,4 | 5 | 5,4 | 5,7 |

### AIR 15°C / WATER 26°C / HUMID. 70%

| | | | | | |
|---|---|---|---|---|---|
| Operating Power (max-min) (kW) | 3,5 | 5,5 | 7,5 | 9,5 | 11,5 |
| Consumed Power (max-min) (kW) | 0,9 | 1,3 | 1,8 | 2,3 | 2,5 |
| COP | 4 | 4,4 | 4,3 | 4,2 | 4,6 |

## DIMENSIONS AND WEIGHTS

| | | | | | |
|---|---|---|---|---|---|
| Product Dimensions (Length x Height x Depth) (mm) | 800 x 519 x 361mm | 978 x 566 x 396mm | 978 x 566 x 396mm | 1096 x 704 x 433mm | 1096 x 704 x 433mm |
| Product Weight (kg) | 36kg | 46kg | 65kg | 72kg | 76kg |

*Cable not provided. Recommended section for maximum length of 20m.
**According to EN60704-1:2010+A11:2012 standard

AQUA SPHERE

Available until end of stock

# FSP

- + Simple use
- + For pools up to 75m³
- + + 7°C minimum air operating temperature

## DESCRIPTION

- Horizontal Blowing
- Galvanized steel body with ABS top
- Heating priority mode (filtration pump control)
- Timed mode
- Automatic defrosting
- Titanium water exchanger, compatible with salt water treatment
- Rotary vane compressor
- Included 3.5m power cable (without plug)
- LCD Display

## ACCESSORIES INCLUDED

- Winter cover
- Condensate drain kit
- 2 x PVC 1/2 union Ø 50, by compression (without glue)
- 4 x Anti-vibration feet

## TECHNICAL FEATURES

| Name | FSP-05 | FSP-08 | FSP-11 | FSP-14 |
|---|---|---|---|---|
| Sku Reference | 74139 | 74140 | 74141 | 74142 |
| EN 17645 Rating | C | C | C | C |
| EN 17645 SCOP | 4 | 4,3 | 5 | 5,3 |
| Recommended water flow (m³/h) | 3 | 4 | 5 | 6 |
| Electric Power Supply | 220-240 V / 1 / 50 Hz | | | |
| Nominal operating power (A) | 4,4 | 6,2 | 9,8 | 11,5 |
| Recommended Power cable size (mm²)* | 3 x 1,5 | 3 x 1,5 | 3 x 2,5 | 3 x 2,5 |
| Refrigerant fluid | R32 | R32 | R32 | R32 |
| Refrigerant fluid quantity (kg) | 0,4 | 0,45 | 0,8 | 0,85 |
| Acoustic Power (max-min) (dBA)** | 63 | 65 | 68 | 68 |
| Acoustic pressure at 10m (max-min) (dBA)** | 32 | 33 | 37 | 37 |

## HEATING PERFORMANCE

### AIR 26°C / WATER 26°C / HUMID. 80%

| | | | | |
|---|---|---|---|---|
| Operating Power (max-min) (kW) | 5 | 7,5 | 11 | 14 |
| Consumed Power (max-min) (kW) | 1 | 1,4 | 2,2 | 2,6 |
| COP | 5 | 5,4 | 5 | 5,4 |

### AIR 15°C / WATER 26°C / HUMID. 70%

| | | | | |
|---|---|---|---|---|
| Operating Power (max-min) (kW) | 3,5 | 5,5 | 7,5 | 9,5 |
| Consumed Power (max-min) (kW) | 0,9 | 1,3 | 1,8 | 2,3 |
| COP | 4 | 4,4 | 4,3 | 4,2 |

## DIMENSIONS AND WEIGHTS

| | | | | |
|---|---|---|---|---|
| Product Dimensions (Length x Height x Depth) (mm) | 780 x 524 x 330mm | 978 x 572 x 386mm | 978 x 572 x 386mm | 1095 x 699 x 410mm |
| Product Weight (kg) | 36kg | 46kg | 65kg | 77kg |

*Cable not provided. Recommended section for maximum length of 20m.
**According to EN60704-1:2010+A11:2012 standard

AQUA SPHERE

HEAT PUMPS

# VSN (V2)

Available until end of stock

2 YEAR WARRANTY

FULL INVERTER

-5°C MIN. TEMP. AIR

HEATING & COOLING

ENERGY EFFICIENT

## DESCRIPTION

- Horizontal Blowing
- Full inverter Technology with 3 operating modes :
- Boost: Maximum power for quick heating at the beginning of the season
- Smart: Automatic power adjustment between Ecosilence and Boost
- Ecosilence: Greater energy savings and lower noise level
- Galvanized steel body with ABS top
- Heating priority mode (filtration pump control)
- Timed mode
- Automatic defrosting
- Titanium water exchanger, compatible with salt water treatment
- LCD Display

## ACCESSORIES INCLUDED

- Winter cover
- Condensate drain kit
- 2 x PVC 1/2 union Ø 50
- 4 x Anti-vibration feet
- Remote control kit (10m cable)

## TECHNICAL FEATURES

| Name | VSN-07 | VSN-09 | VSN-13 | VSN-15 | VSN-20 |
|---|---|---|---|---|---|
| Sku Reference | 75336 | 75337 | 75338 | 75339 | 75340 |
| EN 17645 Rating | A | A | A | A | A |
| EN 17645 SCOP | 7,5 | 8 | 9,6 | 7,7 | 8,5 |
| Recommended water flow (m³/h) | 3 | 4 | 5 | 6 | 7 |
| Electric Power Supply | 220-240 V / 1 / 50-60 Hz | | | | |
| Nominal operating power (A) | 4,7 | 6 | 8,4 | 10,7 | 14 |
| Maximum operating power (A) | 8 | 9 | 13 | 16 | 17 |
| Recommended Power cable size (mm²)* | 3 x 2,5 | 3 x 2,5 | 3 x 2,5 | 3 x 4 | 3 x 4 |
| Refrigerant fluid | R32 | R32 | R32 | R32 | R32 |
| Refrigerant fluid quantity (kg) | 0,3 | 0,45 | 0,6 | 0,7 | 1 |
| Acoustic Power (max-min) (dBA)** | 59 - 47 | 64 - 51 | 64 - 51 | 68 - 55 | 70 - 57 |
| Acoustic pressure at 10m (max-min) (dBA)** | 28 - 16 | 33 - 20 | 33 - 20 | 36 - 24 | 39 - 26 |

## HEATING PERFORMANCE

### AIR 26°C / WATER 26°C / HUMID. 80%

| | | | | | |
|---|---|---|---|---|---|
| Operating Power (max-min) (kW) | 7 - 2 | 9,5 - 2,3 | 13 - 2,4 | 15 - 2,5 | 20 - 2,8 |
| Consumed Power (max-min) (kW) | 1,1 - 0,1 | 1,4 - 0,2 | 2 - 0,1 | 2,5 - 0,1 | 3,3 - 0,2 |
| COP | 6,5 - 13,4 | 6,7 - 13,5 | 6,5 - 16,4 | 6 - 16,3 | 6,2 - 16,5 |

### AIR 15°C / WATER 26°C / HUMID. 70%

| | | | | | |
|---|---|---|---|---|---|
| Operating Power (max-min) (kW) | 5,5 - 1,4 | 7 - 1,5 | 9 - 1,7 | 11 - 1,9 | 15 - 2,2 |
| Consumed Power (max-min) (kW) | 1,1 - 0,2 | 1,3 - 0,2 | 1,9 - 0,2 | 2,3 - 0,2 | 3 - 0,3 |
| COP | 5,2 - 6,4 | 5,3 - 6,6 | 4,8 - 7,8 | 4,8 - 7,7 | 5 - 7,3 |

## DIMENSIONS AND WEIGHTS

| | | | | | |
|---|---|---|---|---|---|
| Product Dimensions (Length x Height x Depth) (mm) | 831 x 654 x 393mm | 831 x 654 x 393mm | 831 x 654 x 393mm | 914 x 654 x 393mm | 1111 x 754 x 413mm |
| Product Weight (kg) | 38,5kg | 41,5kg | 46kg | 52,5kg | 66kg |

*Cable not provided. Recommended section for maximum length of 20m.
**According to EN60704-1:2010+A11:2012 standard

AQUA SPHERE

# FSN (V2)

Available until end of stock

2 YEAR WARRANTY

ON/OFF +

HEATING & COOLING

## DESCRIPTION

- Horizontal Blowing
- Galvanized steel body with ABS top
- Possible heating function outside of filtration hours
- Timer to schedule the heat pump
- Automatic defrosting
- Titanium water exchanger, compatible with salt water treatment
- On-off compressor, Rotary vane
- LCD Display

## ACCESSORIES INCLUDED

- Winter cover
- Condensate drain kit
- 2 x PVC 1/2 union Ø 50
- 4 x Anti-vibration feet
- Remote control kit (10m cable)

## TECHNICAL FEATURES

| Name | FSN-08 | FSN-10 | FSN-12 | FSN-15 |
|---|---|---|---|---|
| Sku Reference | 75311 | 75312 | 75313 | 75335 |
| EN 17645 Rating | C | C | C | C |
| EN 17645 SCOP | 4,6 | 4,6 | 4,8 | 4,8 |
| Recommended water flow (m³/h) | 2 - 3 | 3 - 4 | 4 - 6 | 5 - 7 |
| Electric Power Supply | 220-240 V / 1 / 50 Hz | | | |
| Maximum operating power (A) | 8 | 10 | 12 | 14 |
| Recommended Power cable size (mm²)* | 3 x 2,5 | 3 x 2,5 | 3 x 2,5 | 3 x 4 |
| Refrigerant fluid | R32 | R32 | R32 | R32 |
| Refrigerant fluid quantity (kg) | 0,5 | 0,7 | 0,8 | 0,95 |
| Acoustic Power (max-min) (dBA)** | 62 | 63 | 67 | 68 |
| Acoustic pressure at 10m (max-min) (dBA)** | 31 | 32 | 36 | 37 |

## HEATING PERFORMANCE

### AIR 26°C / WATER 26°C / HUMID. 80%

| | | | | |
|---|---|---|---|---|
| Operating Power (max-min) (kW) | 8 | 10 | 12 | 15 |
| Consumed Power (max-min) (kW) | 1,5 | 1,8 | 2,2 | 2,7 |
| COP | 5,3 | 5,5 | 5,5 | 5,6 |

### AIR 15°C / WATER 26°C / HUMID. 70%

| | | | | |
|---|---|---|---|---|
| Operating Power (max-min) (kW) | 6 | 7 | 9 | 11 |
| Consumed Power (max-min) (kW) | 1,4 | 1,4 | 1,9 | 2,3 |
| COP | 4,4 | 4,8 | 4,7 | 4,8 |

## DIMENSIONS AND WEIGHTS

| | | | | |
|---|---|---|---|---|
| Product Dimensions (Length x Height x Depth) (mm) | 831 x 654 x 393mm | 831 x 654 x 393mm | 914 x 654 x 393mm | 914 x 654 x 393mm |
| Product Weight (kg) | 48,5kg | 51kg | 62,5kg | 66kg |

*Cable not provided. Recommended section for maximum length of 20m.
**According to EN60704-1:2010+A11:2012 standard

# DEHUMIDIFICATION

ZODIAC®


526 Introduction
530 DT 850 E
531 SIROCCO²
534 DF2 Ducted
537 DF2 Ducted with titanium condenser
540 DF2 Through-the-wall
542 DF2 Through-the-wall with titanium condenser
544 CAE
548 OMEGA
552 ENERGY Fan
553 CANAL FAST ECM Fan
554 Floor slot diffusers
556 Ventilation accessories


ASTRALPOOL®


559 BDP Confort

# DEHUMIDIFICATION

## > THE RIGHT DEHUMIDIFIER FOR EVERY POOL

A room or veranda sheltering a pool is a place where **the relative humidity in the air is high.** Water vapour trapped inside condenses on the cold walls, forming water droplets and condensation, while the air is progressively saturated with humidity. There are many consequences of these phenomena: **appearance of mould, peeling, rusting, etc.** To ensure the comfort of bathers and long life of an indoor pool, **it is essential to install a dehumidifier.**

### > SWIMMING POOLS IN CONSERVATORIES

Given the large area of glazed surfaces in a conservatory, it is strongly recommended to install a dehumidifier system with a system of ducts fitted around the room.

### > COVERED POOLS

- **For use from March to November:** a simple dehumidifier, free-standing or fitted, combined with a cover can ensure a comfortable atmosphere.
  The ambient air can be heated as necessary, but it is generally the sun's rays that increase the air temperature.
- **For use throughout the year:** only a gas or oil boiler, accompanied by a dehumidifier unit with a hot water coil installed in a room close to the shelter, can keep bathers comfortable throughout the year.

### > SPAS

In a room housing a private pool, there is very often a spa, either integrated or independent of the pool. In this case, the quantity of water evaporated by the spa must be added to that evaporated by the pool and fit the appropriate equipment .

### > PROFESSIONAL SWIMMING POOLS

The greater use and higher water temperature of this type of pool causes a much greater level of evaporation. Calculating evaporation here requires complete understanding of the parameters and equipment to conduct a thermal audit.

**Important:** it is essential to ensure replacement of fresh air at a minimum of 22 $m^3$/hr per person.

### 3 CRITERIA TO BE MET FOR OPTIMUM COMFORT:

1. **Water temperature:** from 26°C to 30°C, or higher for medical or professional uses.
2. **Air temperature:** from 26°C to 30°C, often set to the same value as the water temperature.
3. **Relative humidity:** between 60% and 70%. Below 60%, it feels too cool when getting out of the water.
   Above 70%, it feels too muggy and condensation forms in the room.

# > 3 TYPES OF DEHUMIDIFYING SYSTEMS

Zodiac® offers a wide range of solutions, split into three categories: **free-discharge, through-the-wall and ducted units.**
All these systems operate on the principle of the heat pump: drawing in warm, moist air and blowing out warmer, dry air.

Free-discharge systems

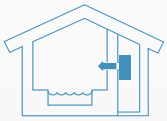

Through-the-wall systems

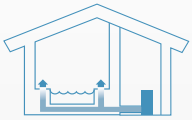

Ducted systems

## > FREE-DISCHARGE UNITS

These monoblock DT or Sirocco² systems are **designed for small volumes and require no ducting.** The units can be placed **in the room housing the pool**, more than 2 metres from the pool.

This free-discharge solution is the **simplest and most economical** for maintaining the relative humidity at a comfortable 65% level in the room. However, it is not effective in dealing with condensation on the windows.

DT 850 E

SIROCCO² FREE-DISCHARGE

Through-the-wall DF2

## > THROUGH-THE-WALL

These Sirocco² or DF2 monoblock systems are installed **in an adjacent plant room through the walls.** Only an inlet grille and an outlet grille are visible in the pool room.

This simple solution allows the **dehumidifier to be installed outside the pool hall (plant room adjacent to the pool)** but does not deal effectively with condensation on the windows.

## > DUCTED MODELS

A ducted system (DF2 or unit) is the only solution for **dealing effectively with condensation on the windows,** because it is possible to fit outlet grilles along the glazed walls.

Only these grilles are visible in the pool room while the equipment itself can be installed **in the nearby plant room.**

Ducted DF2

Ducted CAE

Ducted OMEGA

We offer an entire series of complementary accessories to enable you to build your complete installation:

- ventilation accessories
- inlet and outlet grilles
- ducts and diffusers

# DEHUMIDIFIERS

## A silent installation

### > EXPRESSING THE NOISE LEVEL WITH PRECISION

Sound level is expressed:

- Either **as acoustic power dB(A):** this is the unmodified noise level of the emitting source.
- Or as acoustic pressure dB(A): this is the sound level perceived by the human ear.

It depends on the installation environment and distance at which the measurement is made.
It must therefore always include a measuring distance.

The further you are from the emitting source, the more the sound level falls: it is reduced by 6 dB(A) for every doubling of the distance.

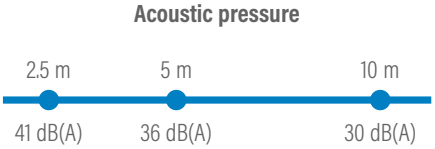


**To compare the noise level of several machines, check what type of value you have, power or pressure, and if it is pressure then at what distance was it measured!**

NOISE SCALE

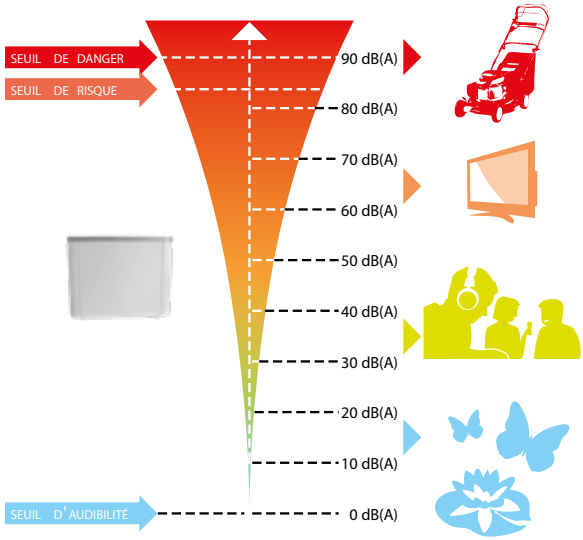


### > REDUCE NOISE TRANSMISSION THROUGH THE DUCTS

Special attention will be given to the aeraulic networks:

- **Size the ducts appropriately for the air flow**, limit turbulent sections, provide straight lines between each turbulent section.
- **Reduce the transmission of vibrations through the ducts:**
  - Install sleeves where they pass through walls,
  - Use anti-vibration collars to support ducts,
  - Use flexible couplings between the equipment and the duct network.
- **Size the inlet and outlet grilles** appropriately for the air flow rates passing through them. Provide expansion chambers between the grille and the duct.
- **Fit a sound trap**, if necessary, in the outlet ducts, particularly to avoid the noise propagating.

**Example of duct installation**

**Support frame**

### > RECOMMENDATIONS FOR INSTALLING A DEHUMIDIFIER

A dehumidifier system includes 'moving' parts (compressor, fan, etc.), vibrations from which can spread and build up.
A ducted unit installed in a plant room will provide the best possible noise solution.

**However, to avoid or reduce disturbances, a few installation rules should be observed:**

- **Install the dehumidifier on suitable anti-vibration blocks.** Renew them if necessary, because they lose effectiveness over time.
- **Install the system** either on a mounting base independent from the building and weighing twice as much as the dehumidifier, or on a very rigid support frame.

**Anti-vibration blocks**

# HYGRO CONTROL

## Simple dehumidification

Hygro Control is a hygro-thermostat designed exclusively by Zodiac® **for easy and intuitive control of the dehumidification equipment (CAE and OMEGA).**

HYGRO CONTROL

**REFERENCE POINT**
Find Zodiac® dehumidification products equipped with the Hygro Control function by locating this pictogram in the catalogue.

## > HOW DOES IT WORK?

Hygro Control is an accurate and easy to use digital control unit for **setting the desired relative humidity.** Relative humidity characterises the moisture in the air, specifically the quantity of water present as gas in the air in the room or conservatory housing the pool.

If the dehumidifier is fitted with the 'heating' option, Hygro Control can also set the room air temperature.

The unit is supplied with CAE and OMEGA dehumidifiers. Mounted on the wall, it is connected to the dehumidifier.

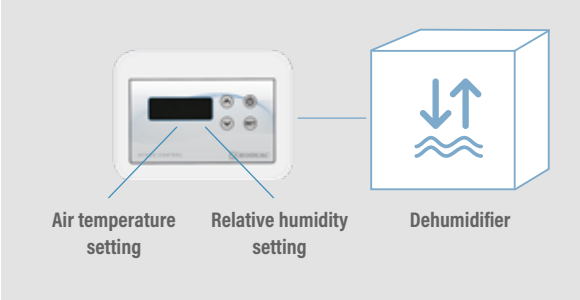


### STANDARD INSTALLATION

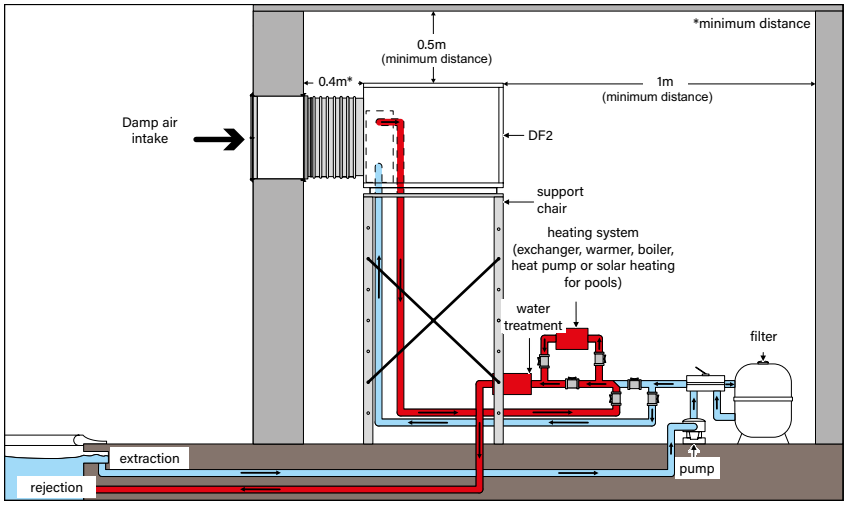


Example of an installation with DF2

- Hygro Control should be installed at least 50cm from the outlet for CAE and OMEGA
- Do not put it above an outlet grille (CAE, DF2 and OMEGA)
- It should be at least 1.5m from the floor

Equipping a pool with a good roof and a suitable ventilation system for the room increases the efficiency of the dehumidification system.

DEHUMIDIFICATION

# DT 850 E

+ Ideal for small pools
+ All-in-one, free-standing design: easy to install
+ Regulation with digital display

2 YEAR WARRANTY

EASY INTALLATION

ALL TYPES OF SPAS

## DESCRIPTION

- Indoor, single block dehumidifier, to be installed in the area to be treated
- ABS body
- Sealed type thermodynamic circuit
- Very silent centrifugal turbine
- Hermetic compressor with built-in protection
- Thermostatic defrosting using forced ventilation
- Electronic regulation using a built-in hygrometer
- Thermoformed anti-rust casing
- Washable air filter
- 2 ventilation speeds

## PRODUCT REFERENCES

| | |
|---|---|
| Name | **DT 850 E** |
| Standard Model | W28DT850R290 |

## TECHNICAL FEATURES

| | |
|---|---|
| Capacity (l/h)* | 2,2 |
| Absorbed power (W) | 970 |
| Air flow ($m^3$/h) | 500 |
| Electric power supply | 220-240V / 1 N~ / 50Hz |
| Nominal operating power (A) | 4,3 |
| Refrigerant fluid | R290 |
| Refrigerant fluid quantity (kg) | 0,3 |

*in the following nominal conditions: air 30°C, humidity 70%.
It is recommended to change the filters every year to allow the maximum preformance of the dehumidifier.

## WEIGHT AND DIMENSIONS

| | |
|---|---|
| Weight (kg) | 37 |

## OPTIONAL ACCESSORIES

Filter DT 850 / DT 850 E - W28FIDT5

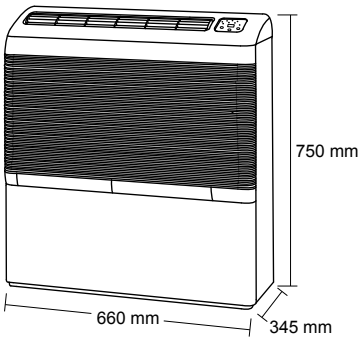

# SIROCCO²

## Comfort and intelligence

### > OPTIMAL COMFORT

Thanks to its **silence mode** and **vertical air outlet**, the Sirocco² is a discreet dehumidification unit, helping you forget it's here.

### > BUILT-IN INTELLIGENCE

With its humidity sensor's self-diagnostic feature, the Sirocco² **ensures the right relative humidity level** in all circumstances to preserve the facility's sustainability. Furthermore, when the pool is inoccupied (closed cover), **it reduces its energy consumption** by lowering the air heating temperature.

### > HARMONIOUS DESIGN

With its sleek lines and no visible grid, the Sirocco² **fits elegantly and discreetly** into all indoor pool environments.

**HUMIDITY SENSOR**

Located in the air flow, with easy access through the side panel.

**« TEST » MODE**

To check, whether at first installation or during diagnostics, the right configuration of the dehumidifier and its options.

**SELF-DIAGNOSTIC**

Automatic detection of the humidity measures inconsistencies. Dehumidifying fuction is always ensured by default.

## 2 possible configurations, on-site

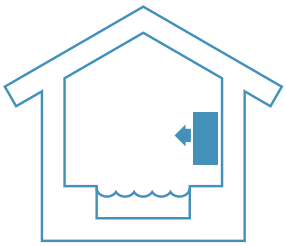

**FREE-DISCHARGE :**
wall-mounted or floor-standing

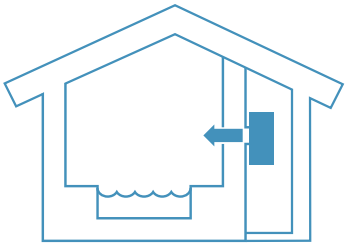

**THROUGH-THE-WALL**

DEHUMIDIFICATION

# SIROCCO²

**+ Optimal comfort**
**+ Built-in intelligence**
**+ Harmonious design**

## EQUIPEMENTS

- Vertical blowing
- Free-discharge or Through-the wall mounting (with accessories)
- Galvanized, epoxy painted body
- Built-in hygro-sensor
- Embedded LCD (LED) display (remote control as an option)
- 2-speed centrifugal fan with Silence mode
- Energy-saving mode (with pool cover contact)
- Air heating options electric resitance or hot water coil, on-site integrable, into the main body of the dehumidifier (no additional space required).

2 YEAR WARRANTY

MADE IN SPAIN

EASY INTALLATION

ALL TYPES OF SPAS

## ACCESSORIES INCLUDED IN THE PACK

- Wall fixing profile
- Air inlet filter

## PRODUCT REFERENCES

| Name | SIROCCO² 2M | SIROCCO² 3M | SIROCCO² 5M | SIROCCO² 5T |
|---|---|---|---|---|
| Standard model | WD002088 | WD002089 | WD002090 | WD002091 |

## TECHNICAL FEATURES

| | | | | |
|---|---|---|---|---|
| Capacity (l/h)* | 2,5 | 3,8 | 5,5 | 5,7 |
| Absorbed power*** (W) | 1210 | 2120 | 2580 | 2810 |
| Air flow ($m^3$/h) | 600 | 800 | 1000 | |
| Electric power supply | 220-240V / 1 N~ / 50Hz | | | 380-400V / 3N~ / 50Hz |
| Nominal absorbed intensity (A)*** | 5,3 | 9,5 | 11,8 | 4,8 |
| Max. absorbed intensity (A)*** | 6,9 | 12,5 | 16,7 | 5,7 |
| Refrigerant fluid | R410A | | | |
| Refrigerant fluid quantity (kg) | 0,93 | 1,15 | 1,65 | |
| Evacuation of condensate | Flexible tube Ø12/18 | | | |
| Accoustic Power, (dB(A) in Standard / Silence mode)** | 61,5 / 58,5 | 65 / 62 | 63,5 / 60 | 64,5 / 61 |
| Acoustic pressure at 1m (dB(A) in Standard / Silence mode)** | 47 / 44 | 51 / 48 | 49 / 45 | 50 / 46 |

* Standard unit, in the following nominal conditions: air 30°C, humidity 70%, Standard mode
** According to EN60704-1:2010+A11:2012 standard. Values measured and certified by the CCTM (Centre de Transfert de Technologie du Mans) on standard units (without options)
*** Excluding the power consumption of electric heating options.

## OPTIONAL ACCESSORIES

| Through-the-wall kit Sirocco² | Electric resistance Sirocco² | Hot water coil Sirocco² | Stander, Sirocco² Light Grey | Stander, Sirocco² Dark Grey | Remote control, Sirocco² | Retrocompatible through the wall kit between Sirocco 80M and Sirocco² 3M |
|---|---|---|---|---|---|---|
| 2M/3M: R0829500<br>5M/5T: R0829600 | 2M: R0829800<br>3M: R0829900<br>5M: R0830000<br>5T: R0894100 | 2M: R0830100<br>3M: R0830200<br>5M/5T: R0830300 | 2M/3M: R0893700<br>5M/5T: R0893800 | 2M/3M:R0893900<br>5M/5T: R0893800 | R0829700 | R0958900 |

## ELECTRIC RESISTANCE SPECIFICATIONS

| Name | SIROCCO² 2M | SIROCCO² 3M | SIROCCO² 5M | SIROCCO² 5T |
|---|---|---|---|---|
| Electric resistance power (kW) | 2 | 3 | 4,5 | |
| Electric resistance Max. absorbed intensity (A) | 8,7 | 13,1 | 19,6 | |

## HOT WATER COIL SPECIFICATIONS

| | | | | |
|---|---|---|---|---|
| Power (kW) with primary at 50-40 °C / 90-70 °C | 2,2 / 7,1 | 3,2 / 8,1 | 3,7 / 11,1 | |
| Water flow ($m^3$/h) with primary at 50-40 °C / 90-70 °C | 0,18 / 0,3 | 0,27 / 0,35 | 0,31 / 0,47 | |
| Load loss (mCE) with primary 90/70°C | 1,6 / 2,8 | 2,3 / 3,9 | 1,7 / 3,5 | |
| Connection (mm) | 15 / 21 male thread | | | |

## INSTALLATION

- Operating conditions (ambiant air temperature range) : +10°C to +40°C for the dehumidication function; +5°C to +40°C for the air heating function alone
- Air heating options can be added within the unit: electric resistance or hot water coil
- When the wall cannot withstand the load of the unit, it is mandatory to mount the optional stander as an additional support.
- The unit shall always be attached to the wall in order to prevent any tilt, even when equipped with a stander.
- For more information, read the installation and user guide

Installation of an appliance with the hot water coil or electric heating option.

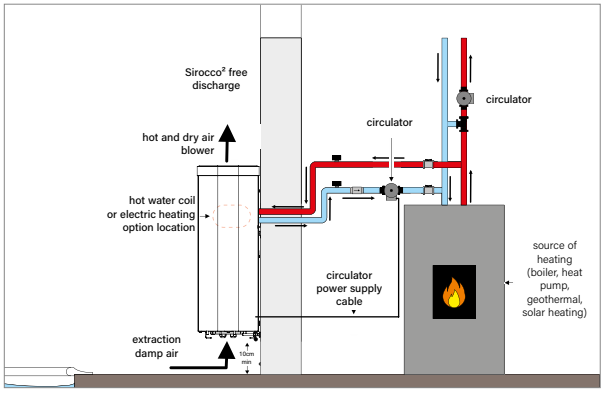


FREE DISCHARGE

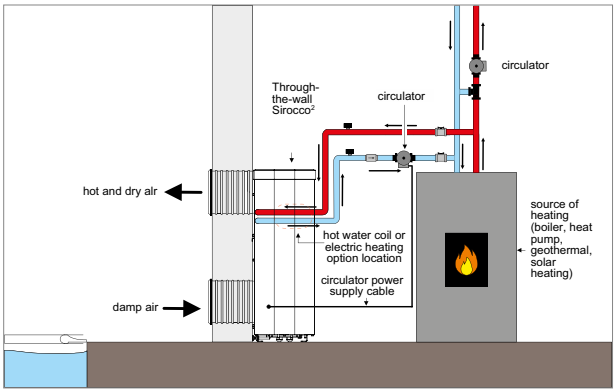


THROUGH-THE-WALL

## WEIGHT AND DIMENSIONS

| Name | SIROCCO² 2M | SIROCCO² 3M | SIROCCO² 5M | SIROCCO² 5T |
|---|---|---|---|---|
| A | 1060 | | 1410 | |
| B | 630 | | 1010 | |
| C : Anchor points | 700 | | 1000 | |
| Space: Tolerance +2/-0 mm | 580 x 145 | | 998 x 165 | |
| Number of grates | 2 x 3 | | 2 x 5 | |
| Weight (kg) (basic model) | 70 | 80 | 95 | |

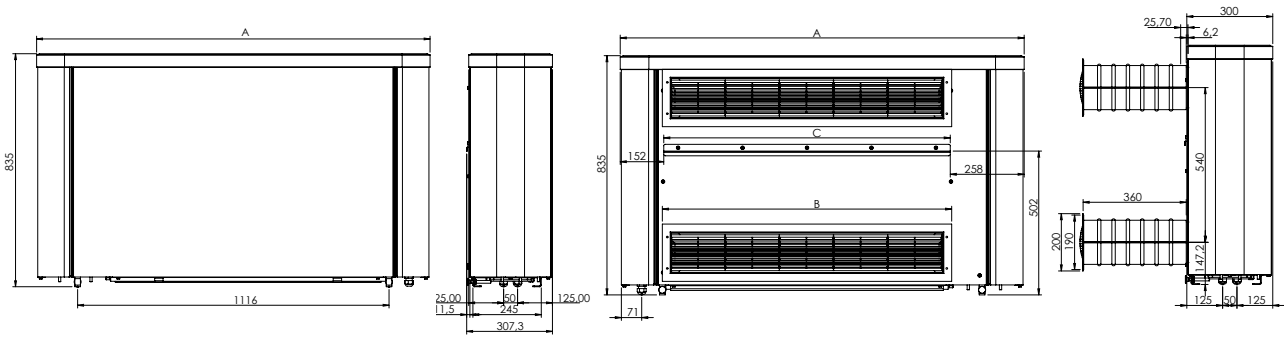

DEHUMIDIFICATION

# DF2 Ducted

+ Horizontal ducted installation
+ Available in 5 capacities
+ Air heating options (electric heating or hot water coil)

2 YEAR WARRANTY

MADE IN SPAIN

EASY INTALLATION

## EQUIPEMENTS

- Thermohygrometer
- User friendly LCD (LED) Display provided with 10 meter cable
- IE4 inverter fan with automatic speed adjustement
- Pool cover status detection
- Clogged filter detection
- ECO Mode: reduce the speed fan for energy savings
- Time band setting
- Remote on/off
- Alarm status

USer Friendly display

## PRODUCT REFERENCES

| DF2 Ducted | DF2-03MD | DF2-05MD | DF2-05TD | DF2-08MD | DF2-08TD | DF2-10MD | DF2-10TD | DF2-12TD |
|---|---|---|---|---|---|---|---|---|
| Description | DF2 03 Mono Ducted | DF2 05 Mono Ducted | DF2 05 Three Phase Ducted | DF2 08 Mono Ducted | DF2 08 Three Phase Ducted | DF2 10 Mono Ducted | DF2 10 Three Phase Ducted | DF2 12 Three Phase Ducted |
| Standard Model | WD002254 | WD002256 | WD002258 | WD002260 | WD002262 | WD002264 | WD002266 | WD002268 |

## TECHNICAL FEATURES

| DF2 Ducted | DF2-03MD | DF2-05MD | DF2-05TD | DF2-08MD | DF2-08TD | DF2-10MD | DF2-10TD | DF2-12TD |
|---|---|---|---|---|---|---|---|---|
| Capacity (l/h)* | 3,5 | 5,6 | 5,6 | 8,7 | 8,7 | 10,7 | 10,7 | 12,1 |
| Absorbed power (W)** | 1755 | 2580 | 2510 | 3560 | 3514 | 4620 | 4609 | 4999 |
| Air flow ($m^3$/H) | 1300 | 1300 | 1300 | 1700 | 1700 | 2000 | 2000 | 2000 |
| Available pressure (mCE) | 200 | 200 | 200 | 200 | 200 | 200 | 200 | 200 |
| Electric power supply | 220-240V / 1 N~ / 50Hz | 220-240V / 1 N~ / 50Hz | 380-400V / 3N~ / 50Hz | 220-240V / 1N~ / 50Hz | 380-400V / 3N~ / 50Hz | 220-240V / 1N~ 50HZ | 380-400V 3N~ / 50Hz | 380-400V 3N~ / 50Hz |
| Nominal absorbed intensity (A)** | 7,9 | 11,9 | 4,3 | 16,6 | 6,03 | 21,5 | 8,5 | 9 |
| Max. absorbed intensity (A)** | 15 | 19,2 | 7,9 | 29,1 | 14,5 | 34,2 | 15,5 | 17,5 |
| Refrigerant fluid | R410A | R410A | R410A | R410A | R410A | R410A | R410A | R410A |
| Refrigerant fluid quantity (kg) | 1,4 | 1,5 | 1,5 | 1,75 | 1,75 | 2,56 | 2,56 | 2,62 |
| Evacuation of condensate | R-3/4"PVC-25 | | | | | | | |
| Acoustic power (dB(A)) | 71,5 | 71,5 | 71,5 | 73,6 | 73,6 | 76,7 | 76,7 | 76,7 |

*standard unit, in the following nominal conditions : air 30°C, humidity 70%, Standard mode
** Excluding the power consumption of electric heating options"

## ELECTRICAL RESISTANCE OPTION

| DF2 Ducted | DF2-03MD | DF2-05MD | DF2-05TD | DF2-08MD | DF2-08TD | DF2-10MD | DF2-10TD | DF2-12TD |
|---|---|---|---|---|---|---|---|---|
| Electrical resistance 4,5kW* | R1023100 | R1023100 | R1023200 | R1023100 | R1023200 | R1023400 | R1023500 | R1023500 |
| Electrical resistance 9,0kW* | na | na | na | na | R1023300 | na | R1023600 | R1023600 |

* Electric resistance max absorbed intensity (A) is 19,56 A for 4,5kW and 12,99 A for 9kW

## HOT WATER COIL OPTION SPECIFICATIONS

| DF2 Ducted | DF2-03MD | DF2-05MD | DF2-05TD | DF2-08MD | DF2-08TD | DF2-10MD | DF2-10TD | DF2-12TD |
|---|---|---|---|---|---|---|---|---|
| Hot water coil references | R1023700 | R1023700 | R1023700 | R1023700 | R1023700 | R1023800 | R1023800 | R1023800 |
| Power (kW) with primary at 50 - 40° / 90 - 70° | 4,5 / 14,3 | 4,5 / 14,3 | 4,5 / 14,3 | 5,3 / 16,9 | 5,3 / 16,9 | 7,4 / 23,3 | 7,4 / 23,3 | 7,4 / 23,3 |
| Water flow ($m^3$/h) with primary at 90 / 70°C | 0,64 | 0,64 | 0,64 | 0,75 | 0,75 | 1,03 | 1,03 | 1,03 |
| Load loss (mCE) with primary at 90/70°C | 1,62 | 1,62 | 1,62 | 2,19 | 2,19 | 2,10 | 2,10 | 2,10 |
| Connection (mm) | 3/4" CU 22 | | | | | | | |

## OPTIONS

| Fresh air intake adaptor plate DF2 | DF2 chassis support |
|---|---|
| R1023900 | WT004000 |

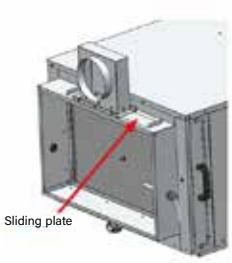


## INSTALLATION

- Installation in a technical room nearby the pool hall.
- Available pressure 200 Pa making it possible to install a duct network to carry hot, dry air the lengh of the window bays.
- Duct diameter: Ø 400 mini or 400 x 300.
- It is highly recommanded to integrate these options during first insatallation.

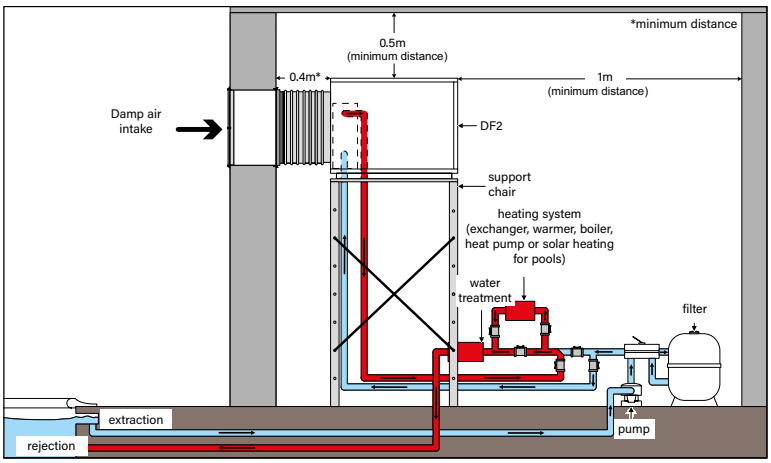

## OPTIONAL ACCESSORIES* - DF2 03-05-08

| 1 | 2 | 3 | 3 | 4 | 5 | 6 | 7 | 7 | 8 | INLET | OUTLET |
|---|---|---|---|---|---|---|---|---|---|---|---|
| Horizontal angle 90° 635x410mm | Vertical angle 90° 635x410mm | Adapta-tion part 635x410mm Ø315mm | Adapta-tion part 635x410mm Ø400mm | Rectangular sound trap 635x410 mm - L:500mm | Box 635x410mm Ø315mm (top) | Horizontal or vertical angle 90° 450x450mm | Adapta-tion part 450x450mm Ø315mm | Adapta-tion part 450x450mm Ø400mm | Adapta-tion part 635x410mm - 450x450mm L:200mm | Rectangu-lar frame 635x410 L:50mm | Rectangu-lar frame 450x450 L:50mm |
| TBC | TBC | TBC | TBC | TBC | TBC | TBC | TBC | TBC | TBC | TBC | TBC |

* Only for France and Belgium

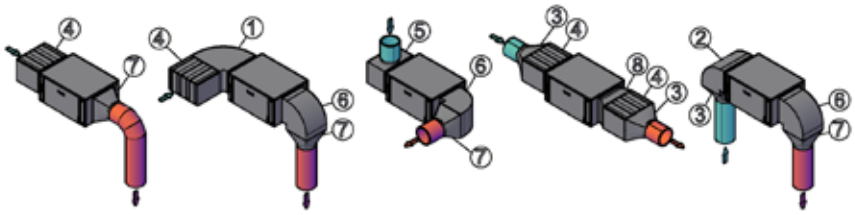

## OPTIONAL ACCESSORIES* - DF2 10-12

| 1 | 2 | 3 | 4 | 5 | 6 | 7 | 8 | 9 | INLET | OUTLET |
|---|---|---|---|---|---|---|---|---|---|---|
| Horizontal angle 90° 650x545mm | Vertical angle 90° 650x545mm | Adapta-tion part 650x545mm Ø400mm | Rectangular sound trap 650x545 mm - L:500mm | Box 650x545mm Ø400mm (top) | Horizontal angle 90° 600x500mm | Vertical angle 90° 600x500mm | Adapta-tion part 600x500mm Ø400mm | Rectangular sound trap 600x500mm - L:500mm | Rectangu-lar frame 650x545 L:50mm | Rectangu-lar frame 600x500 L:50mm |
| TBC | TBC | TBC | TBC | TBC | TBC | TBC | TBC | TBC | TBC | TBC |

* Only for France and Belgium

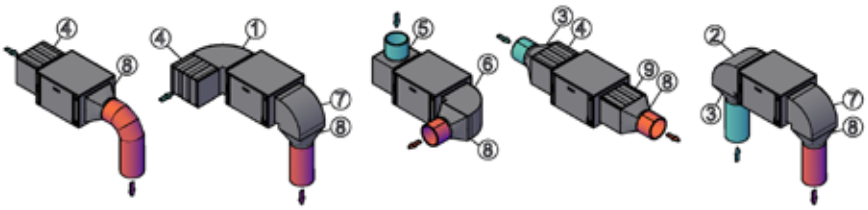

## WEIGHT AND DIMENSIONS

| DF2 Ducted | DF2-03MD | DF2-05MD | DF2-05TD | DF2-08MD | DF2-08TD | DF2-10MD | DF2-10TD | DF2-12TD |
|---|---|---|---|---|---|---|---|---|
| Weight (kg) | 113 | 114 | 114 | 117 | 117 | 147 | 147 | 149 |
| A | 1170 | | | | | | | |
| B | 759 | | | | | | 863 | |
| C | 560 | | | | | | 694 | |
| D | 633 | | | | | | 648 | |
| E | 408 | | | | | | 543 | |
| F | 448 | | | | | | 598 | |
| G | 448 | | | | | | 498 | |

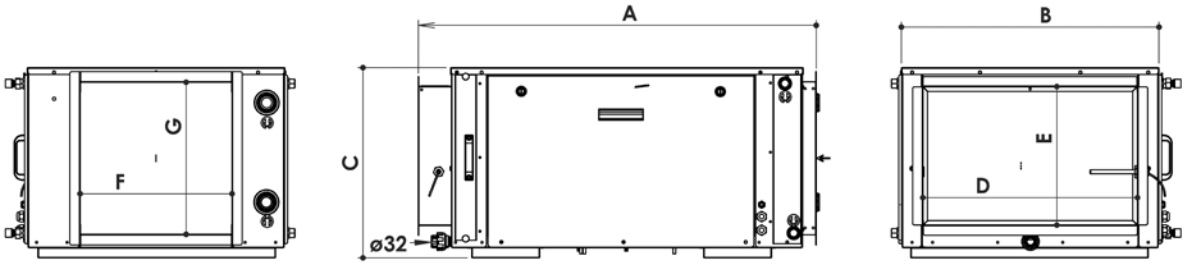

DEHUMIDIFICATION

# DF2 Ducted

WITH TITANIUM CONDENSER

**+ Horizontal ducted installation**
**+ Available in 5 capacities**
**+ Titanium condenser version & Air heating options (electric heating or hot water coil)**

2 YEAR WARRANTY

MADE IN SPAIN

EASY INTALLATION

## EQUIPEMENTS

- Titanium condenser version and filtration pump management
- Thermohygrometer
- User friendly LCD (LED) Display provided with 10 meter cable
- IE4 inverter fan with automatic speed adjustement
- Pool cover status detection
- Clogged filter detection
- ECO Mode: reduce the speed fan for energy savings
- Time band setting
- Remote on/off
- Alarm status

USer Friendly display

## PRODUCT REFERENCES

| DF2 Ducted with titanium condenser | DF2-03MDC | DF2-05MDC | DF2-05TDC | DF2-08MDC | DF2-08TDC | DF2-10MDC | DF2-10TDC | DF2-12TDC |
|---|---|---|---|---|---|---|---|---|
| Description | DF2 03 Mono Ducted with Titanium condenser | DF2 05 Mono Ducted with Titanium condenser | DF2 05 Three Phase Ducted with Titanium condenser | DF2 08 Mono Ducted with Titanium condenser | DF2 08 Three Phase Ducted with Titanium condenser | DF2 10 Mono Ducted with Titanium condenser | DF2 10 Three Phase Ducted with Titanium condenser | DF2 12 Three Phase Ducted with Titanium condenser |
| Standard Model | WD002255 | WD002257 | WD002259 | WD002261 | WD002263 | WD002265 | WD002267 | WD002269 |

## TECHNICAL FEATURES

| DF2 Ducted with titanium condenser | DF2-03MDC | DF2-05MDC | DF2-05TDC | DF2-08MDC | DF2-08TDC | DF2-10MDC | DF2-10TDC | DF2-12TDC |
|---|---|---|---|---|---|---|---|---|
| Capacity (l/h)* | 5 | 7 | 7 | 9,8 | 9,4 | 11,30 | 11,5 | 13 |
| Absorbed power (W)** | 1471 | 1973 | 1973 | 2742 | 2902 | 3506 | 3506 | 4187 |
| Air flow ($m^3$/h) | 1300 | 1300 | 1300 | 1700 | 1700 | 2000 | 2000 | 2000 |
| Available pressure (mCE) | 200 | 200 | 200 | 200 | 200 | 200 | 200 | 200 |
| Electric power supply | 220-240V / 1 N~ / 50Hz | 220-240V / 1 N~ / 50Hz | 380-400V / 3N~ / 50Hz | 220-240V / 1N~ / 50Hz | 380-400V / 3N~ / 50Hz | 220-240V / 1N~ 50HZ | 380-400V 3N~ / 50Hz | 380-400V 3N~ / 50Hz |
| Nominal absorbed intensity (A)** | 6,5 | 9,1 | 3,6 | 12,8 | 5,5 | 17,5 | 5,8 | 7,9 |
| Max. absorbed intensity (A)** | 15 | 19,2 | 7,9 | 29,1 | 14,5 | 34,2 | 15,5 | 17,5 |
| Refrigerant fluid | R410A | R410A | R410A | R410A | R410A | R410A | R410A | R410A |
| Refrigerant fluid quantity (kg) | 2,02 | 2,10 | 2,10 | 1,75 | 2,21 | 2,96 | 2,96 | 3,10 |
| Evacuation of condensate | R-3/4"-PVC-25 | R-3/4"-PVC-25 | R-3/4"-PVC-25 | R-3/4"-PVC-25 | R-3/4"-PVC-25 | R-3/4"-PVC-25 | R-3/4"-PVC-25 | R-3/4"-PVC-25 |
| Acoustic power (dB(A)) | 71,5 | 71,5 | 71,5 | 73,6 | 73,6 | 76,7 | 76,7 | 76,7 |

*standard unit, in the following nominal conditions : air 30°C, humidity 70%, Standard mode
** Excluding the power consumption of electric heating options"

## ELECTRICAL RESISTANCE OPTION

| DF2 Ducted with titanium condenser | DF2-03MDC | DF2-05MDC | DF2-05TDC | DF2-08MDC | DF2-08TDC | DF2-10MDC | DF2-10TDC | DF2-12TDC |
|---|---|---|---|---|---|---|---|---|
| Electrical resistance 4,5kW* | R1023100 | R1023100 | R1023200 | R1023100 | R1023200 | R1023400 | R1023500 | R1023500 |
| Electrical resistance 9,0kW* | na | na | na | na | R1023300 | na | R1023600 | R1023600 |

* Electric resistance max absorbed intensity (A) is 19,56 A for 4,5kW and 12,99 A for 9kW

## HOT WATER COIL OPTION SPECIFICATIONS

| DF2 Ducted with titanium condenser | DF2-03MDC | DF2-05MDC | DF2-05TDC | DF2-08MDC | DF2-08TDC | DF2-10MDC | DF2-10TDC | DF2-12TDC |
|---|---|---|---|---|---|---|---|---|
| Hot water coil references | R1023700 | R1023700 | R1023700 | R1023700 | R1023700 | R1023800 | R1023800 | R1023800 |
| Power (kW) with primary at 50 - 40° / 90 - 70° | 4,5/14,3 | 4,5/14,3 | 4,5/14,3 | 5,3/16,9 | 5,30 / 16,86 | 7,4 / 23,3 | 7,4 / 23,3 | 7,4 / 23,3 |
| Water flow ($m^3$/h) with primary at 90 / 70°C | 0,64 | 0,64 | 0,64 | 0,75 | 0,75 | 1,03 | 1,03 | 1,03 |
| Load loss (mCE) with primary at 90/70°C | 1,62 | 1,62 | 1,62 | 2,19 | 2,19 | 2,10 | 2,10 | 2,10 |
| Connection (mm) | 3/4" CU 22 | | | | | | | |

## OPTIONS

| Fresh air intake adaptor plate DF2 | DF2 chassis support |
|---|---|
| R1023900 | WT004000 |

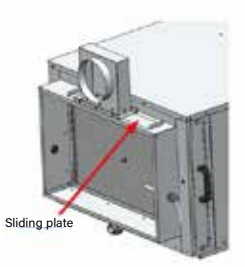


## INSTALLATION

- Installation in a technical room nearby the pool hall.
- Available pressure 200 Pa making it possible to install a duct network to carry hot, dry air the lengh of the window bays.
- Duct diameter: Ø 400 mini or 400 x 300.
- It is highly recommanded to integrate these options during first insatallation.
- Air heating options (electric resistance and hot water coil) increase the overall dimensions of the units. It is recommanded to plan their integration early in the design process. Find out more details in the installation guide.

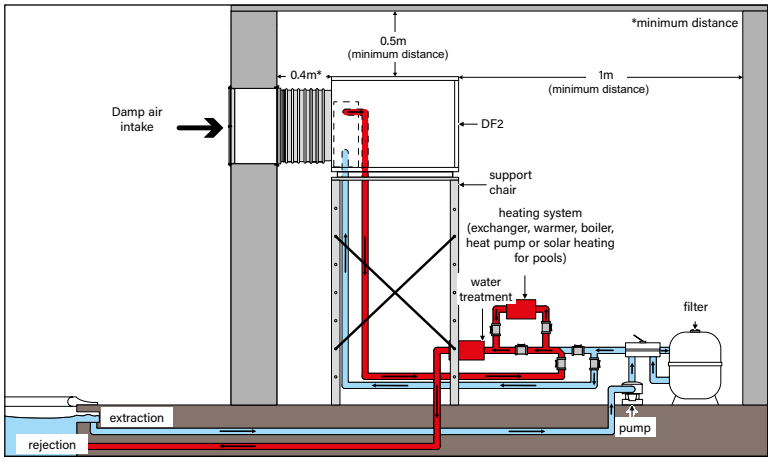

## OPTIONAL ACCESSORIES* - DF2 03-05-08

| 1 | 2 | 3 | 3 | 4 | 5 | 6 | 7 | 7 | 8 | INLET | OUTLET |
|---|---|---|---|---|---|---|---|---|---|---|---|
| Horizontal angle 90° 635x410mm | Vertical angle 90° 635x410mm | Adapta-tion part 635x410mm Ø315mm | Adapta-tion part 635x410mm Ø400mm | Rectangular sound trap 635x410 mm - L:500mm | Box 635x410mm Ø315mm (top) | Horizontal or vertical angle 90° 450x450mm | Adapta-tion part 450x450mm Ø315mm | Adapta-tion part 450x450mm Ø400mm | Adapta-tion part 635x410mm - 450x450mm L:200mm | Rectangu-lar frame 635x410 L:50mm | Rectangu-lar frame 450x450 L:50mm |
| TBC | TBC | TBC | TBC | TBC | TBC | TBC | TBC | TBC | TBC | TBC | TBC |

* Only for France and Belgium

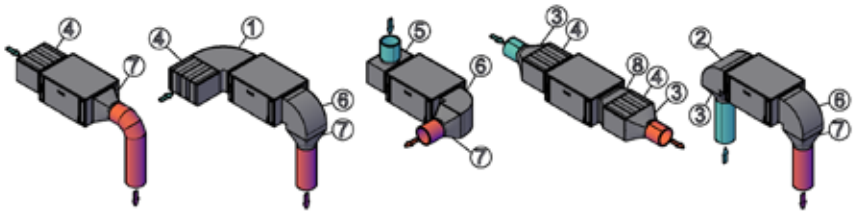

## OPTIONAL ACCESSORIES* - DF2 10-12

| 1 | 2 | 3 | 4 | 5 | 6 | 7 | 8 | 9 | INLET | OUTLET |
|---|---|---|---|---|---|---|---|---|---|---|
| Horizontal angle 90° 650x545mm | Vertical angle 90° 650x545mm | Adapta-tion part 650x545mm Ø400mm | Rectangular sound trap 650x545 mm - L:500mm | Box 650x545mm Ø400mm (top) | Horizontal angle 90° 600x500mm | Vertical angle 90° 600x500mm | Adapta-tion part 600x500mm Ø400mm | Rectangular sound trap 600x500mm - L:500mm | Rectangu-lar frame 650x545 L:50mm | Rectangu-lar frame 600x500 L:50mm |
| TBC | TBC | TBC | TBC | TBC | TBC | TBC | TBC | TBC | TBC | TBC |

* Only for France and Belgium

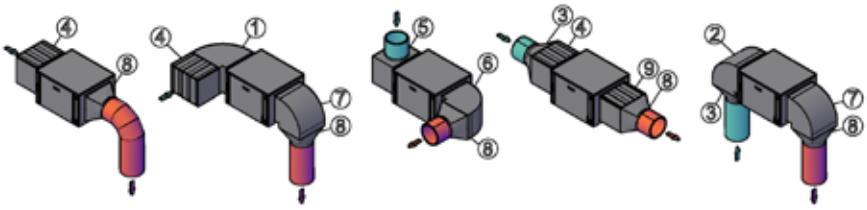

## WEIGHT AND DIMENSIONS

| DF2 Ducted with titanium condenser | DF2-03MD | DF2-05MD | DF2-05TD | DF2-08MD | DF2-08TD | DF2-10MD | DF2-10TD | DF2-12TD |
|---|---|---|---|---|---|---|---|---|
| Weight (kg) | 113 | 114 | 114 | 117 | 117 | 147 | 147 | 149 |
| A | 1170 | | | | | | | |
| B | 759 | | | | | | 863 | |
| C | 560 | | | | | | 694 | |
| D | 633 | | | | | | 648 | |
| E | 408 | | | | | | 543 | |
| F | 448 | | | | | | 598 | |
| G | 448 | | | | | | 498 | |

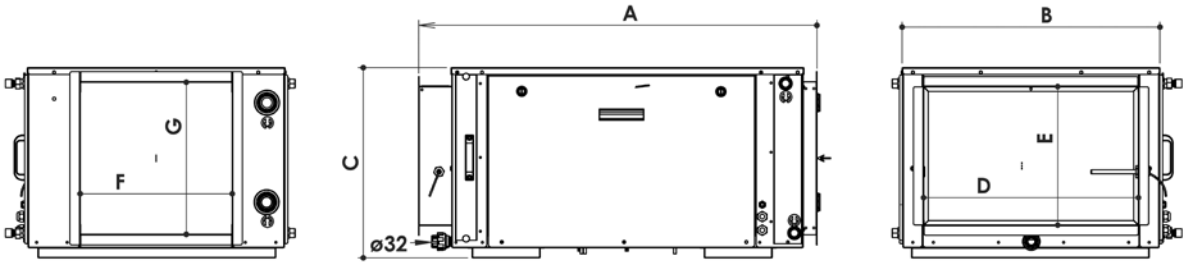

DEHUMIDIFICATION

# DF2 Through-the-wall

**+ Hidden installation without ducts, for simplified project design**
**+ Available in 5 capacities**
**+ Air heating options (electric heating or hot water coil)**

2 YEAR WARRANTY

MADE IN SPAIN

EASY INTALLATION

## EQUIPEMENTS

- Thermohygrometer
- User friendly LCD (LED) Display provided with 10 meter cable
- IE4 inverter fan with automatic speed adjustement
- Pool cover status detection
- Clogged filter detection
- ECO Mode: reduce the speed fan for energy savings
- Time band setting
- Remote on/off
- Alarm status

USer Friendly display

## PRODUCT REFERENCES

| DF2 Through-the-wall | DF2-03MT | DF2-05MT | DF2-05TT | DF2-08MT | DF2-08TT | DF2-10MT | DF2-10TT | DF2-12TT |
|---|---|---|---|---|---|---|---|---|
| Description | DF2 03 Monophase Through the Wall | DF2 03 Monophase Through the Wall | DF2 05 Three phase Through the Wall | DF2 08 Monophase Through the Wall | DF2 08 Three phase Through the Wall | DF2 10 Monophase Through the Wall | DF2 10 Three phase Through the Wall | DF2 12 Three phase Through the Wall |
| Standard Model | WD002270 | WD002272 | WD220074 | WD220076 | WD002278 | WD002282 | WD002284 | WD002286 |

## TECHNICAL FEATURES

| DF2 Through-the-wall | DF2-03MT | DF2-05MT | DF2-05TT | DF2-08MT | DF2-08TT | DF2-10MT | DF2-10TT | DF2-12TT |
|---|---|---|---|---|---|---|---|---|
| Capacity (l/h)* | 3,5 | 5,6 | 5,6 | 8,7 | 8,7 | 10,7 | 10,7 | 12,1 |
| Absorbed power (W)** | 1755 | 2580 | 2510 | 3560 | 3514 | 4620 | 4609 | 4999 |
| Air flow ($m^3$/h) | 1300 | 1300 | 1300 | 1700 | 1700 | 2000 | 2000 | 2000 |
| Electric power supply | 220-240V / 1 N~ / 50Hz | 220-240V / 1 N~ / 50Hz | 380-400V / 3N~ / 50Hz | 220-240V / 1N~ / 50Hz | 380-400V / 3N~ / 50Hz | 220-240V / 1N~ 50HZ | 380-400V 3N~ / 50Hz | 380-400V 3N~ / 50Hz |
| Nominal absorbed intensity (A)** | 7,8 | 11,9 | 4,3 | 16,6 | 6,0 | 21,5 | 8,5 | 9 |
| Max. absorbed intensity (A)** | 15 | 19,2 | 7,9 | 29,1 | 14,5 | 34,2 | 15,5 | 17,5 |
| Refrigerant fluid | R410A | R410A | R410A | R410A | R410A | R410A | R410A | R410A |
| Refrigerant fluid quantity (kg) | 1,40 | 1,50 | 1,50 | 1,75 | 1,75 | 2,56 | 2,56 | 2,62 |
| Evacuation of condensate | R-3/4"-PVC-25 | R-3/4"-PVC-25 | R-3/4"-PVC-25 | R-3/4"-PVC-25 | R-3/4"-PVC-25 | R-3/4"-PVC-25 | R-3/4"-PVC-25 | R-3/4"-PVC-25 |
| Acoustic power (dB(A)) | 71,50 | 71,50 | 71,50 | 73,60 | 73,60 | 76,7 | 76,7 | 76,7 |

*standard unit, in the following nominal conditions : air 30°C, humidity 70%, Standard mode
** Excluding the power consumption of electric heating options"

## ELECTRICAL RESISTANCE OPTION

| DF2 Through-the-wall | DF2-03MT | DF2-05MT | DF2-05TT | DF2-08MT | DF2-08TT | DF2-10MT | DF2-10TT | DF2-12TT |
|---|---|---|---|---|---|---|---|---|
| Electrical resistance 4,5kW* | R1024000 | R1024000 | R1024100 | R1024000 | R1024100 | R1024300 | R1024400 | R1024400 |
| Electrical resistance 9,0kW* | na | na | na | na | R1024200 | na | R1024500 | R1024500 |

* Electric resistance max absorbed intensity (A) is 19,56 A for 4,5kW and 12,99 A for 9kW

## HOT WATER COIL OPTION SPECIFICATIONS

| DF2 Through-the-wall | DF2-03MT | DF2-05MT | DF2-05TT | DF2-08MT | DF2-08TT | DF2-10MT | DF2-10TT | DF2-12TT |
|---|---|---|---|---|---|---|---|---|
| Hot water coil references | R1024600 | R1024600 | R1024600 | R1024600 | R1024600 | R1024700 | R1024700 | R1024700 |
| Power (kW) with primary at 50 - 40° / 90 - 70° | 4,7 / 14,9 | 4,7 / 14,9 | 4,7 / 14,9 | 5,6 / 17,8 | 5,6 / 17,8 | 7,1 / 22,2 | 7,1 / 22,2 | 7,1 / 22,2 |
| Water flow ($m^3$/h) with primary at 90 / 70°C | 0,66 | 0,66 | 0,66 | 0,79 | 0,79 | 0,99 | 0,99 | 0,99 |
| Load loss (mCE) with primary at 90/70°C | 1,69 | 1,69 | 1,69 | 2,36 | 2,36 | 1,86 | 1,86 | 1,86 |
| Connection (mm) | 3/4" CU 22 | | | | | | | |

## OPTION

| |
|---|
| DF2 chassis support |
| WT004000 |

## INSTALLATION

- Installation in a technical room nearby the pool hall.
- Blower and intake grates mounted on the part to be mortared included with the appliance.
- Possibility of double deflector grates to direct the hot dry air towards the windows.
- Hot water coil assembled inside the appliance (option).
- Extra electric heating using incorporated electric heating elements (option).
- Filter on the intake.

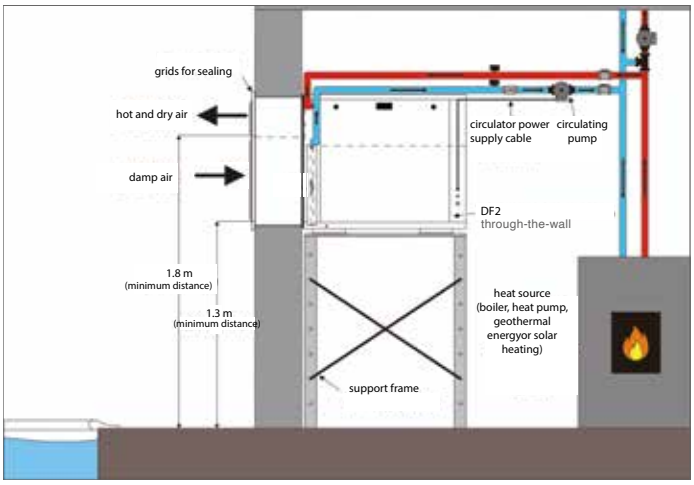


## WEIGHT AND DIMENSIONS

| DF2 Through-the-wall | DF2-03MT | DF2-05MT | DF2-05TT | DF2-08MT | DF2-08TT | DF2-10MT | DF2-10TT | DF2-12TT |
|---|---|---|---|---|---|---|---|---|
| Weight (kg) | 121 | 122 | 122 | 125 | 125 | 155 | 155 | 157 |
| A | 1036 | | | | | | | |
| B | 759 | | | | | 863 | | |
| C | 861 | | | | | 999 | | |
| D | 621 | | | | | 652 | | |
| E | 445 | | | | | 580 | | |
| F | 621 | | | | | 652 | | |
| G | 281 | | | | | 283 | | |

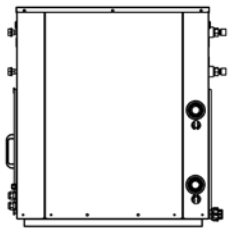

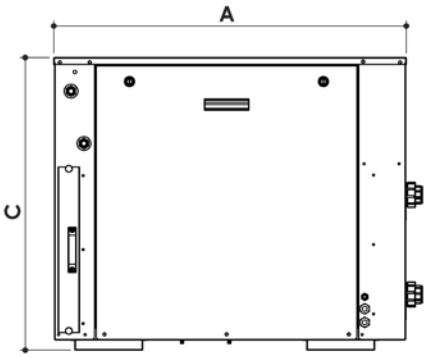


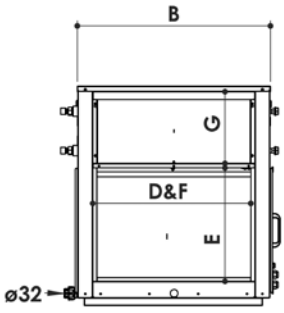

DEHUMIDIFICATION

# DF2 Through-the-wall

WITH TITANIUM CONDENSER

**+ Hidden installation without ducts, for simplified project design**
**+ Available in 5 capacities**
**+ Titanium condenser version & Air heating options (electric heating or hot water coil)**

2 YEAR WARRANTY

MADE IN SPAIN

EASY INTALLATION

## EQUIPEMENTS

- Titanium condenser version and filtration pump management
- Thermohygrometer
- User friendly LCD (LED) Display provided with 10 meter cable
- IE4 inverter fan with automatic speed adjustement
- Clogged filter detection
- ECO Mode: reduce the speed fan for energy savings
- Time band setting
- Remote on/off
- Alarm status

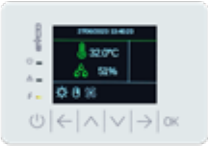

USer Friendly display

## PRODUCT REFERENCES

| DF2 Through-the-wall with titanium condenser | DF2-03MTC | DF2-05MTC | DF2-05TTC | DF2-08MTC | DF2-08TTC | DF2-10MTC | DF2-10TTC | DF2-12TTC |
|---|---|---|---|---|---|---|---|---|
| Description | DF2 03 Monphase Through the Wall with Titanium condenser | DF2 05 Monophase Through the Wall with Titanium condenser | DF2 05 Three phase Through the Wall with Titanium condenser | DF2 08 Monophase Through the Wall with Titanium condenser | DF2 08 Three phase Through the Wall with Titanium condenser | DF2 10 Monophase Through the Wall with Titanium condenser | DF2 10 Three phase Through the Wall with Titanium condenser | DF2 12 Three phase Through the Wall with Titanium condenser |
| Standard Model | WD002271 | WD002273 | WD220074 | WD002277 | WD002279 | WD002283 | WD002285 | WD002287 |

## TECHNICAL FEATURES

| DF2 Through-the-wall with titanium condenser | DF2-03MTC | DF2-05MTC | DF2-05TTC | DF2-08MTC | DF2-08TTC | DF2-10MTC | DF2-10TTC | DF2-12TTC |
|---|---|---|---|---|---|---|---|---|
| Capacity (l/h)* | 5 | 7 | 7 | 9,8 | 9,4 | 11,3 | 11,5 | 13 |
| Absorbed power (W)** | 1471 | 1973 | 1973 | 2742 | 2902 | 3506 | 3506 | 4187 |
| Air flow ($m^3$/h) | 1300 | 1300 | 1300 | 1700 | 1700 | 2000 | 2000 | 2000 |
| Electric power supply | 220-240V / 1 N~ / 50Hz | 220-240V / 1 N~ / 50Hz | 380-400V / 3N~ / 50Hz | 220-240V / 1N~ / 50Hz | 380-400V / 3N~ / 50Hz | 220-240V / 1N~ 50HZ | 380-400V 3N~ / 50Hz | 380-400V 3N~ / 50Hz |
| Nominal absorbed intensity (A)** | 6,5 | 9,1 | 3,6 | 12,8 | 5,5 | 17,5 | 5,8 | 7,9 |
| Max. absorbed intensity (A)** | 15 | 19,2 | 7,9 | 29,1 | 14,5 | 34,2 | 15,5 | 17,5 |
| Refrigerant fluid | R410A | R410A | R410A | R410A | R410A | R410A | R410A | R410A |
| Refrigerant fluid quantity (kg) | 2,02 | 2,1 | 2,1 | 1,75 | 2,21 | 2,96 | 2,96 | 3,1 |
| Evacuation of condensate | R-3/4"-PVC-25 | | | | | | | |
| Acoustic power (dB(A)) | 71,5 | 71,5 | 71,5 | 73,6 | 73,6 | 76,7 | 76,7 | 76,7 |

*standard unit, in the following nominal conditions : air 30°C, humidity 70%, Standard mode
** Excluding the power consumption of electric heating options"

## ELECTRICAL RESISTANCE OPTION

| DF2 Through-the-wall with titanium condenser | DF2-03MTC | DF2-05MTC | DF2-05TTC | DF2-08MTC | DF2-08TTC | DF2-10MTC | DF2-10TTC | DF2-12TTC |
|---|---|---|---|---|---|---|---|---|
| Electrical resistance 4,5kW* | R1024000 | R1024000 | R1024100 | R1024000 | R1024100 | R1024300 | R1024400 | R1024400 |
| Electrical resistance 9,0kW* | na | na | na | na | R1024200 | na | R1024500 | R1024500 |

* Electric resistance max absorbed intensity (A) is 19,56 A for 4,5kW and 12,99 A for 9kW

## HOT WATER COIL OPTION SPECIFICATIONS

| DF2 Through-the-wall with titanium condenser | DF2-03MTC | DF2-05MTC | DF2-05TTC | DF2-08MTC | DF2-08TTC | DF2-10MTC | DF2-10TTC | DF2-12TTC |
|---|---|---|---|---|---|---|---|---|
| Hot water coil references | R1024600 | R1024600 | R1024600 | R1024600 | R1024600 | R1024700 | R1024700 | R1024700 |
| Power (kW) with primary at 50 - 40° / 90 - 70° | 4,74 / 14,86 | 4,74 / 14,86 | 4,74 / 14,86 | 5,65 / 17,81 | 5,65 / 17,81 | 7,07 / 22,23 | 7,07 / 22,23 | 7,07 / 22,23 |
| Water flow ($m^3$/h) with primary at 90 / 70°C | 0,66 | 0,66 | 0,66 | 0,79 | 0,79 | 0,99 | 0,99 | 0,99 |
| Load loss (mCE) with primary at 90/70°C | 1,69 | 1,69 | 1,69 | 2,36 | 2,36 | 1,86 | 1,86 | 1,86 |
| Connection (mm) | 3/4" CU 22 | | | | | | | |

## OPTION

| |
|---|
| DF2 chassis support |
| WT004000 |

## INSTALLATION

- Installation in a technical room nearby the pool hall.
- Blower and intake grates mounted on the part to be mortared included with the appliance.
- Possibility of double deflector grates to direct the hot dry air towards the windows.
- Hot water coil assembled inside the appliance (option).
- Extra electric heating using incorporated electric heating elements (option).
- Filter on the intake.
- Reversible installation: right-hand (standard) or left-hand (optional) access to the technical door.

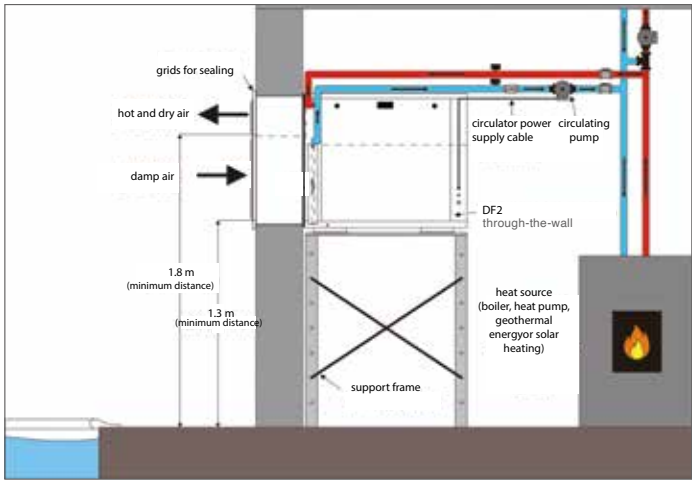


## WEIGHT AND DIMENSIONS

| DF2 Through-the-wall with titanium condenser | DF2-03MTC | DF2-05MTC | DF2-05TTC | DF2-08MTC | DF2-08TTC | DF2-10MTC | DF2-10TTC | DF2-12TTC |
|---|---|---|---|---|---|---|---|---|
| Weight (kg) | 121 | 122 | 122 | 125 | 125 | 155 | 155 | 157 |
| A | 1036 | | | | | | | |
| B | 759 | | | | | 863 | | |
| C | 861 | | | | | 999 | | |
| D | 621 | | | | | 652 | | |
| E | 445 | | | | | 580 | | |
| F | 621 | | | | | 652 | | |
| G | 281 | | | | | 283 | | |

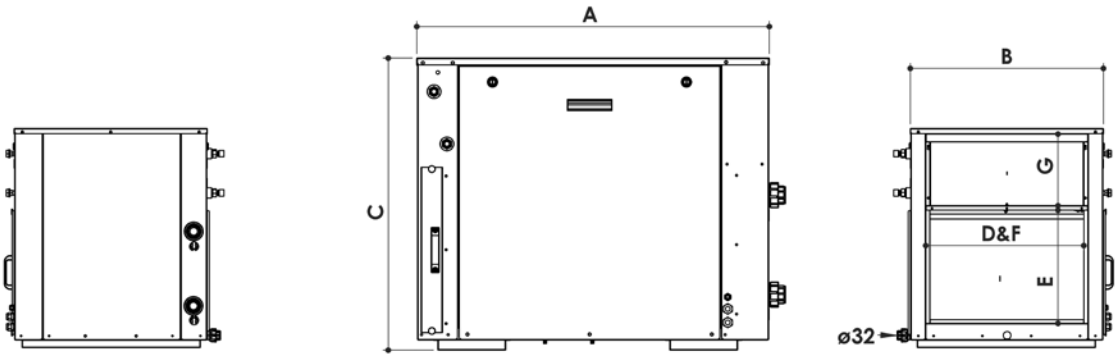

DEHUMIDIFICATION

# CAE

+ Vertical, ducted installation with modular air intake/outlet configurations
+ Available in 4 capacities (8 to 13.5 l/h)
+ Air heating options (electrical heating or hot water coil)
+ Titanium water condenser option, enabling to re-use the excess heat to warm the pool

2 YEAR WARRANTY

MADE IN SPAIN

HYGRO CONTROL

EASY INTALLATION

## ACCESSORIES INCLUDED IN THE PACK

Hygro control box

## PRODUCT REFERENCE

| CAE ducted | 508M | 508T | 510T | | 513T | |
|---|---|---|---|---|---|---|
| Standard model | W28CAE8M | W28CAE8 | W28CAE10 | | W28CAE13 | |
| Model with water condenser option | W28CAE8MC | W28CAE8C | W28CAE10C | | W28CAE13C | |
| Model with electric heating option | W28CAE8ME | W28CAE8E | W28CAE10E9 | W28CAE10E18 | W28CAE13E9 | W28CAE13E18 |
| | 4,5 kW | 9 kW | 9 kW | 18 kW | 9 kW | 18 kW |
| Model with electric heating option and water condenser | W28CAE8MEC | W28CAE8EC | W28CAE10E9C | W28CA10E18C | W28CAE13E9C | W28CA13E18C |
| | 4,5 kW | 9 kW | 9kW | 18kW | 9 kW | 18 kW |
| Model with hot water coil option | W28CAE8MB | W28CAE8B | W28CAE10B | | W28CAE13B | |
| | 23 kW | 23 kW | 35 kW | | 41 kW | |
| Model with Model with hot water coil option and water condenser | W28CAE8MBC | W28CAE8BC | W28CAE10BC | | W28CAE13BC | |
| | 23 kW | 23 kW | 35 kW | | 41 kW | |

## TECHNICAL SPECIFICATIONS

| CAE ducted**** | 508M | 508T | 510T | 513T |
|---|---|---|---|---|
| Capacity (l/h)* | 8 | | 10 | 13,5 |
| Absorbed power*** (W) | 2710 | | 4040 | 5430 |
| Nominal airflow ($m^3$/h) | 2040 | | 2720 | 3400 |
| Air flow ($m^3$/h) | 2400 | | 3050 | 3800 |
| Min. air flow ($m^3$/h) | 1780 | | 2380 | 2970 |
| Available pressure (mCE) | 15 | | 19 | 23 |
| Electric power supply | 220-240V / 1 N~ / 50Hz | 380-400V / 3N~ / 50Hz | | |
| Nominal absorbed intensity (A)*** | 17,5 | 5,3 | 8,5 | 11 |
| Max. absorbed intensity (A)*** | 37,1 | 8 | 14,5 | 17 |
| Refrigerant fluid quantity (kg) | 1,3/1,45 (1) | | 2,2/2,5 (1) | |
| Accoustic Power ((dB(A))** | - | 77,6 | - | 77,6 |

For all CAE orders a deposit of 30% will be requested with the order.
* Standard unit, in the following nominal conditions: air 30°C, humidity 70%.
** Values measured and certified in compliance with EN ISO 3741 & EN ISO 354 standards, by CCTM (Centre de Transfert de Technologie du Mans) on standard units.
*** excluding the power consumption of electric heating option.
**** An annual check of the sealing of the refrigerating circuit must be carried out for all refrigerating equipment with a load in refrigerating fluid >2 kg and < 30 kg (cf. Art 3 7/05/05 regulation, French decree n° 737-2007).
CAE 510 single phase on request.
(1) for units with water condenser option.

## HOT WATER COIL SPECIFICATIONS

| CAE ducted | 508M | 508T | 510T | 513T |
|---|---|---|---|---|
| Power (kW) with primary at 50-40 °C / 90-70 °C | 5,9 / 23 | | 9,8 / 35 | 11,6 / 41 |
| Water flow ($m^3$/h) with primary at 90/70°C | 1 | | 1,6 | 1,9 |
| Load loss (mCE) with primary 90/70°C | 1,25 | | 1,9 | 2,5 |
| Connection (mm) | 20 / 27 male thread | | | |

## EXTRACTION AND BLOWER OPTIONS

- Installation of an appliance with the TITANIUM water condenser option.
- Damp air intake: the standard intake is installed in the lower part at the rear of the CAE. Optionally, the intake can be installed in the lower part on the left or right hand sides of the CAE.
- Dry air blower: the standard dry air blower is installed in the upper part on the top of the CAE. Optionally the blower can be installed on the top part on the front or rear face of the CAE.

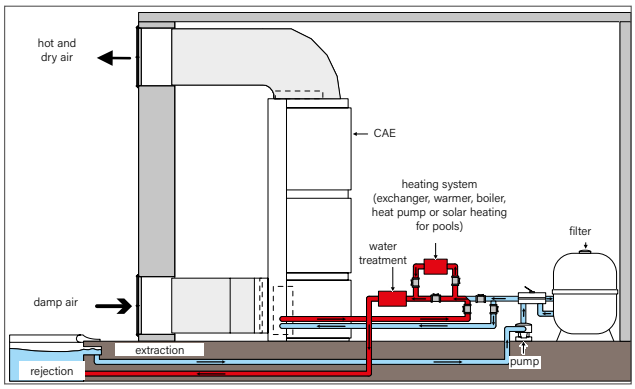


## EXTRACTION AND SUPPLY

| CAE ducted | 508M | 508T | 510T | 513T |
|---|---|---|---|---|
| Extractor on the left (frame + filter) 1 | W28REGA | | | |
| Extractor on the right (frame + filter) 2 | W28REDR | | | |
| Rear blower (frame) 3 | W28SOAR | | | |
| Front blower (frame) 4 | W28SOAV | | | |

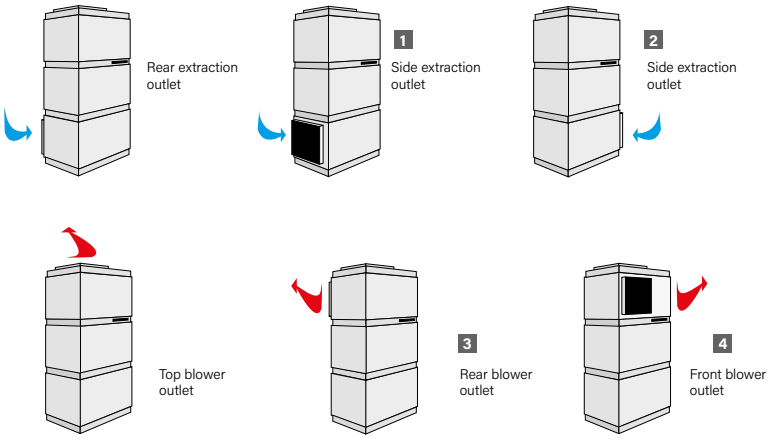

# CAE

## EXTRACTION AND SUPPLY BOX

| CAE ducted | 508M | 508T | 510T | 513T |
|---|---|---|---|---|
| Diameter | Ø 400 | | Ø 500 | |
| Circular angled outlet | WCH01251 | | WCH01252 | |
| System central intake box | WCH01253 | | WCH01254 | |
| Intake box for 625 x 425 grate | WCH03719 | | Contact us | |

Other accessories or casing: contact us

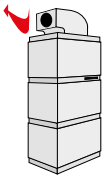

5 Circular angled outlet

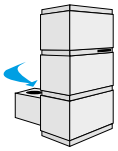

6 Intake box

## SOUND TRAP

| CAE ducted | 508M | 508T | 510T | 513T |
|---|---|---|---|---|
| Diameter | Ø 400 | | Ø 500 | |
| Sound trap | WCH03682 | | WCH03683 | |

## CAE TECHNICAL ROOM + DUCTS

- Installation of an appliance with the TITANIUM water condenser option.
- Damp air intake: the standard intake is installed in the lower part at the rear of the CAE. Optionally, the intake can be installed in the lower part on the left or right hand sides of the CAE.
- Dry air blower: the standard dry air blower is installed in the upper part on the top of the CAE. Optionally the blower can be installed on the top part on the front or rear face of the CAE.

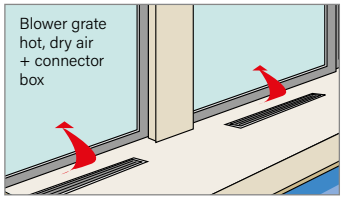


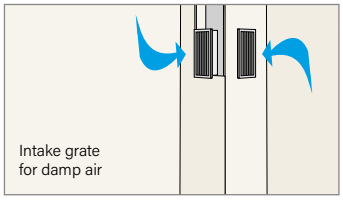

## DIMENSIONS (MM) AND WEIGHT

| CAE ducted | 508M | 508T | 510T | 513T |
|---|---|---|---|---|
| Weight (kg, excluding accessories and options) | 228 | | 235 | 240 |

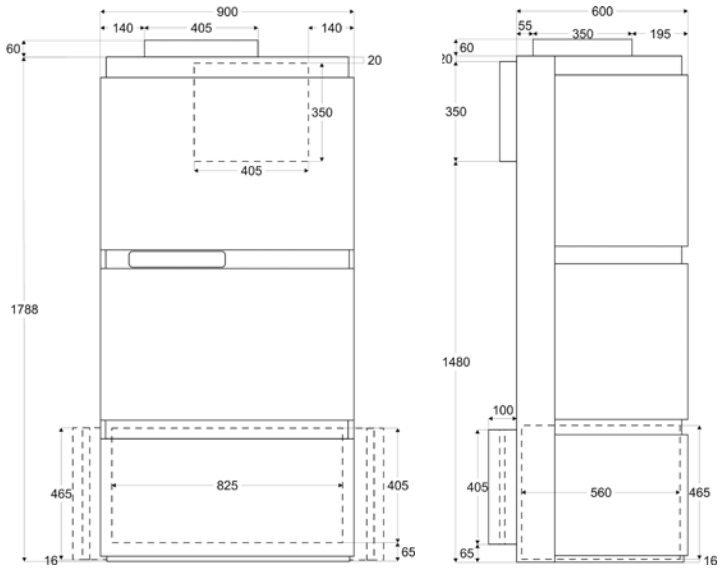


## AIR EXTRACTION AND SUPPLY ACCESSORIES

| CAE ducted | 508M | 508T | 510T | 513T |
|---|---|---|---|---|
| Diameter | Ø 400 | | Ø 500 | |
| Circular rear extraction accessories (1) | WCH01245 | | WCH01246 | |
| Circular side extraction accessories (1) | WCH01247 | | WCH01248 | |
| Circular top extraction accessories (2) | WCH01249 | | WCH01250 | |
| Circular front/rear bloweraccessories (1) | WCH01249 | | WCH01250 | |

## OPTIONAL ACCESSORIES

| 625 x 425 grate (plan for 2 grates) | Double 625 x 425 deflector (blower) | Sound trap | Blower angle | Remote regulator box for the dehumidifier | Remote regulator box for 2 dehumidifiers |
|---|---|---|---|---|---|
| WTT02355 | WTT02366 | WCH01234 | WCH01255 | R0771000 | R0771100 |

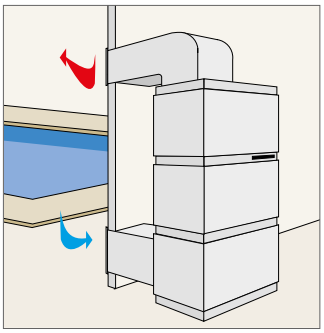

2 YEAR WARRANTY

MADE IN SPAIN

HYGRO CONTROL

EASY INTALLATION

DEHUMIDIFICATION

# OMEGA

+ Vertical, ducted installation with modular air intake/outlet configurations
+ Available in 5 capacities (10 to 28 l/h)
+ Air heating options (electrical heating or hot water coil)
+ Titanium water condenser option, enabling to re-use the excess heat to warm the pool

## ACCESSORIES INCLUDED IN THE PACK

Hygro control box

## PRODUCT REFERENCES

| OMEGA ducted | 10T | 14T | 16T | 20T |
|---|---|---|---|---|
| Standard model | W280M10 | W280M14 | W280M16 | W280M20 |
| Model with water condenser option | W280M10C | W280M14C | W280M16C | W280M20C |
| Model with electric heating option | W280M10E | W280M14E | W280M16E | W280M20E |
| Model with electric heating option and condenser | W280M10EC | W280M14EC | W280M16EC | W280M20EC |
| Model with hot water coil option | W280M10B | W280M14B | W280M16B | W280M20B |
| Model with hot water coil option and condenser | W280M10BC | W280M14BC | W280M16BC | W280M20BC |

## TECHNICAL FEATURES

| OMEGA ducted | 10T | 14T | 16T | 20T |
|---|---|---|---|---|
| Capacity (l/h)* | 10 | 14 | 16 | 20 |
| Absorbed power*** (W) | 3 840 | 4 390 | 5 830 | 6 430 |
| Air flow ($m^3$/h) | 3 000 | 4 000 | 5 000 | 6 000 |
| Available pressure (mCE) | 20 | | | |
| Electric power supply | 380-400V / 3N~ / 50Hz | | | |
| Nominal absorbed intensity (A)*** | 7,6 | 9 | 12 | 16,4 |
| Max. absorbed intensity (A)*** | 13 | 16 | 18,5 | 20,1 |
| Refrigerant fluid | R407C | | | |
| Refrigerant fluid quantity (kg) | 3,5/3,8 (1) | | 3,5/3,9 (1) | 3,5/3,8 (1) |
| Accoustic Power ((dB(A))** | - | 83,6 | - | 82 |

For all OMEGA orders a deposit of 30% will be requested with the order.
* Standard unit, in the following nominal conditions: air 30°C, humidity 70%.
** Values measured and certified in compliance with EN ISO 3741 & EN ISO 354 standards, by CCTM (Centre de Transfert de Technologie du Mans) on standard units.
*** excluding the power consumption of electric heating option.
**** An annual check of the sealing of the refrigerating circuit must be carried out for all refrigerating equipment with a load in refrigerating fluid >2 kg and < 30 kg (cf. Art 3 7/05/05 regulation, French decree n° 737-2007).
(1) for units with water condenser option.

## ELECTRIC RESISTANCE SPECIFICATIONS

| OMEGA ducted | 10T | 14T | 16T | 20T |
|---|---|---|---|---|
| Electric resistance power (kW) | 24 | 34 | 42 | 53 |
| Electric resistance Max. absorbed intensity (A) | 9,5 | 11,6 | 13,6 | 15,2 |

## HOT WATER COIL SPECIFICATIONS

| OMEGA ducted | 10T | 14T | 16T | 20T |
|---|---|---|---|---|
| Power (kW) with primary at 50-40 °C / 90-70 °C | 9,5 / 24 | 11,6 / 34 | 13,6 / 42 | 15,2 / 53 |
| Water flow ($m^3$/h) with primary at 90/70°C | 1,66 | 2,03 | 2,35 | 2,64 |
| Load loss (mCE) with primary 90/70°C | 0,93 | 1,34 | 1,76 | 2,17 |
| Connection (mm) | 20 / 27 male thread | | | |

## INSTALLATION

- Installation in a technical room nearby the pool hall.
- Damp air extractor frame on the rear face for connection to wall or ceiling extractor duct.
- Hot, dry air blower either under or over the system for direct assembly on buried ducts or ceiling service area ducts.
- Simplified aeraulic assembly with very little load loss making it possible to keep the available ventilator pressure for the duct network.
- Hot water coil or extra electric heating fitted inside the system (see options).
- A remote regulator box, temperature sensor and humidity sensor in a duct and box enable you to adjust the operation of one unit or two dehumidifier units.

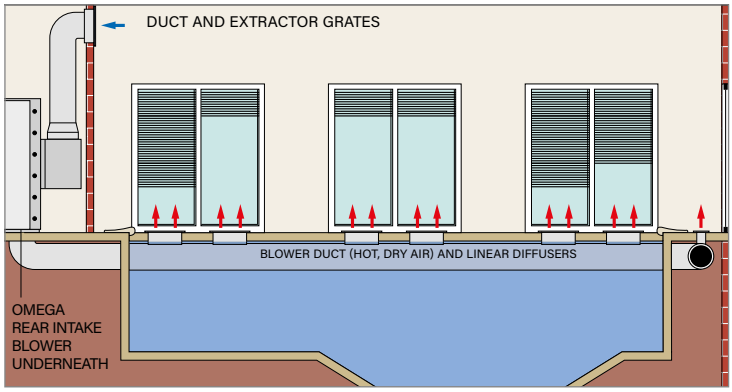


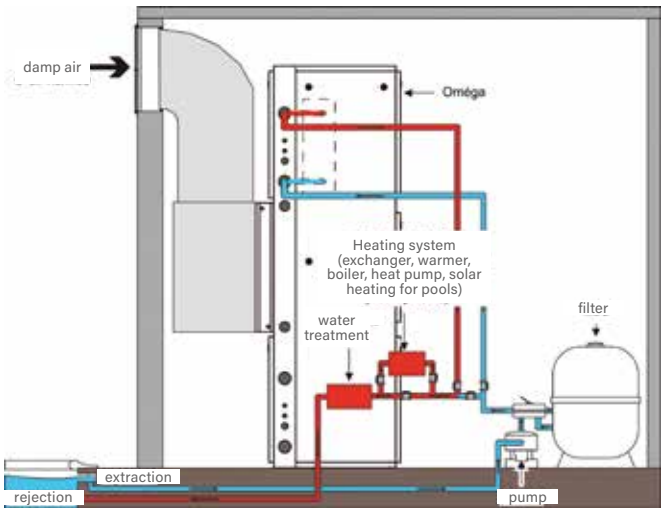

## BLOWER OPTIONS

| OMEGA ducted | | 10T | 14T | 16T | 20T |
|---|---|---|---|---|---|
| Blower on the top | 1 | W28SODE | | | W28SODE20 |
| Blower on the top to the front | 2 | W28SOHAV | | | W28SOHAV20 |
| Blower on the top to the rear | 3 | W28SOHAR | | | W28SOHAR20 |
| Blower on the bottom to the front | 4 | W28SOBAV | | | |
| Blower on the bottom to the rear | 5 | W28SOBAR | | | |

The standard blower on the OMEGA systems is installed under the system (blower inversed compared to the CEA). Optionally, blower can be installed on the top or bottom and either to the front of the rear.

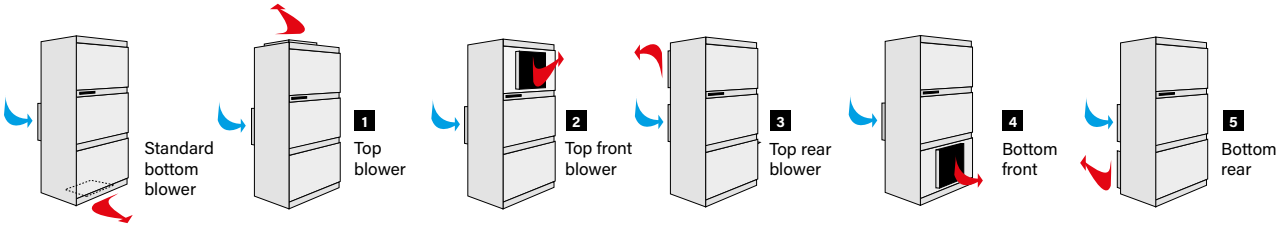


## OMEGA INTAKE

| OMEGA ducted | | 10T | 14T | 16T | 20T |
|---|---|---|---|---|---|
| Extractor grate 1000 x 600 (4000 à 6000 m³/h) with counter frame | Grate | WFA01477 | | | |
| | Counter frame | WFA01479 | | | |
| Sound trap 600 mm (for direct intake from 100 X 600 grate) 1 | | WCH01236 | | | |
| Extraction box for Omega systems | Caisson | WCH02822 | | WCH03048 | |
| | Diameter | Ø500 | | Ø630 | |
| Intake box for 1000 x 600 grate 2 | Caisson | WCH02822 | | WCH03048 | |
| | Diameter | Ø500 | | Ø630 | |

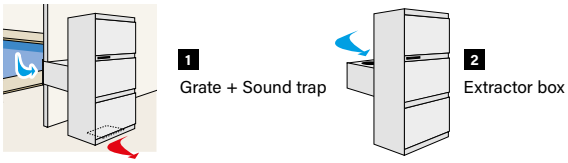

## EXTRACTION AND SUPPLY ACCESSORIES

| OMEGA ducted | | 10T | 14T | 16T | 20T |
|---|---|---|---|---|---|
| Diameter | | Ø500 | | Ø630 | |
| Rear circular extractor accessories | 3 | WCH03701 | | WCH03702 | |
| Front/rear circular blower accessories | 4 | WCH03595 | | WCH03331 | |
| Upper circular blower accessories | 5 | WCH03705 | | WCH03706 | |

Other accessories or casing: contact us.

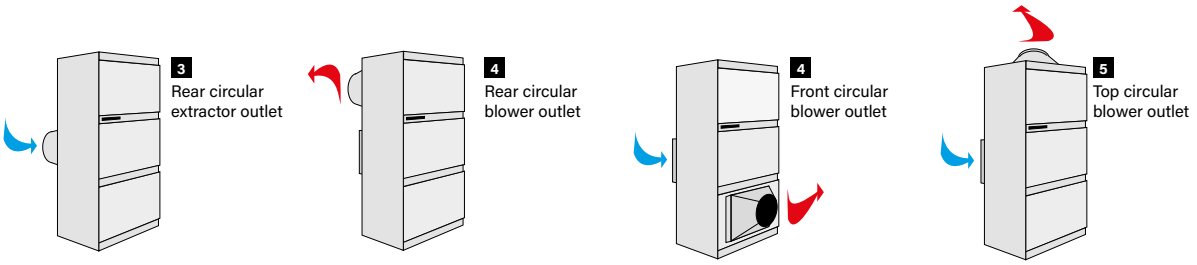


## WEIGHT AND DIMENSIONS

| OMEGA ducted | 10T | 14T | 16T | 20T |
|---|---|---|---|---|
| Weight (kg) | 342 | 344 | 346 | 397 |

| | Oméga 10 to 20 | Oméga 28 |
|---|---|---|
| A | 1940 | 2170 |
| B | 1150 | 1734 |
| C | 625 | 652 |
| D | 70 | 102 |
| E | 445 | 413 |
| F | 410 | 908 |
| G | 295 | 413 |
| H | 240 | 190 |
| I | 345 | 387 |
| J | 75 | 240 |
| K | 225 | 216 |
| L | 655 | 673 |
| M | 630 | 824 |
| N | 60 | 50 |
| O | 20 | 0 |
| Extractor Width | 1060 | 1650 |

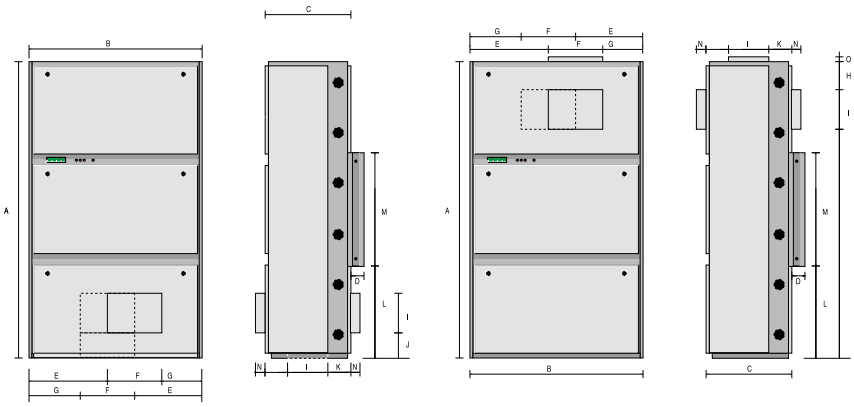

Blower at the bottom

Blower at the top

## ACCESSOIRES EN OPTION

| Filters for OMEGA 10, 14, 16 et 20 tri | Filters for OMEGA 28 tri | Remote regulator box for the dehumidifier |
|---|---|---|
| WSD01916 | WSD03350 | R0771000 |

DEHUMIDIFICATION

# ENERGY Fan

- + Air renewal: better pool hall hygiene
- + Wall-mounted fan with backdraft damper
- + Aesthetic finish and silent working

## DESCRIPTION

- Plan a fresh air intake (featuring an incoming airflow lower or equal to the fan's extraction airflow so as to guarantee a slight underpressure in the pool hall.)
- Axial fan
- ABS body
- 150 Model : 1 speed extract fan, control with switch or servo control (cord included)
- 500, 900 and 1800 Models : variable speed, start only with RC4M control box (sold as accessory)

2 YEAR WARRANTY

EASY INTALLATION

## ACCESSORIES INCLUDED IN THE PACK

- Through-the-wall duct
- Outdoor grate

## PRODUCT REFERENCES

| Model | ENERGY 150 FAN | ENERGY 500 FAN | ENERGY 900 FAN | ENERGY 1800 FAN |
|---|---|---|---|---|
| Standard Model | WD001208 | WD001209 | WD001210 | WD001211 |

## TECHNICAL FEATURES

| Model | ENERGY 150 FAN | ENERGY 500 FAN | ENERGY 900 FAN | ENERGY 1800 FAN |
|---|---|---|---|---|
| Max. extraction airflow | 280 | 445 | 918 | 1820 |
| Eco extraction airflow | - | 245 | 820 | 1341 |
| Max. absorbed power (W) | 33 | 38 | 50 | 100 |
| Eco absorbed power (W) | - | 20 | 37 | 70 |
| Max. sound pressure at 3 m | 43 | 45 | 49 | 51 |
| Eco sound pressure at 3 m | - | 27 | 46 | 45 |
| Electric power supply | 220-240V / 1 N~ / 50Hz | | | |

## WEIGHT AND DIMENSIONS

| Model | ENERGY 150 FAN | ENERGY 500 FAN | ENERGY 900 FAN | ENERGY 1800 FAN |
|---|---|---|---|---|
| Weight (kg) | 0,99 | 4,6 | 4,9 | 9,5 |
| A x B | 200 x 200 | 269 x 272 | 342 x 342 | 420 x 420 |
| C | 100 | 134,5 | 171 | 206,5 |
| D | 100 | 737,5 | 175 | 214,5 |
| E | 200 | 269 | 337 | 413 |
| F | 114,5 | 128 | 130 | 169,4 |
| Wall opening | Ø160 | 260 x 260 | 330 x 330 | 410 x 410 |
| Wall width (min/max) | 100/375 | 200/380 | 200/380 | 200/380 |

## ACCESSOIRES EN OPTION

RC4M control box for Energy 500, 900 and 1800
Box to control up to 5 fans

WD001212

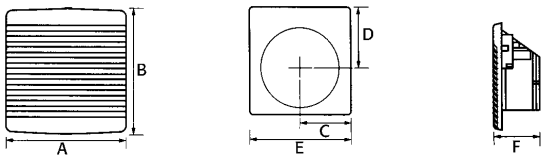

# CANAL FAST ECM Fan

**+ Air renewal: swimming pool hygiene maintained**
**+ Low energy centrifugal duct fan with embedded variable speed**
**+ Easy to install with quick-fix system**

2 YEAR WARRANTY

EASY INTALLATION

## DESCRIPTION

- Use a fresh air inlet (fresh air flow less than or equal to the ventilator flow rate) to slightly reduce pressure in the pool room
- Install horizontally or vertically at all points along the duct
- Housing: polypropylene body and flanges - IP44 protection
- Turbine: centrifugal with diagonal blades, propeller in ABS, mounted directly onto the body of the engine
- Motorization : High efficiency ECM motor (Electronic Communication motor) with external rotor, singles phase 220-240V - 50/60Hz
- Speed variation by integrated potentiometer

## PRODUCT REFERENCES

| Model | ENERGY 150 FAN | ENERGY 500 FAN | ENERGY 900 FAN | ENERGY 1800 FAN |
|---|---|---|---|---|
| Standard Model | WFA03484 | WFA03485 | WFA03486 | WFA03487 |

## TECHNICAL FEATURES

| Model | ENERGY 150 FAN | ENERGY 500 FAN | ENERGY 900 FAN | ENERGY 1800 FAN |
|---|---|---|---|---|
| Max. extraction airflow | 280/561 | 320/647 | 620/1250 | 800/1650 |
| Power (W) | 70 | 70 | 165 | 255 |
| Electric power supply | 220-240V / 1 N~ / 50/60 Hz | | | |

## WEIGHT AND DIMENSIONS

| Model | ENERGY 150 FAN | ENERGY 500 FAN | ENERGY 900 FAN | ENERGY 1800 FAN |
|---|---|---|---|---|
| Weight (kg) | 1,4 | 2,0 | 4,0 | 6,0 |
| D | 123 | 147 | 197 | 247 |
| W | 221 | 241 | 266 | 327 |
| L | 257 | 313 | 302 | 383 |
| H | 195 | 208 | 237 | 286 |

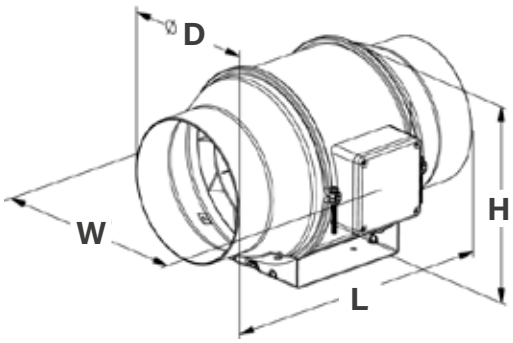

# Floor slot diffusers

Minimum manufacturing time : 3 weeks

- **+ Attractive and discreet design : perfect integration flush with the level of the floor**
- **+ Ideal air supply distribution : solution specially adapted for bay windows (air supply along the bay window)**
- **+ New products, new heights, and new kits to make installation easier**

## PRODUCT REFERENCES

| Height (mm) | S08-1 | S10-1 | S12-1 | S16-2 | S20-2 | S24-2 | S30-3 |
|---|---|---|---|---|---|---|---|
| 100-150 | WD001422 | WD001424 | WD001426 | WD001429 | WD001431 | WD001433 | WD001435 |
| 150-200 | WD001423 | WD001425 | WD001427 | WD001430 | WD001432 | WD001434 | WD001436 |

*The height corresponds to that between the concrete slab and the finished level. It must not be less than 10 cm.

Floor slot diffusers can be cut straight across or at a 45° angle to the desired length (within dimension limits).
Floor slot diffusers are provided with any Zodiac dehumidifier unit order.
Contact our Design Office (BE@zodiac.com) for design and quotation.

## TECHNICAL SPECIFICATIONS

The slot diffuser selection (number of slots) depends on the airflow and on the length of the diffuser.

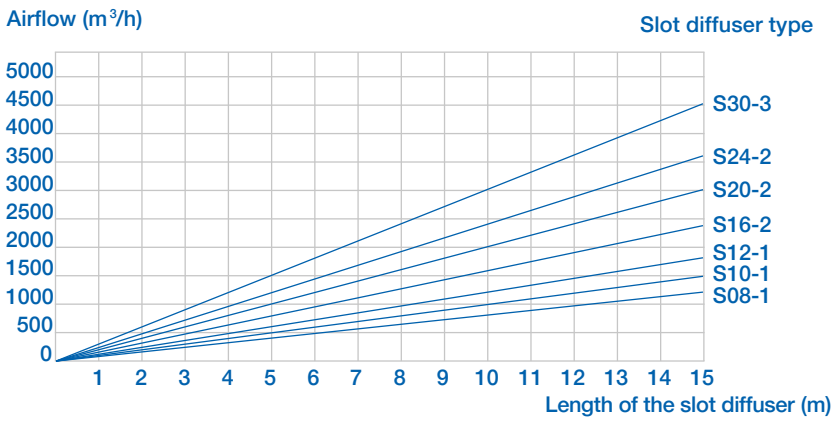


## TYPE AND QUANTITY OF TAPPING TO ORDER FOR EACH METRE OF FLOOR SLOT DIFFUSER

| Type of floor slot diffuser | S08-1 | S10-1 | S12-1 | S16-2 | S20-2 | S24-2 | S30-3 |
|---|---|---|---|---|---|---|---|
| Tapping/linear metre | 2xD100 | 2xD100 | 2xD100 | 3xD100 or 2xD125 | 3xD100 or 2xD125 | 2xD160 | 2xD160 |

## DIMENSIONS (EN MM)

| | A | B | C | D | H |
|---|---|---|---|---|---|
| S08-1 | 8 | 18 | 109 | 149 | 2 possible heights:<br>• 100 to 150 mm<br>• 150 to 200 mm |
| S10-1 | 10 | 20 | 111 | 151 | |
| S12-1 | 12 | 22 | 113 | 153 | |
| S16-2 | 8 | 34 | 125 | 165 | |
| S20-2 | 10 | 38 | 129 | 169 | |
| S24-2 | 12 | 42 | 133 | 173 | |
| S30-3 | 10 | 56 | 147 | 187 | |

S08-1
S10-1
S12-1

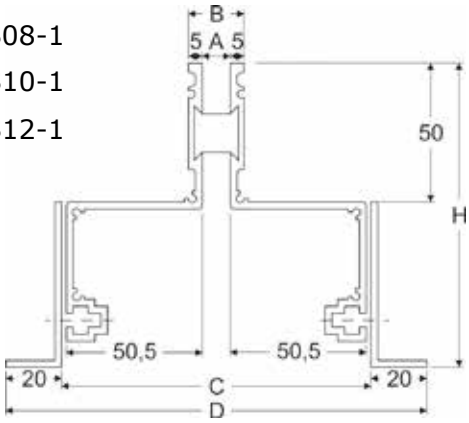


S16-2
S20-2
S24-2

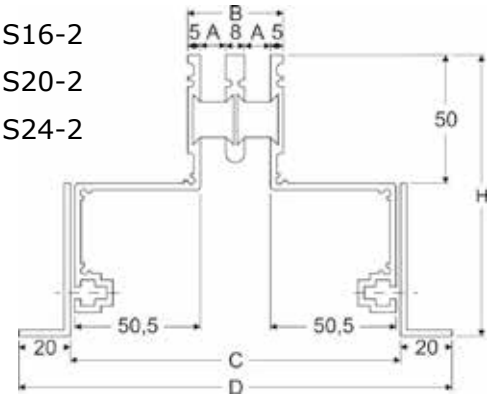


## INSTALLATION

Example with a hollow block floor

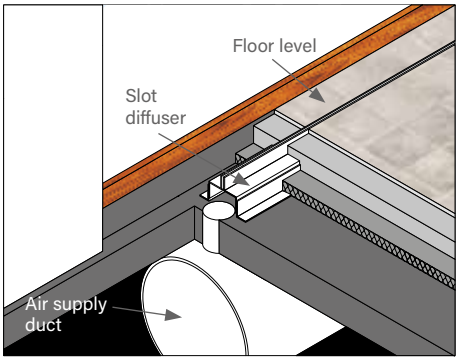

# Ventilation accessories

## FRESH AIR ACCESSORIES

Fresh air grate with weather protection grate and wall duct (wall thickness 250 to 400mm)
Canal Fast : compact fan to be installed in a duct

| Designation / Model | Reference |
|---|---|
| grate PA160 (200 m³/h) | WFA03480 |
| grate PA200 (300 m³/h) | WFA03481 |
| grate PA250 (400 m³/h) | WFA03482 |
| grate PA315 (700 m³/h) | WFA03483 |
| Damper Ø160 | WCH03758 |
| Damper Ø200 | WCH03759 |
| Damper Ø250 | WCH03760 |
| Damper Ø315 | WCH03761 |

## EXTRACTOR OR BLOWER GRATE

Natural anodised aluminium grate with sealing frame. Plan to use standard grates for the intake and double deflector option grates for the blowers. Plan for adjusters when there are several blower grates. Wall or ceiling mounted. Galvanised adapters can be used to connect the grate directly to the circular duct. Res.: 610 x 210 or 610 x 410.

| Position | Designation / Model | Reference |
|---|---|---|
| | Damper + double defection 625 x 225 | WTT02369 |
| | Damper + double defection 625 x 425 | WTT02370 |
| 6 | 625 x 225 grate (flow 500 to 1250 m³/h) | WTT02354 |
| | 625 x 225 counter frame | WTT02358 |
| | 625 x 425 grate (flow 1250 to 2500 m³/h) | WTT02355 |
| | 625 x 425 counter frame | WTT02359 |
| | Double deflector 625 x 225 | WTT02365 |
| | Double deflector 625 x 425 | WTT02366 |
| | Regulator 625 x 225 | WTT02367 |
| | Regulator 625 x 425 | WTT02368 |
| 7 | Adapter 600 x 200 (Ø 315) | WCH01226 |
| | Adapter 600 x 200 (Ø 400) | WCH03684 |
| | Adapter 600 x 400 (Ø 500) | WCH01227 |
| | Adapter 600 x 400 (Ø 630) | WCH03685 |

## GRATE FOR CIRCULAR DUCT

Steel grey painted blower grate, double deflector flow regulator. Direct assembly onto circular ducts.

| Designation / Model | Reference |
|---|---|
| grate 625 x 75 on Ø 160 to 400 (250 m³/h) | WFA03467 |
| grate 625 x 125 on Ø 315 to 900 (400 m³/h) | WFA03309 |
| Regulator 625 x 75 | WFA03468 |
| Regulator 625 x 125 | WFA03310 |

## REINFORCED 600 X 400 GROUND ATE

Reinforced natural aluminium ground grate. Sealing frame supplied. Reinforced frames and profiles.

| Position | Designation / Model | Reference |
|---|---|---|
| 1 | Floor grate 600 x 400 (flow 1000 to 2500 m³/h) | WPA01804 |

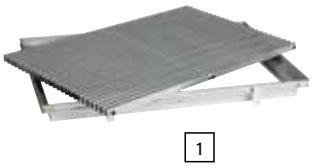


## CEILING SLOT DIFFUSER

Anodised natural aluminium ceiling slot diffuser with adapter and regulator. Installation in ceiling service area. Height 285 mm. Ø 160 connection prepared.

| Position | Designation / Model | Reference |
|---|---|---|
| 8 | 2 Slot diffuser L 900 mm (250 m³/h) | WAL03030 |
| 9 | Flexible duct Ø 160 (linear m) | WCH01183 |
| 10 | Connection 45°, Ø 160/315 | WCH01256 |
| | Connection 45°, Ø 160/315 | WCH01256 |
| | Punching 45° Ø 160/400 | WCH01260 |

## FLEXIBLE DUCT

| Position | Designation / Model | Reference |
|---|---|---|
| 9 | Flexible duct Ø 160 (linear m) | WCH01183 |
| | Flexible duct Ø 200 (linear m) | WCH01185 |
| | Flexible duct Ø 315 (linear m) | WCH01186 |
| | Flexible duct Ø 400 (linear m) | WCH01187 |
| | Flexible duct Ø 500 (linear m) | WCH01188 |

## BLOWER GRATE

Natural anodised aluminium, fixed wing, flow regulation included. Connection, rectangular and connecting boxes: galvanised metal box fitted between the grate and the blower duct, see diagram below.

| Position | Designation / Model | Reference |
|---|---|---|
| 2 | Supply grate 500 x 50 (flow 75 to 125 m³/h) reservation | WAL03029 |
| | Supply grate 500 x 75 (flow 125 to 175 m³/h) reservation | WAL02750 |
| | Supply grate 1000 x 50 (flow 150 to 250 m³/h) reservation | WAL02748 |
| | Supply grate 1000 x 75 (flow 250 to 350 m³/h) reservation | WAL02751 |
| | Supply grate 1000 x 100 (flow 350 to 500 m³/h) reservation | WAL03028 |
| 3 | Rectangular Connection 500 x 50 Adjustable height 200 to 340 mm | WCH03691 |
| | Rectangular Connection 500 x 75 Adjustable height 200 to 340 mm | WCH01219 |
| | Rectangular Connection 1000 x 50 Adjustable height 200 to 340 mm | WCH01220 |
| | Rectangular Connection 1000 x 75 Adjustable height 200 to 340 mm | WCH01221 |
| | Rectangular Connection 1000 x 100 Adjustable height 200 to 340 | WCH03692 |
| 4 | Connection box 500 x 50 Connection Ø 160 mm | WCH03693 |
| | Connection box 500 x 75 Connection Ø 160 mm | WCH01222 |
| | Connection box 1000 x 50 Connection Ø 160 mm | WCH01223 |
| | Connection box 1000 x 75 Connection Ø 160 mm | WCH01224 |
| | Connection box 1000 x 100 Connection Ø 200 mm | WCH03000 |
| 5 | Under-floor connection box 500 x 50 Connection Ø 160 mm | WCH03710 |
| | Under-floor connection box 500 x 75 Connection Ø 160 mm | WCH03711 |
| | Under-floor connection box 1000 x 50 Connection Ø 160 mm | WCH03712 |
| | Under-floor connection box 1000 x 75 Connection Ø 160 mm | WCH03713 |
| | Under-floor connection box 1000 x 100 Connection Ø 200 mm | WCH03714 |

2 + 3

2 + 4

5

## FITTING ACCESSORIES

Complete set including: perforated fixing band (2 25 m rolls), cement (3 cartridges), adhesive (2 50 m rolls), suspenders with washers and fixtures.

| Position | Designation / Model | Reference |
|---|---|---|
| 9 | Fixing accessories set | WCH03728 |
| | Fixing accessories set | WCH03728 |
| | Flexible anti-vibration sleeve width 150 mm (price per metre) | WCH03409 |
| | Flexible anti-vibration sleeve width 150 mm (price per metre) | WCH03409 |

# Ventilation accessories

## Ø 315 DUCTS AND ACCESSORIES

Galvanised metal elements thickness 6/10. Diameter Ø 315 for connection to DF 403, 405, 408.
Ducts to be installed in galleries, ceiling service area, technical facility. Plan to use PVC for buried ducts.

| Designation / Model | Reference |
|---|---|
| Flange (flat punching 90°) Ø 315 | WCH01231 |
| Galvanised duct Ø 315 (lm) shipped in 2m lengths | WCH01179 |
| Galvanised elbow 90°, Ø 315 | WCH01201 |
| Galvanised elbow 45°, Ø 315 | WCH01207 |
| Male sleeve Ø 315 | WCH01191 |
| Female sleeve Ø 315 | WCH03050 |
| Cap Ø 315 | WCH01196 |
| T 90° equal Ø 315 | WCH01211 |
| Reduction Ø315/250 | WCH03755 |

Circular duct

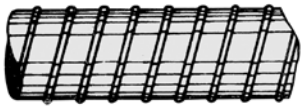

Elbow 90°

## Ø 400 DUCTS AND ACCESSORIES

Galvanised metal elements thickness 6/10. Diameter Ø 400 for 410, 412 CAE 508. Ducts to be installed in galleries, ceiling service area, technical facility. Plan to use PVC for buried ducts.

| Designation / Model | Reference |
|---|---|
| Punching 45° Ø 160/400 | WCH01260 |
| Galvanised duct Ø 400 (ml) shipped in 2m lengths | WCH01180 |
| Galvanised elbow 90° Ø 400 | WCH01203 |
| Galvanised elbow 45° Ø 400 | WCH01208 |
| Male sleeve Ø 400 | WCH01192 |
| Female sleeve Ø 400 | WCH03051 |
| Cap Ø 400 | WCH01197 |
| T 90° equal Ø 400 | WCH01212 |
| Reducer Ø 400/315 | WCH01215 |

Elbow 45°

Sleeve

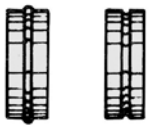

## Ø 500 DUCTS AND ACCESSORIES

Galvanised metal elements thickness 6/10. Diameter Ø 500 for CAE 510-513 and OMEGA. Ducts to be installed in galleries, ceiling service area, technical facility. Plan to use PVC for buried ducts.

| Designation / Model | Reference |
|---|---|
| Galvanised duct Ø 500 (ml) shipped in 2m lengths | WCH01181 |
| Galvanised elbow 90° Ø 500 | WCH01204 |
| Galvanised elbow 45° Ø 500 | WCH01209 |
| Male sleeve Ø 500 | WCH01193 |
| Female sleeve Ø 500 | WCH03052 |
| Cap Ø 500 | WCH01198 |
| T 90° equal Ø 500 | WCH01213 |
| Reducer Ø 500/400 | WCH01216 |
| Reducer Ø 500/315 | WCH01217 |

Cap

T 90° equal

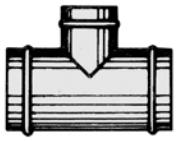

## Ø 630 DUCTS AND ACCESSORIES

Galvanised metal elements thickness 6/10. Diameter 630, for Omega 16-20. Ducts to be installed in galleries, ceiling service area, technical facility. Plan to use PVC for buried ducts.

| Designation / Model | Reference |
|---|---|
| Galvanised duct Ø 630 (ml) shipped in 2m lengths | WCH01182 |
| Galvanised elbow 90° Ø 630 | WCH03329 |
| Galvanised elbow 45° Ø 630 | WCH03424 |
| Male sleeve Ø 630 | WCH03325 |
| Female sleeve Ø 630 | WCH03720 |
| Cap Ø 630 | WCH03330 |
| T 90° equal Ø 630 | WCH03326 |
| Reducer Ø 630/500 | WCH03327 |
| Reducer Ø 630/400 | WCH03328 |

Reducer

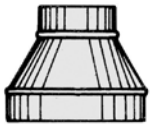

# BDP Confort Dehumidifying Unit

## DESCRIPTION

The BDP Confort heat pump is used for the dehumidification of indoor pools, using the latent heat of evaporation and the performance of the system itself to heat the pool water and the room air.

The energy savings achieved with these systems compared to traditional heating systems mean that they are virtually essential when you wish to heat an indoor pool.The wide range of models covers all market requirements.

- Made of non-corrosive magnesium coated aluminium.
- Thermal-acoustic inside insulation.
- Direct transmission single centrifugal ventilator. Radial Ventilator Optional.
- Air filter can be changed for a G4 type filter.
- Condensation collection gutter with drainpipe.
- A copper nitrogen, dehydrated and deoxidized refrigerated circuit. Air condensation.
- Ozone-safe R407C refrigerant gas charge (ecological).
- Evaporation, condensation and hot water batteries made of copper pipes with lacquered aluminium fins (specially designed for corrosive environments).
- Airtight compressor mounted on anti-vibration mounts.
- Pressure balancing expansion valve.
- High and low pressure switch.
- General security switch.
- Power source, compressor and ventilator motor protection mechanisms.
- Full adjustment of all the items included.
- Three-way valves and their regulation when a hot water coil is incorporated.

**Web Dehumidifier configurator: www.astralpool.com -> Calculation tools**

**OPTIONAL U.V. DISINFECTION SYSTEM**

### OPTIONAL

- 1 or 2 stage electric heating option to support air heating.
- Hot water coil to support air heating, with three-way valve, temperature probe and regulation (ask about primary temperatures different to standard equipment).
- Freecooling or mixed chamber and shutter to bring in outside air.
- Optional enthalpic regulation in the case of freecooling.

### GENERATION OPERATING CONDITIONS

The thermo-hygrometric conditions for these facilities that are considered optimal for materials and people include:

- Air 28°C - 30°C
- 65% HR
- Water 2°C below air temperature.

## TECHNICAL FEATURES

| Model | BDP-4 | BDP-5 | BDP-6 | BDP-8 | BDP-10 | BDP-12 | BDP-16 |
|---|---|---|---|---|---|---|---|
| Dehumidification CAP.(1) (l/h) | 4,2 | 5,2 | 5,9 | 8,3 | 11 | 12,5 | 17,35 |
| Air condensation power (kW) | 7.1 | 8.5 | 11.6 | 12.4 | 13.8 | 19.1 | 26.7 |
| **COOLING CIRCUIT** | | | | | | | |
| Type of compressor | ROTARY | | | | | | |
| Gas Load (Kg.) | 3 | 3,5 | 4 | 5 | 9 | 9 | 10 |
| Voltage (V/Ph/Hz) | 230 / 1 / 50 | | | 400 / 3 / 50 | | | |
| Max. Consumption (kW) | 1,8 | 2,4 | 3,71 | 3,66 | 4,33 | 5,49 | 6,81 |
| **FANS** | | | | | | | |
| Type | CENTRIFUGAL | | | | | | |
| Air flow rate ($m^3$/h) | 1000 | 1200 | 1800 | 2800 | 3800 | 4300 | 5500 |
| Total available pressure (2) (mca) | 15 | 15 | 20 | 20 | 20 | 20 | 20 |
| Max. consumption kW (RETURN) | 0,2 | 0,2 | 0,25 | 0,55 | 1,1 | 1,1 | 3,00 |
| **OTHER DATA** | | | | | | | |
| Ø Drain (mm) | 22 | | | | | | |
| Noise level AT 1 M (dB) | 68 | | | | 69 | | 70 |
| Weight (kg) | 100 | 110 | 160 | 182 | 270 | 360 | 448 |
| Air filters | G4 | | | | | | |
| **OPTIONAL** | | | | | | | |
| Electric heating power (W) | 5.0 | | - | - | - | - | - |
| Hot water coil power – Power (w) | 11.6 | | 22.2 | | 35.8 | | 54.9 |
| Hot water coil power – Primary T. (°C) | 90 | | | | | | |
| Hot water coil power – (°C) | 70 | | | | | | |
| Hot water coil power – Flow rate (l/h) | 500 | 500 | 990 | 990 | 1590 | 1590 | 2420 |
| Hot water coil power – Connection (Inches) | ¾" | ¾" | ¾" | ¾" | ¾" | ¾" | ¾" |

(1) For 28 °C air T. 65% RH, 24 °C water T

(2) Return plus suction

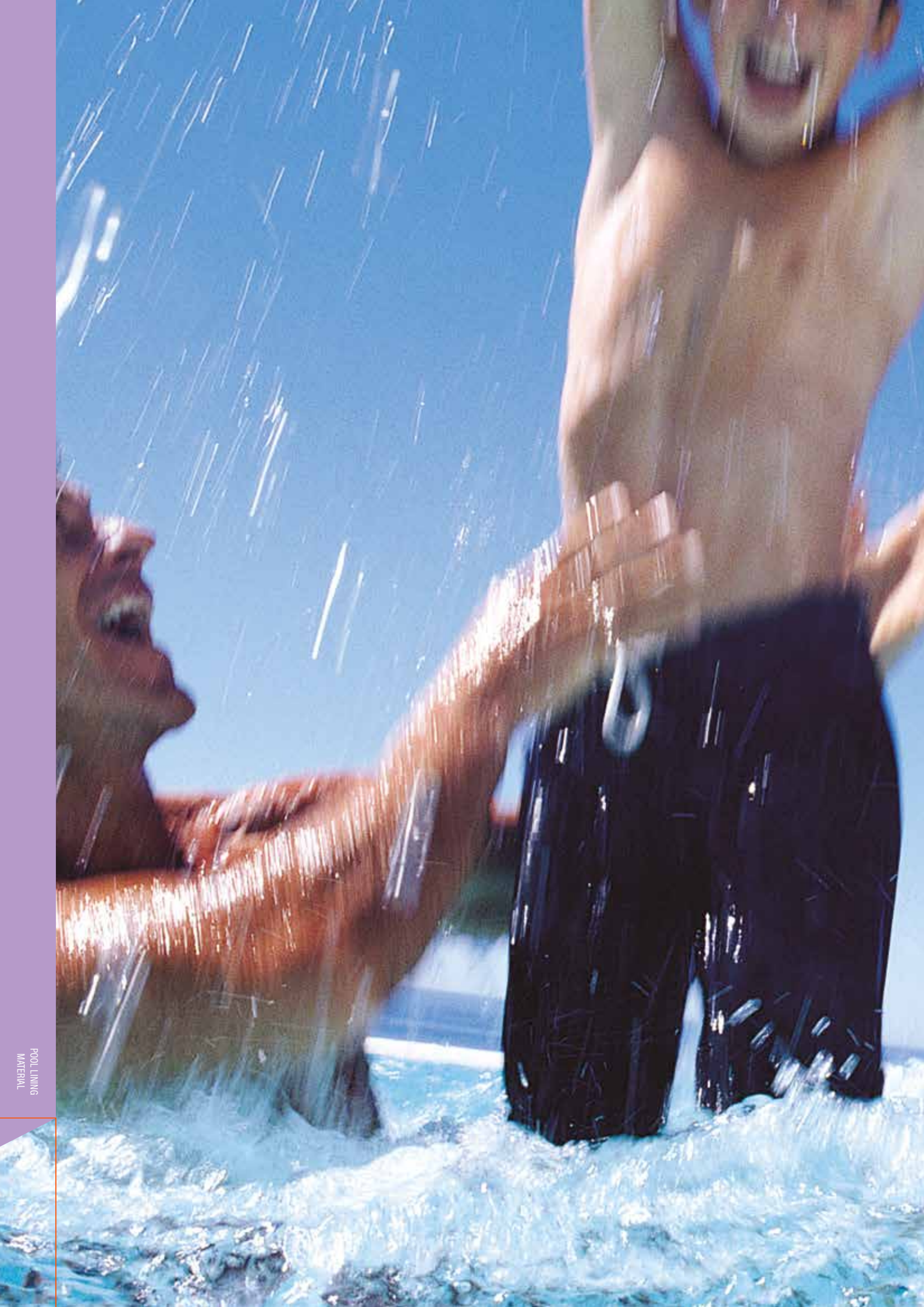

# POOL LINING MATERIAL

SOPREMA


564 SopremaPool 180/100 reinforced liner

565 SopremaPool 150/100 reinforced liner


RENOLIT ALKORPLAN


571 Renolit Alkorplan 200/100 reinforced liner

577 Renolit Alkorplan liner accessories

579 Pool shell accessories special for liner pool renovation

580 Renolit Liner accessories


ASTRALPOOL


584 Pool shell accessories special for liner pool renovation

586 Classification of liners depending on the pool

587 Liners for stairs

598 Glass tiling for spas and wellness facilities

599 Glass tiling: Projects

601 Liner and Glass tiles accessory


SB-POOL | ctx pro


602 Under water reparations solutions

# ASTRALPOOL RECOMMENDATION

## POOL FINISH COLOURS

Colours of pool shell materials recommended by AstralPool depending on the colour of your pool's finish.

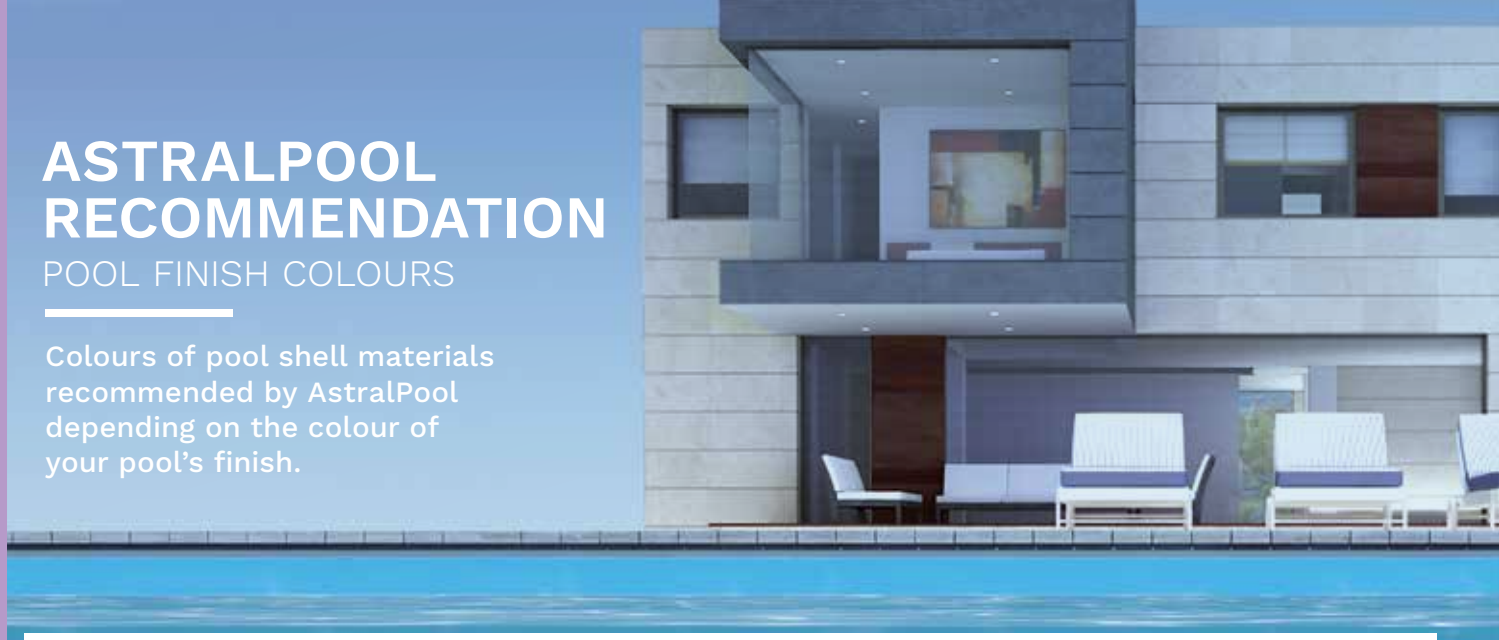

## POOL FINISH COLOURS

ASTRALPOOL RECOMMENDATION
POOL SHELL

LIGHT BLUE | ADRIATIC BLUE | CARIBBEAN GREEN | WHITE | 67497 | 54357

**WHITE**

SAND | RELAX | SUBLIME | 54316 | 54324 | 54256 (MATT - C3)

**BEIGE** CL090 RAL1015

LIGHT GREY | PLATINUM | VANITY | SAND PERSIA | FADED MIX

**LIGHT GREY CL129 RAL7004**

DARK GREY | ELEGANCE | AUTHENTIC | 54398 | FADED MIX | 66717

**ANTHRACITE** CL144 RAL7016

# SOPREMAPOOL

**SOPREMA,** a world leader in waterproofing solutions, offers a wide range of reinforced synthetic membranes for swimming pools under the name **SOPREMA**POOL

+ New formulation: exclusive varnish in the four layers for the entire SOPREMAPOOL range, thus achieving greater durability and resistance to colour fading, chlorine, stains and microorganisms.
+ Optimal welding.
+ UV resistance.
+ Resistance against microorganisms with "Bio Shield" treatment.

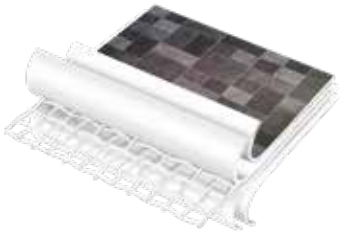

**4 LAYER MEMBRANE**

Reinforced synthetic membranes manufactured by induction with high quality raw materials (resins, plasticisers, stabilisers and pigments).

Composed of four layers with different and complementary formulations, introducing a polyester reinforcement between the second and third layers.

This reinforcement provides the membrane with great tensile strength and high dimensional stability.

# 3D membrane

Sensitive Ocean

Sensitive White

Sensitive Sand

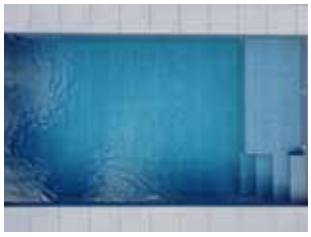

Sensitive Infinite

Sensitive Bali

+ Attractive and stylish
+ Easy and quick installation
+ Sensory experience
+ Exclusive varnish integrated in all four layers

## DESCRIPTION

PVC reinforced membrane of 1.8 mm with exclusive varnish integrated in all four layers and varnished coating for superior protection against UV rays, microorganisms and chlorine.

The 3D range replicates the feel and look of natural materials. The stylish embossed motifs add to the characteristic advantages of reinforced PVC lining: simple and quick installation and high protective and waterproofing capacity.

SOPREMAPOOL 3D has been tested for slip prevention according to the European standard EN 13451-1 (according to annex B of EN 15836-2) and DIN 51097 (1992).

- Roll of 1.65 x 25 m.

**Warranty:**

- 12 years for waterproofing.
- 3 years for stains caused by bacteria.

| | Code |
|---|---|
| **1.8 mm thickness** | |
| Sensitive White | 156988/SSHB |
| Sensitive Sand | 156988/SSSA |
| Sensitive Grey | 156988/SSGM |
| Sensitive Black | 156988/SSNB |
| Sensitive Bali | 156988/SSBA |
| Sensitive Bali Sand | 156988/SSBS |
| Sensitive Bali XL | 156988/SSXL |
| Sensitive Wood | 156988/SSWO |
| Sensitive White Wood | 156988/SSWW |
| Sensitive Sahara | 156988/SSSH |
| Sensitive Ocean | 156988/SSOC |
| Sensitive Rock | 156988/SSRK |
| Sensitive Infinite | 156988/SSIN |
| Sensitive Vanilla | 156988/SSVA |

## 3D COLOURS

Sensitive White

Sensitive Sand

Sensitive Grey

Sensitive Black

Sensitive Bali

Sensitive Bali Sand

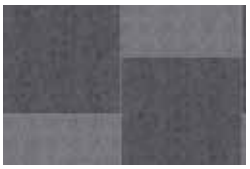

Sensitive Bali XL

Sensitive Wood

Sensitive White Wood

Sensitive Sahara

Sensitive Ocean

Sensitive Rock

Sensitive Infinite

Sensitive Vanilla

# FEELING membrane

Sand

White

Medium Grey

Basalt Grey

- **+ Easy and quick installation**
- **+ Sensory experience**
- **+ New embossing**
- **+ Exclusive varnish integrated in all four layers**

## DESCRIPTION

New SOPREMAPOOL FEELING range. Feel it through touch.

PVC reinforced membrane of 1.5 mm with exclusive varnish integrated in all four layers and standard protection against UV and microorganisms. With texture and non-slip.

SOPREMAPOOL FEELING has been tested for slip prevention according to the European standard EN 13451-1 (according to annex B of EN 15836-2) and DIN 51097 (1992).

- Roll of 1.65 × 25 m.

**Warranty:**

- 10 years for waterproofing.

| | Code |
|---|---|
| Sand | 237460/SA |
| Blue | 237460/AB |
| White | 237460/HB |
| Medium Grey | 237460/GM |
| Basalt Grey | 237460/GA |

New embossing

## COLOURS

Sand

Blue



White

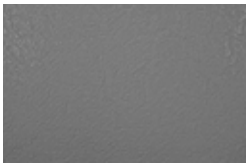

Medium Grey

Basalt Grey

Blue

# DESIGN membrane

Marbella Blue

Bali

Pearl Black

Sky Blue

Marbella Grey

+ Flexible and smooth
+ Exclusive varnish integrated in all four layers
+ Varnish coating
+ Exclusive designs

## DESCRIPTION

PVC reinforced membrane of 1.5 mm with exclusive varnish integrated in all four layers and varnished coating for superior protection against UV, microorganisms and chlorine.

Design:
- Roll of 1.65 x 25 m.

**Warranty:**
- 12 years for waterproofing.
- 3 years for stains caused by bacteria.

Grip (Anti-slip version):
- Roll of 1.65 x 10 m.

**Warranty:**
- 10 years for waterproofing.

| | Code | |
|---|---|---|
| **Premium** | | |
| Marbella Blue | 156975/MMB | |
| Marbella Black | 156975/MMBK | |
| Marbella Grey | 156975/MMG | |
| Mosaic Blue | 156975/MNB | |
| Bali | 156975/BALI | |
| Pearl Black | 156975/PB | |
| Sky Blue | 156975/SB | |
| **Grip** | | |
| Marbella Blue | 237747/MMB | New embossing |
| Bali | 237747/BALI | |

## COLOURS

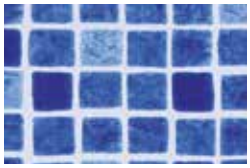

Marbella Blue

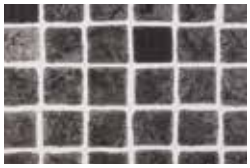

Marbella Black

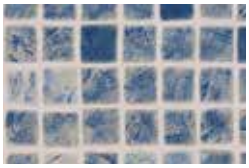

Marbella Grey

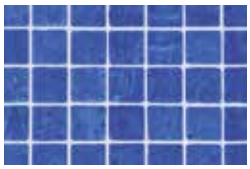

Mosaic Blue

Bali

Pearl Black

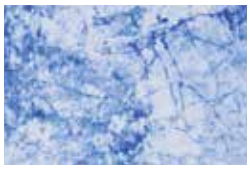

Sky Blue

WARRANTY 12 years WATERPROOFING

WARRANTY 3 years STAINS CAUSED BY BACTERIA

# PREMIUM membrane

Sand

Dark Blue

White

Medium Grey

Black

WARRANTY 12 years WATERPROOFING

WARRANTY 3 years STAINS CAUSED BY BACTERIA

- + Flexible and smooth
- + Exclusive varnish integrated in all four layers
- + Varnish coating
- + Intense and multiple colours

## DESCRIPTION

PVC reinforced membrane of 1.5 mm with exclusive varnish integrated in all four layers and varnished coating for superior protection against UV, microorganisms and chlorine.

Premium:
- Roll of 1.65 x 25 m.

**Warranty:**
- 12 years for waterproofing.
- 3 years for stains caused by bacteria.

Grip (Anti-slip version):
- Roll of 1.65 x 10 m.

**Warranty:**
- 10 years for waterproofing.

| | Code |
|---|---|
| **Premium** | |
| Light Blue | 156967/CA |
| Blue | 156967/AB |
| Dark Blue | 156967/DB |
| White | 156967/HB |
| Sand | 156967/SA |
| Light Grey | 156967/GC |
| Medium Grey | 156967/GM |
| Basalt Grey | 156967/GA |
| Black | 156967/NB |
| Wild Musk | 156967/VM |
| **Grip** | |
| Light Blue | 237747/CA |
| Blue | 237747/AB |
| White | 237747/HB |
| Sand | 237747/SA |
| Light Grey | 237747/GC |
| Medium Grey | 237747/GM |
| Basalt Grey | 237747/GA |
| Black | 237747/NB |

New embossing

## COLOURS

Light Blue

Blue

Dark Blue



White

Sand

Light Grey

Medium Grey

Basalt Grey

Black

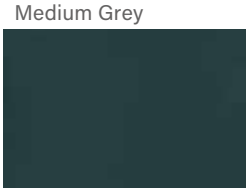

Wild Musk

# ONE membrane

+ Flexible and smooth
+ Exclusive varnish integrated in all four layers
+ Intense and multiple colours

Natural Green

Basalt Grey

Caribbean Green

Light Blue

Sapphire Blue

## DESCRIPTION

PVC reinforced membrane of 1.5 mm with exclusive varnish integrated in all four layers and standard protection against UV and microorganisms.

One:
- Roll of 1.65 x 25 m.

**Warranty:**
- 10 years for waterproofing.

Grip (Anti-slip version):
- Roll of 1.65 x 10 m.

**Warranty:**
- 10 years for waterproofing.

| | Code |
|---|---|
| **One** | |
| Light Blue | 156966/CA |
| Blue | 156966/AB |
| Sapphire Blue | 156966/BS |
| Caribbean Green | 156966/VC |
| Natural Green | 156966/VG |
| White | 156966/HB |
| Sand | 156966/SA |
| Light Grey | 156966/GC |
| Medium Grey | 156966/GM |
| Basalt Grey | 156966/GA |
| **Grip** | |
| Light Blue | 237747/CA |
| Blue | 237747/AB |
| Sapphire Blue | 237747/BS |
| Caribbean Green | 237747/VC |
| Natural Green | 237747/VG |
| White | 237747/HB |
| Sand | 237747/SA |
| Light Grey | 237747/GC |
| Medium Grey | 237747/GM |
| Basalt Grey | 237747/GA |

New embossing

## COLOURS

Light Blue

Blue

Sapphire Blue

Caribbean Green

Natural Green



White

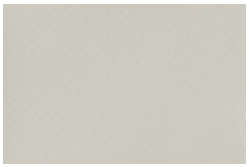

Sand

Light Grey

Medium Grey

Basalt Grey

# Liquid PVC

## for SOPREMAPOOL 3D / Feeling / Premium / Design / One membranes

### DESCRIPTION

Sealing of joints with liquid PVC for a better aesthetic appearance of the welds and a total impermeability of the system.

Content: 1 L.

| | Code | | Code |
|---|---|---|---|
| Sensitive Sahara | 156992/SSSH | Caribbean Green | 156992/VC |
| Sensitive Ocean | 156992/SSOC | Natural Green | 156992/VG |
| Sensitive Infinite + Rock | 156992/INRK | Wild Musk | 156992/VM |
| Sensitive Vanilla | 156992/SSVA | White:<br>To be applied on colours/designs<br>White, Marbella, Mosaic Blue, Sky Blue, Sensitive White and Sensitive White Wood. | 156992/HB |
| Sensitive Sand | 156992/SSSA | Light Grey | 156992/GC |
| Sensitive Bali Sand | 156992/SDBA | Medium Grey:<br>To be applied on colours/designs<br>Medium Grey, Bali, Sensitive Bali and Sensitive Bali. XL. | 156992/GM |
| Sensitive Wood | 156992/WO | Basalt Grey:<br>To be applied on colours/designs<br>Basalt Grey and Sensitive Grey. | 156992/GA |
| Light Blue | 156992/CA | Black:<br>To be applied on colours/designs<br>Black, Sensitive Black and Pearl Black. | 156992/NB |
| Azure Blue | 156992/AB | Sand | 156992/SA |
| Sapphire Blue | 156992/BS | Transparent | 156992/FTA |
| Dark Blue | 156992/DB | | |

# Alsan Bond Pool SP

## Sprayable adhesive

### DESCRIPTION

Alsan Bond POOL SP is a fast-drying sprayable solvent-based adhesive for bonding the geotextile to the pool support prior to liner installation. It is suitable for indoor and outdoor applications.

- Content: 500 ml.
- Box with 12 units.

| Code |
|---|
| 73526 |

# Alsan Bond Pool 410

## Cold contact glue

### DESCRIPTION

Cold contact glue for single and double gluing the reinforced membrane to the pool structure at specific points.

- Content: 5 L.

| Code |
|---|
| 159005 |

# Geoland HT 300

## Geotextile

### DESCRIPTION

100% polypropylene fiber non-woven geotextile, needlepunched mechanically by means of needles with subsequent heat treatment and calendering.

The Geoland HT geotextile is mainly used as a protective and separating layer between the pool basin and the SOPREMAPOOL reinforced membrane.

- 300 g/m$^2$.
- Roll of 65 m x 2.2 m.

| Code |
|---|
| 103471 |

# Welding strip

### DESCRIPTION

Welding strip to install Sopremapool 3D membranes (edge-to-edge installation).

- Dimensions: 25 m x 0.15 m.

| Code |
|---|
| 157622 |

# PVC cord

### DESCRIPTION

Cord to weld the edge of the reinforced membrane to attach it to the profile.

- Content: Pack of 5 units
- Dimensions: 25 m x 9 mm (every unit).

| Code |
|---|
| 158498 |

# PVC marking strip

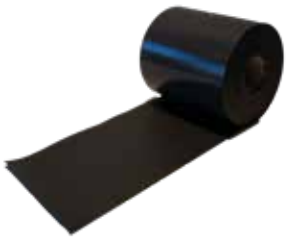

### DESCRIPTION

Strip for the separation of the swimming lanes.

- Dimensions: 25 m x 0.25 m.

| Code |
|---|
| 107028 |

RENOLIT ALKORPLAN

RENOLIT ALKORPLAN

# RENOLIT ALKORPLAN TOUCH (3D)

## Reinforced membrane

ESPESOR 2 mm

SLIP RESISTANCE Category C

## DESCRIPTION

TOUCH is the new reinforced membrane ALKORPLAN 2 mm thick. It is the strongest and most resistant on the market and has a natural finish. TOUCH Membranes have exclusive prints and a 3D embossing that makes them unique, tactile, and visually exciting.

| | Code |
|---|---|
| **TOUCH 1.65 x 21 m** | |
| Elegance | 74436 |
| Relax | 58533 |
| Authentic | 58534 |
| Vanity | 67968 |
| Sublime | 67969 |
| Prestige | 67970 |
| Origin | 74180 |

## COLOURS

Elegance

Relax

Authentic

Vanity

Sublime

Prestige

Origin

Elegance

Relax

Authentic

Vanity

Sublime

Prestige

Origin

RENOLIT ALKORPLAN

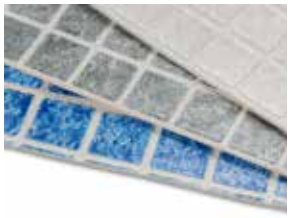

ESPESOR 2 mm

SLIP RESISTANCE Category C

RENOLIT ALKORPLAN 200/100 REINFORCED LINER

# RENOLIT ALKORPLAN CERAMICS

## Reinforced membrane

### DESCRIPTION

ALKORPLAN CERAMICS is a reinforced 2-mm embossed membrane for pools that imitates the volume of real glass tiling and its joints to look like a mosaic inspired in Greek mythology.

- Watertightness guaranteed.
- Quick to fit in comparison with glass tiling.
- The ceramic pieces on ALKORPLAN CERAMICS do not fall off.
- Minimum maintenance.
- More resistant and long-lasting thanks to its 2-mm thickness.
- Embossed coating that makes it look like real glass tiling.

| | Code |
|---|---|
| **1.65 x 21 m** | |
| Atenea | 70673 |
| Selene | 70674 |
| Etna | 70676 |

### COLOURS

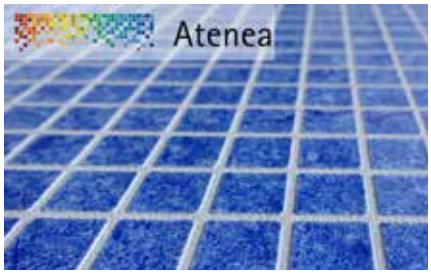

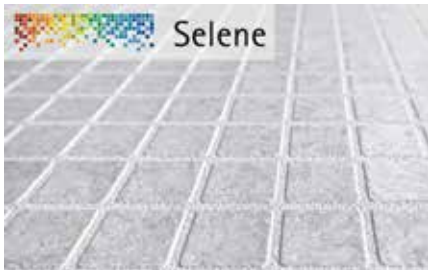

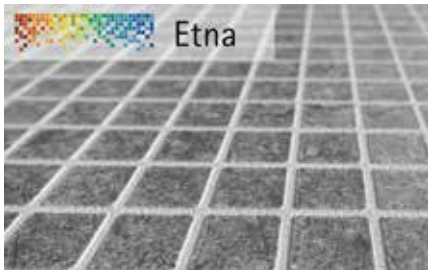

RENOLIT ALKORPLAN 150/100 REINFORCED LINER

# RENOLIT ALKORPLAN2000

## Reinforced membrane

## DESCRIPTION

High quality membranes coated with a lacquer that gives them great UV stability, resistance to aging and weathering, and with the addition of fungicides and bactericides to prevent bacterial growth that make it rot-proof.

| | Code |
|---|---|
| **1.65 x 25 m** | |
| Light Blue | 49908 |
| Adriatic Blue | 49909 |
| White | 49911 |
| Sand | 49912 |
| Light Grey | 49913 |
| Dark Grey | 49914 |
| Caribbean Green | 49910 |
| Black | 35216249F |
| **2.05 x 25 m** | |
| Light Blue | 49908-205 |
| Adriatic Blue | 49909-205 |
| White | 49911-205 |
| Sand | 49912-205 |
| Light Grey | 49913-205 |
| Dark Grey | 49914-205 |
| Caribbean Green | 49910-205 |

## COLOURS

Light Blue

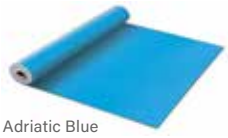
Adriatic Blue

White

Caribbean Green

Sand

Light Grey

Dark Grey

Black

RENOLIT ALKORPLAN

RENOLIT ALKORPLAN 150/100 REINFORCED LINER

# RENOLIT ALKORPLAN RELIEF

## Reinforced membrane

SLIP RESISTANCE Category C

SLIP RESISTANCE Category 3

THICKNESS 1,8 mm

### DESCRIPTION ANTISLIP

RENOLIT launches the best multipurpose anti-slip sheet on the market with Class 3 CTE. In addition to having a finish that is more pleasant to the touch and to the eye, its new 25 m format and its 1.8mm thickness, It allows covering entire pools, making them more modern and attractive, and achieving invisible welds if installed by butt welding.

| | Code |
|---|---|
| **Anti-slip - 1.65 x 25 m** | |
| Light Blue | 75448 |
| Adriatic Blue | 75447 |
| Caribbean Green | - |
| White | 75446 |
| Sand | 75449 |
| Light Grey | 75450 |
| Dark Grey | 75451 |
| Black | 81116708F |

### COLOURS

White

Sand

Light Grey

Light Blue

Adriatic Blue

Caribbean Green

Dark Grey

Black

# RENOLIT ALKORPLAN TILE

## Reinforced membrane

Quartz (grey)

Jade (green)

ESPESOR 2 mm

SLIP RESISTANCE Category C

### DESCRIPTION ANTISLIP

The new RENOLIT ALKORPLAN Tile Collection is the ultimate expression of the elegance because combines perfectly the design and the functionality. Made with 2mm thickness gives to the reinforced membrane a great flexibility and easiest way to install. This new range of products came with 2 different textures: Jade or Quartz, both inspired in the nature but that brings you to the urban environment or to exclusiveness.

| | Code |
|---|---|
| **1.65 x 21 m** | |
| Quartz (grey) | 35917101F |
| Jade (green) | 35917102F |

RENOLIT ALKORPLAN 150/100 REINFORCED LINER

# RENOLIT ALKORPLAN3000

## Reinforced membrane

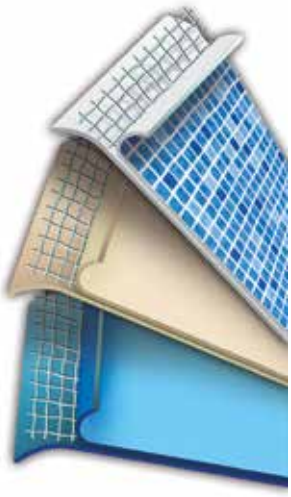

### DESCRIPTION

All RENOLIT ALKORPLAN3000 membranes are protected by a super resistant multi-layer of lacquer that extends the life of the membrane and prevents premature aging.
High quality membrane printed with exclusive designs, coated with a special protective multi-layer lacquer that protects against:.

- Abrasion or scratching caused during use.
- Appearance of algae and bacteria.
- Protection from UV rays.

| | Code |
|---|---|
| **1.65 x 25 m** | |
| Byzanz Blue | 49916 |
| Carrara | 49919 |
| Marble | 49920 |
| Blue Persia | 49921 |
| Sand Persia | 49907 |

### COLOURS

Byzanz Blue

Carrara

Marble

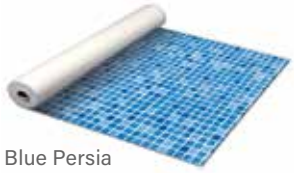
Blue Persia

Sand Persia

RENOLIT ALKORPLAN
**NATURAL POOL**

# RENOLIT ALKORPLAN NATURAL POOL

Olive green

Dark Grey

Black

### DESCRIPTION

RENOLIT ALKORPLAN NATURAL POOL is a more environmentally-friendly product than those currently on the market. Its new formulation means the membrane can be used in the presence of fish and plants. Waterproofing membrane of flexible polyvinyl chloride (PVC-P) with a polyester reinforcing. Designed for natural swimming pools and small swimming ponds for private use.

- More environmentally-friendly product
- No bactericides
- No fungicides

| | Code |
|---|---|
| **2.05 m x 20 m** | |
| Olive green | 73015 |
| Dark grey | 73017 |
| Black | 73019 |

RENOLIT ALKORPLAN

Vintage

Urban

Summer

Tropical

ESPESOR 2 mm

SLIP RESISTANCE Category C

RENOLIT ALKORPLAN 150/100 REINFORCED LINER

# RENOLIT ALKORPLAN VOGUE

## Reinforced membrane

### DESCRIPTION

2mm premium membranes, with the same technology and quality as the Touch range but inspired by current interior and exterior decoration trends. Avant-garde designs that aim to respond to an audience that wants a unique, exclusive design pool with personality.

VOGUE is the new ALKORPLAN reinforced membrane with 2 mm thick. It is the strongest and most resistant on the market and its designs transform pools into true design objects. Inspiration comes from refined, modern and aesthetically avant-garde finishes to create dream pools.

| | Code |
|---|---|
| **1.65 m x 21 m** | |
| Vintage | 74975 |
| Urban | 74976 |
| Summer | 74977 |
| Tropical | 35717418F |

RENOLIT ALKORPLAN

# ALKORPLUS Seam sealer

## for the RENOLIT ALKORPLAN 2000 and 3000 ranges

### DESCRIPTION

Liquid PVC ALKORPLUS for sealing joints (1 litre tins/pack of 6 tins).

| | Code |
|---|---|
| Light Grey | 23600 |
| Dark Grey | 52619 |
| Caribbean Green | 52620 |
| White | 52622 |
| Transparent | 52623 |
| Light Blue | 52624 |
| Adriatic Blue | 12284 |
| Sand | 52626 |

# ALKORPLUS VOGUE Seam sealer

Liquid PVC specifically for finishing the membrane welds of the RENOLIT AlkorPlan VOGUE. Necessary for overlap and butt welds. The color and texture are designed to match the RENOLIT AlkorPlan VOGUE membranes and its improved formulation gives it a permanent resistance to fading.

| | Code |
|---|---|
| Vintage | 75905 |
| Urban | 75909 |
| Summer | 75910 |
| Tropical | 81020004F |

# ALKORPLUS TOUCH Seam sealer

### DESCRIPTION

Specifically for fitting ALKORPLAN TOUCH membranes. Made using an innovative formulations that makes it more resistant to ageing and fading, thus prolonging the pool's service life and its perfect appearance by many years.

| | Code |
|---|---|
| Elegance | 60613 |
| Relax | 60614 |
| Authentic | 60615 |
| Vanity | 67971 |
| Sublime | 67972 |
| Prestige | 67973 |
| Origin | 74181 |

# ALKORPLUS TILE Seam sealer

### DESCRIPTION

Specific for fitting ALKORPLAN TILE membranes. The color and texture has been designed to match the RENOLIT ALKORPLAN TILE membranes.

| | Code |
|---|---|
| **1.65 x 21 m** | |
| Quartz (grey) | 81021002F |
| Jade (green) | 81021003F |

RENOLIT ALKORPLAN LINER ACCESSORIES

# ALKORPLAN CERAMICS

## Seam sealer

### DESCRIPTION

Liquid PVC ALKORPLAN CERAMICS for finished welds (900 g tins/pack of 6 tins).

| | Code |
|---|---|
| White | 70678 |

# ALKORPLAN Lane Marker

### DESCRIPTION

Black foil band for marking the streets in public and competition swimming pools. This black membrane and now, with more protection lacquer, offers greater resistance to whitening, designed for the harsh conditions of chemical treatment that usually occur in public pools..

| | Code |
|---|---|
| Rail Bands (25 m x 0.25 m). Black colour | 50798-150 |

# ALKORPLAN geotextile fungicide

### DESCRIPTION

Felt made up of 400 g/m² light blue heat-welded polypropylene fibres treated with metal ion anti-bacterial organic additives to act as a stable fungicide. It is used as a protective layer between the ALKORPLAN membrane and the pool surface to prevent the proliferations of bacteria, fungi and micro-organisms, as well as imitating the irregular embossed surfaces that the pool may have had before fitting the liner. Bathers also find the bottom of the pool much more pleasant when they walk on the membrane. Length: 50 m. Light blue colour.

| | Code |
|---|---|
| Width 1.50 m. For butt welding | 69179 |
| Width 1.65 m | 66381 |
| Width 2.00 m | 66382 |

# Band for Testa installation

### DESCRIPTION

Band to install the membrane RENOLIT ALKORPLAN TOUCH to testa, which is recommended to be done on swimming pool floors for a much more impeccable visual finish. Its use is indicated together with the geotextile felt (400g) in floors to avoid visible mounds appear next to the joints and welds..

| | Code |
|---|---|
| Butt welding band. Dark grey colour (1.5mm thickness x 15cm width x 20m length) | 68828 |

RENOLIT ALKORPLAN

# Skimmer Adaptor

## DESCRIPTION

The skimmer adaptor replaces the need to remove the previous skimmer, as it is inserted into the previous skimmer and sealed using ABS glue or marine silicone. It is only suitable for skimmers with an internal opening of 140 mm x 201 mm

| | Code | Standard Pack | Standard weight in kg | Standard volume in m³ |
|---|---|---|---|---|
| | 55977 | 1 | 1.3 | 0,02 |

# Wall inlet "R" / Vacum Point "R"

## DESCRIPTION

RENOLIT's R nozzles are designed to minimize 90% of engineering work required to replace the old concrete or fibre nozzle. Only for 50 mm pipes ready to 10 ATM.

| | Code | Standard Pack | Standard weight in kg | Standard volume in m³ |
|---|---|---|---|---|
| Vacum Point "R" | 81210008 | - | - | - |
| Wall inlet "R" | 81210007 | - | - | - |

**For more pool shell elements dediecated to liner pools, see chapter pool shell equipment.**

# PVC profile PVC RENOLIT ALKORPLUS

## DESCRIPTION

PVC profile for fixing the reinforced membrane to the pool wall or under the coping stone.
Easily adaptable to any shape of the pool, just by applying a little heat. Completely insensitive to humidity, corrosion and chlorine..

| | Code |
|---|---|
| PVC laminate<br>PVC profile (2 mm thickness x 5 cm width x 2 m lenght) | 81170122 |
| 90º angle PVC profile (2 mm thickness x 5x5 cm width x 2 m lenght) | 81170142 |

# PVC laminated

## DESCRIPTION

Particularly suitable for fixing reinforced membrane in existing pools for renovation or for pools. where the horizontal surfaces are uneven or have irregularities.

| | Code |
|---|---|
| PVC laminate<br>(1.4mm thickness x 5cm width x 2m length) | 58942 |

# PVC laminated 90º angle profile

## DESCRIPTION

A Fixing with a 90° angle, suitable for new pools where the coping has not been fixed or for renovations where the crown can be removed and its upper surface of the pool structure is completely smooth.

| | Code |
|---|---|
| Laminate 90° angle profile<br>(1.4mm thickness x 4.5x4.5cm width x 2m length) | 58944FE |

# Laminate

## DESCRIPTION

Ideal for pools with irregular shapes where the installer can design their own profiles with the angle and size required.

| | Code |
|---|---|
| Laminate<br>(1.4mm thickness, 1cm width x 2m length) | 56307 |

RENOLIT ALKORPLAN

# Bead receiver track

74762

74982

## DESCRIPTION

50mm white PVC or aluminium profile in piece of 2 m. Suitable for both new pools and renovations, with the possibility of adapting to straight sections as well as curved sections.

| | Code |
|---|---|
| PVC profile (5cm width x 2m length) | 74762 |
| Aluminium profile (5cm width x 2m length) | 74982 |

# 6 mm Locking bead

## DESCRIPTION

Beading to lock the reinforced membrane anchorage when the hung system is used. It also has an aesthetic finishing function.

| | Code |
|---|---|
| Locking bead. White colour (6 mm width x 50m lenght) | 8GAYLLOW |

# Rivets

## DESCRIPTION

Aluminium rivets.

| | Code | Standard Pack | Standard weight in kg | Standard volume in $m^3$ |
|---|---|---|---|---|
| 25 x 4.8 mm | 53795 | 3 | 8.0 | 0.01 |

RENOLIT LINER ACCESSORIES

# ALKORCLEAN waterline

## degreaser and ALKORPLUS stain remover

### DESCRIPTION

The ALKORCLEAN degreaser is recommended for removing grease from the waterline, while the ALKORPLUS stain remover neutralises metal ions in the water such as copper.

The ALKORPLUS stain remover is a liquid to prevent stains by preventing dirt forming on the waterline.

| | Code |
|---|---|
| ALKORCLEAN waterline degreaser | 55976 |
| Alkorplus stain remover | 53898 |

# RENOLIT ALKORPLUS

## Structure Disinfectant

### DESCRIPTION

An effective product for cleaning and disinfecting the structure prior to installing the lining, preventing the proliferation of microorganisms between the ground and the liner and, therefore, the appearance of irreversible stains. Transparent.

| | Code | Standard Pack |
|---|---|---|
| Pool Shell Disinfectant. 1L Transparent | 53890 | 6 |

# RENOLIT ALKORPLUS THF Solvent

### DESCRIPTION

THF (Tetrahydrofuran) is a solvent normally used to reduce the viscosity of liquid PVC or sealing lacquer. These products leave the factory with the correct viscosity, but since they are manufactured using volatile solvents, over time their viscosity increases. To reduce it, a small quantity if THF is added in the polyethylene bottle that the sealant contains. It can also be used as a PVC accessory cleaner (tubes, piping, etc.), before the application of the specific PVC glue.

| | Code | Standard Pack |
|---|---|---|
| THF solvent. 1L Transparent | 64312 | 6 |

# RENOLIT ALKORPLUS MEC Solvent

### DESCRIPTION

MEC (Methyl ethyl ketone or Butanone) is a solvent used commonly to reduce the viscosity of sealants manufactured with the same MEK solvent. These products leave the factory with the correct viscosity, but as they are manufactured based on volatile solvents, their viscosity increases over time. To reduce it, add a small amount of MEK to the polyethylene bottle containing the sealant. This product is suitable for 81022 (XTREME), 81023 (TOUCH) and 81024 sealants.

| | Code | Standard Pack |
|---|---|---|
| MEC solvent. 1L Transparent | 74450 | 6 |

# RENOLIT ALKORGLUE

## Neoprene-based contact glue

### DESCRIPTION

The RENOLIT ALKORGLUE 81045 glue is a neoprene based contact adhesive. It is toluene-free and environmentally friendly. It will form a prefect bond between ALKORPLAN pool liner membrane, and geotextile 81006 to metal, wood, rigid PVC, concrete and other surfaces. It is not suitable for use in contact with expanded polyestyrene.

| | Code | Standard Pack |
|---|---|---|
| 5 L Yellowish colour | 70679 | 1 |
| 20 L Yellowish colour | 74981 | 1 |

# RENOLIT ALKORGLUE Zero solvents

### DESCRIPTION

Multipurpose glue free of organic solvents suitable for not damaging sensitive materials like geotextile fleece or polystyrene. Thanks to being in an aqueous suspension, it can be used as a wet, semi-wet or contact glue. It is non-flammable.

| | Code | Standard Pack |
|---|---|---|
| 20 L Beige colour | 74465 | 1 |

# RENOLIT ALKORGLUE

## Nitrile Rubber based thermo-adhesive

### DESCRIPTION

RENOLIT ALKORGLUE is a toluene-free, Nitrile Rubber based glue. The volatile solvent make is quick-drying and it has high resistance to water, ageing and plasticisers. These factors make it especially suitable for mounting the membrane on cement and mortar, and on stairs and corners even when damp. It has the added advantage of being reactivated by a hot-air welder, for those occasions when the membrane has been left open for long periods.

| | Code | Standard Pack |
|---|---|---|
| Quick-drying glue. 20 L Beige colour | 53891 | 1 |



# Joint Sealant Application Bottle

### DESCRIPTION

Kit joint sealant application bottle + dosing cap (5 bottles with normal cap + 20 dosing caps).

| | Code | Standard Pack |
|---|---|---|
| Joint Sealant | 81445001F | 1 |

# EASYCOLOR Inlet Sheath

- This kit of inlet sheath allows to change the color, both the embellisher and the floater.
- This sheath could be installed without changing the skimmer mouth what is very practical to renew or upgrade pools.
- This kit includes inlet sheath, floater, flanges and embellisher.

73166CL090

73166CL129

73166CL144

## DESCRIPTION

Compatible with skimmer items 30866, 30867, 73158, 73159, 73160 , 73161, 73162 and 73163.

| | Code | Standard Pack | Standard weight in kg | Standard volume in m³ |
|---|---|---|---|---|
| Beige - inlet sheath | 73166CL090 | 1 | 1.22 | 0.02 |
| Light grey - inlet sheath | 73166CL129 | 1 | 1.22 | 0.02 |
| Anthracite grey - inlet sheath | 73166CL144 | 1 | 1.22 | 0.02 |

74035CL090

74035CL129

74035CL1144

## DESCRIPTION

Compatible with skimmer items 00251, 00252, 01463, 01464, 11304, 11305, 11311, 11313, 11314 and 11317.

| | Code | Standard Pack | Standard weight in kg | Standard volume in m³ |
|---|---|---|---|---|
| Beige - inlet sheath | 74035CL090 | 1 | 1.22 | 0.022 |
| Light grey - inlet sheath | 74035CL129 | 1 | 1.22 | 0.022 |
| Anthracite grey - inlet sheath | 74035CL144 | 1 | 1.22 | 0.022 |

# Main drain grille

## for pool standard compliance

74097

74097CL090

74097CL129

74097CL144

Complies with Standards EN 16582-1

Complies with Apt.4.4.1 b.2 of EN 16713-2:2017

## DESCRIPTION

Grille to replace the grilles on already installed main drains in private pools, to meet pool regulations. Made of PP plastic. Compatible with main drains 01467, 27837, 27839.

| | Code | Standard Pack | Standard weight in kg | Standard volume in m³ |
|---|---|---|---|---|
| **Grille** | | | | |
| White | 74097 | 6 | 3 | 0.033 |
| Beige | 74097CL090 | 6 | 3 | 0.033 |
| Light grey | 74097CL129 | 6 | 3 | 0.033 |
| Anthracite grey | 74097CL144 | 6 | 3 | 0.033 |

POOL SHELL ACCESSORIES SPECIAL FOR LINER POOL RENOVATION

# Multiflow threaded return

## inlet for liner pools

Complies with Standards
EN 16582-1
EN 16713-2

### DESCRIPTION

Outer 2" thread, Ø 50mm inner. For liner pools. Comes in ABS, with gaskets and screws. Installation with bushing 15662 or 15663 is recommended (see page 152).

| | Code | Standard Pack | Standard weight in kg | Standard volume in m³ |
|---|---|---|---|---|
| White | 00330 | 12 | 4.5 | 0.020 |
| Beige | 00330CL090 | 12 | 4.5 | 0.020 |
| Light Grey | 00330CL129 | 12 | 4.5 | 0.020 |
| Anthracite Grey | 00330CL144 | 12 | 4.5 | 0.020 |

# Suction nozzle for liner pools

Complies with Standards
EN 16582-1
EN 16713-2

### DESCRIPTION

Outer 2" thread, internal Ø 50 mm. Made of white ABS. Comes with plug, gaskets and screws. Recommended for installation with wall conduit 15663.

| | Code | Standard Pack | Standard weight in kg | Standard volume in m³ |
|---|---|---|---|---|
| **Standard return inlet** | | | | |
| White | 00332 | 12 | 4.22 | 0.020 |
| Beige | 00332CL090 | 12 | 4.22 | 0.020 |
| Light Grey | 00332CL129 | 12 | 4.22 | 0.020 |
| Anthracite Grey | 00332CL144 | 12 | 4.22 | 0.020 |

LINER ACCESSORIES

# 9 mm strip

### DESCRIPTION

Welded to the edge of the liner, allows the liner to attach to the pool shell, by using the corresponding profile.

| | Code | Standard Pack | Standard weight in kg | Standard volume in m³ |
|---|---|---|---|---|
| | 12184 | 250 m | 9.0 | 0.036 |

CLASSIFICATION OF LINERS DEPENDING ON THE POOL

# Pool liners 75/100°

| | Standard pool liners 75/100° | Non-Standard pool liners 75/100° |
|---|---|---|
| **Solid colour models** | **Code** | **Code** |
| Light blue | 09278 | 05810 |
| France blue | 09277 | 05809 |
| Caribbean green | 09281 | 05813 |
| White | 09279 | 05811 |
| Sand | 16131 | 16137 |
| **Printed colour models** | **Code** | **Code** |
| Servanne | 26668 | 26686 |
| Mosaic | 09280 | 05812 |
| Blue marble | 16132 | 16138 |
| Green marble | 16132V | 16138V |
| Sand marble | 16132A | 16138A |
| Byzantium blue | 26669 | 26678 |
| Byzantium green | 26670 | 26679 |

**Consult us for pools of different designs and shapes**

## COLOURS


Light Blue

France blue

Caribbean Green


Sand


White

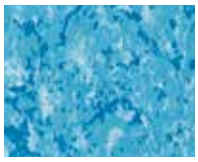
Servanne

Mosaic

Blue Marble

Green Marble


Sand Marble

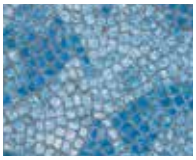
Byzantium blue

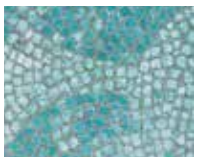
Byzantium green

## STANDARD POOLS

| Rectangular | Round | Oval | Ovoid shaped |
|---|---|---|---|

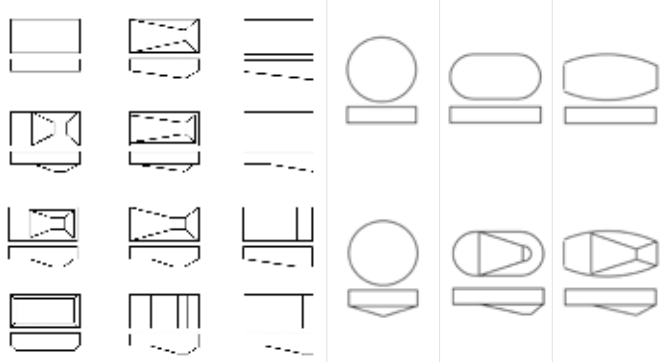

## NON STANDARD POOLS

| Kidney | Lazy | Polygonal | Parallelogram | Trapezium |
|---|---|---|---|---|

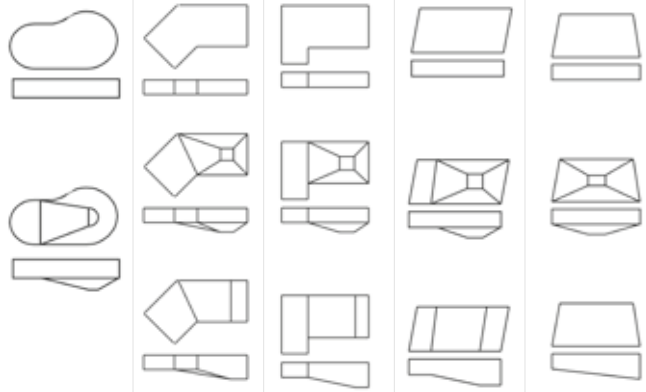

Until end of stocks.

- **Below we provide you with the details of the shapes and models you can choose from plain or printed liners to ensure you select the correct liner for your pool steps.**
- **Steps that are fitted along the breadth of the basin are invoiced in accordance with the standard model STRAIGHT as long as the width does not exceed 4 meters.**
- **Attention: the size of the basin should not include the depth of the steps.**

## STANDARD STEPS

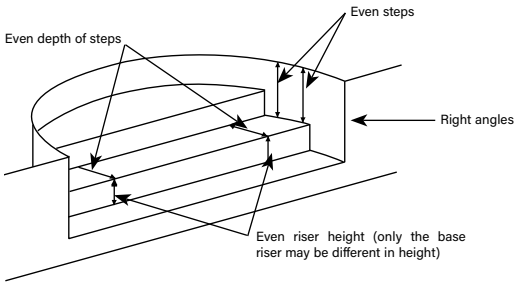


## NON STANDARD STEPS

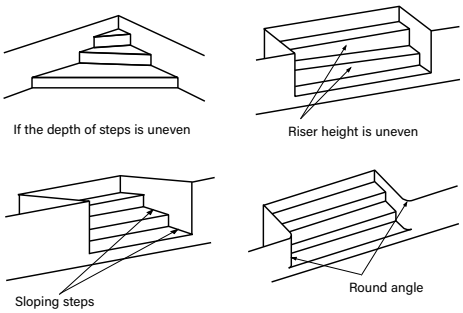


**For steps that do not fit the Standard models shown here, request quote.**

## PLAIN LINERS FOR STAIRS

| Steps | | Plain Liner | Plain Liner + Bands | Diagram |
|---|---|---|---|---|
| **Shape** | **Widths** | **Code** | **Code** | |
| Straight | 0 to 2 meters | 05789 | 05789B | |
| | 3 to 4 meters | 05791 | 05791B | |
| Roman | 0 to 2 meters | 16163 | 16163B | |
| | 2 to 3 meters | 25868 | 25868B | |
| | 3 to 4 meters | 05800 | 05800B | |
| Right angle | 0 to 2 meters | 05803 | 05803B | 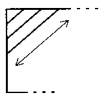 |
| | 2 to 3 meters | 05804 | 05804B | |
| ¼ Circle | 0 to 2 meters | 16167 | 16167B | 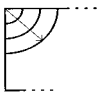 |
| | 2 to 3 meters | 089443 | 089443B | |

## PRINTED LINERS FOR STAIRS

| Steps | | Printed Liner | Printed Liner + Bands | Diagram |
|---|---|---|---|---|
| **Shape** | **Widths** | **Code** | **Code** | |
| Straight | 0 to 2 meters | 05794 | 05794B | 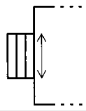 |
| | 2 to 3 meters | 05795 | 05795B | |
| | 3 to 4 meters | 05796 | 05796B | |
| Roman | 0 to 2 meters | 16169 | 16169B | 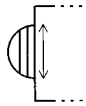 |
| | 2 to 3 meters | 05801 | 05801B | |
| | 3 to 4 meters | 05802 | 05802B | |
| Right angle | 0 to 2 meters | 05806 | 05806B | 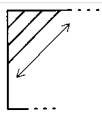 |
| | 2 to 3 meters | 05807 | 05807B | |
| ¼ Circle | 0 to 2 meters | 16173 | 16173B | 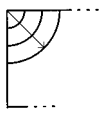 |
| | 2 to 3 meters | 089446 | 089446B | |

## CONDITIONS FOR ACCEPTING AN ORDER

**Note: The colours shown in the catalogue are approximate**

Order:

All orders or enquiries for modifying orders must be made in writing.
For avoiding any delay, the client, at his own risk, must forward the supplier all the necessary liner measurements for executing the work. In case the information supplied by the client is insufficient, he will have to supply the missing information ahead of the manufacturing time.

Implicit data:

If the following information is not supplied in writing with the order, we shall consider the below mentioned data for the liner manufacture:

* Vertical radii of 15 cm.
* Horizontal radii of a maximum of 5 cm (in the pool shell only). Hung-type fastening system.
* The horizontal measurements taken from the pool shell.
* The depth measurements taken from the lower part of the pool's coping stone to the base of the wall.
* The diagonal measurements taken of the right angles, not of the radii.

To avoid certain misunderstandings, we suggest you take the following precautions:

For holding the liner:
* Specify the type (hung, overlap or V-fasteners); we anticipate that an additional 15 cm of material will be required for the walls if the overlap fastening system is used.

For steps:
* Check whether the angles between the step tread and rise (flat and vertical step surfaces) are truly rectilinear.
* Installation of a discharge nozzle in the middle of the first step is highly recommended for holding the liner in place.
* At least 30 cm of water should be left in the pool for maintaining the first step.
* Avoid designing staircases having more than 5 steps.
* To confirm dimensions, give the lengths of each step.
* Check the verticality of pool walls. In case of deficient plumbness, enquire about the order viability.
* Compound inclination safety ledges should be avoided on the liner.

Taking measurements:

Provide the total lengths and widths.
* All heights of the pool shell.
* Width of the safety step on each side.
* Specify the peripheral size of each side.
* Provide the measurements of each corner and slope.
* All dimensions should be provided with horizontal and/or vertical measurements.

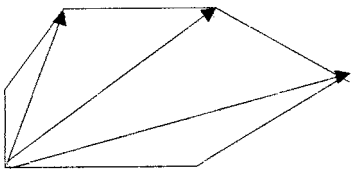

If angles are not straight:

* Measure all of the diagonals from a single point.
* The diagonals of the right angles are only required for irregular shaped pools without right angles.

Calculation of arcs of circles:

* The arcs of circles are calculated by their radius.
* If the radius has not been calculated, a template must be used or the triangulation must be calculated to specify it.
* Ellipses are calculated using templates (or a grid plan made at intervals of approximately 1 m).

Sectional views:

* Three views are recommended: a top view, a front view and a side view.

Templates:

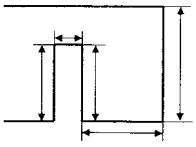

* Make templates for the sky and water sides (or one view).
* Templates are made for the pool's shell or cover.

Shuttering:

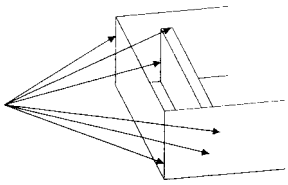

* Specify the measurements of the shuttering as shown in the diagram.
* Check that the inside vertical angles of the shutterings are straight.
* Check that vertical pool shell angles shuttering are in a straight line.
* Check that the horizontal angle of the wall and shuttering are in a straight line.

GLASS TILING FOR POOLS

# 5 x 5

UNNION POLYURETHANE SYSTEM

| | Code |
|---|---|
| **31 x 31 cm / 13.15" x 13.15"** | |
| Niebla azul | NIAZ50Y NIEBLA |
| Niebla fuerte | NIFU50Y NIEBLA |
| Niebla piscina | NIPI50Y NIEBLA |
| Niebla menta | NIME50Y NIEBLA |
| Blanco | BNCO50Y LISO |
| 503 | 050350Y NIEBLA |

NIEBLA AZUL

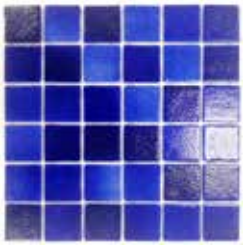

NIEBLA FUERTE

NIEBLA PISCINA

NIEBLA MENTA



BLANCO

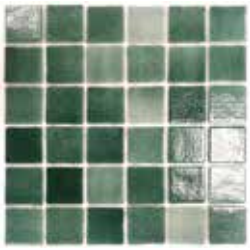

503

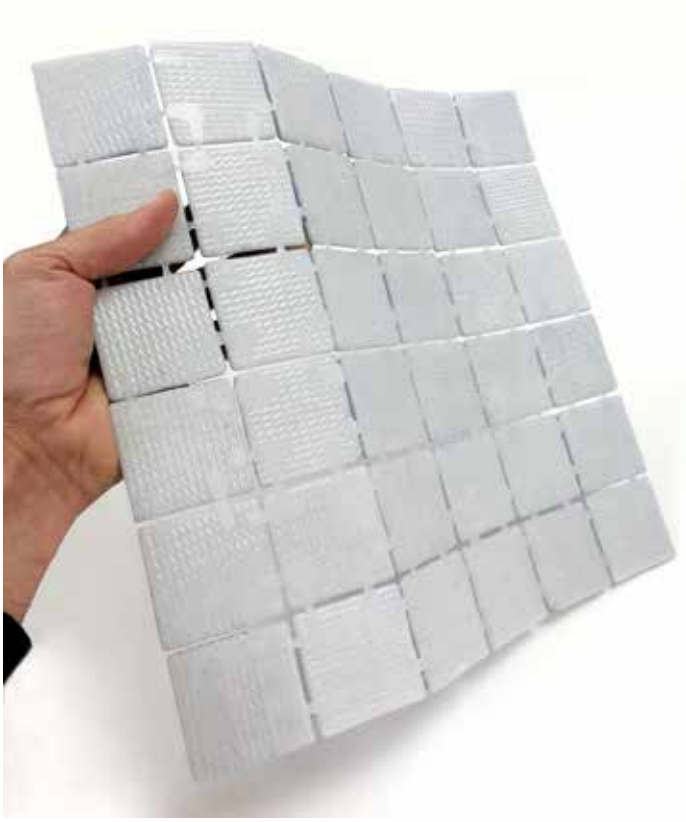

**Does not invade the joints**

**Resistance**

**Flexibility**

**Excellent Grip**

**Durability**

**Easy intallation**

GLASS TILING FOR POOLS

# 5 x 5

5X5 UNNION POLYURETHANE SYSTEM

| | Code |
|---|---|
| **31 x 31 cm / 13.15" x 13.15"** | |
| Niebla Tikal | NIVT50Y NIEBLA |
| Niebla Koh Pai | NIKO50Y NIEBLA |
| Niebla Bacan | NIBA50Y NIEBLA |
| Niebla Java | NIJA50Y NIEBLA |
| G326 | G32650Y NIEBLA GLOSSY |
| G340 | G34050Y NIEBLA GLOSSY |
| G341 | G34150Y NIEBLA GLOSSY |
| G342 | G34250Y NIEBLA GLOSSY |
| Niebla Tikal Silk | NIVT50AY NIEBLA ANTIDESLIZANTE |
| Niebla Koh Pai Silk | NIKO50AY NIEBLA ANTIDESLIZANTE |
| Niebla Bacan Silk | NIBA50AY NIEBLA ANTIDESLIZANTE |
| Niebla Java Silk | NIJA50AY NIEBLA ANTIDESLIZANTE |
| Chukum Silk | CHUK50AY NIEBLA ANTIDESLIZANTE |
| Batur Silk | BATU50AY NIEBLA ANTIDESLIZANTE |

Niebla Tikal

G326

Niebla Tikal Silk

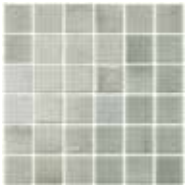
Niebla Koh Pai

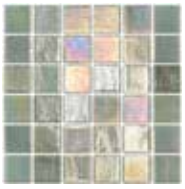
G340

Niebla Koh Pai Silk

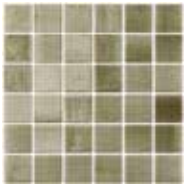
Niebla Bacan

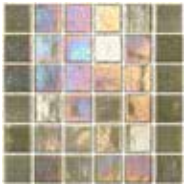
G341

Niebla Bacan Silk

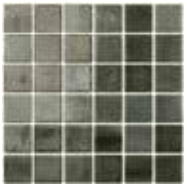
Niebla Java

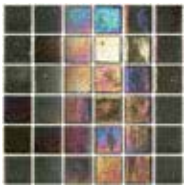
G342

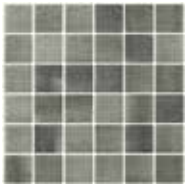
Niebla Java Silk

Chukum Silk

Batur Silk

# Pearl

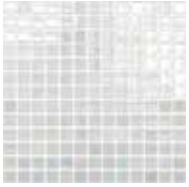
Mod. 1 - 54160

Mod. 2 - 57371

Mod. 3 - 62312

Mod. 4 - 67497

Mod. 5 - 67498

| | Code |
|---|---|
| Pearl model 1 | 54160 |
| Pearl model 2 | 57371 |
| Pearl model 3 | 62312 |
| Pearl model 4 | 67497 |
| Pearl model 5 | 67498 |

54160

# Blue mix

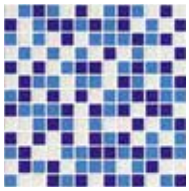
Mod. 1 - 54357

Mod. 2 - 61291

Mod. 3 - 54417

Mod. 4 - 54372

| | Code |
|---|---|
| Blue mix model 1 | 54357 |
| Blue mix model 2 | 61291 |
| Blue mix model 3 | 54417 |
| Blue mix model 4 | 54372 |

54372

# Lagoon effect

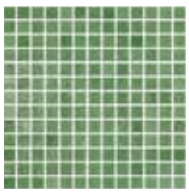
Mod. 1 - 54314

Mod. 2 - 54313

Mod. 3 - 54312

Mod. 4 - 63141

| | Code |
|---|---|
| Lagoon effect model 1 | 54314 |
| Lagoon effect model 2 | 54313 |
| Lagoon effect model 3 | 54312 |
| Lagoon effect model 4 | 63141 |

63141

# Beach effect

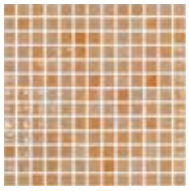
Mod. 1 - 54316

Mod. 2 - 54324

Mod. 3 - 54315

Mod. 4 - 64359
(Matt - C3)

| | Code |
|---|---|
| Beach effect model 1 | 54316 |
| Beach effect model 2 | 54324 |
| Beach effect model 3 | 54315 |
| Beach effect model 4 | 64359 |

54324

# Stone effect

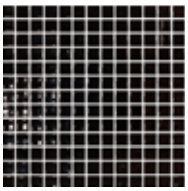
Mod. 1 - 54398

Mod. 2 - 54328

Mod. 3 - 54344

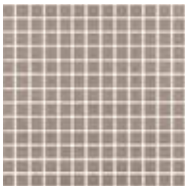
Mod. 4 - 54231
(Matt - C3)

| | Code |
|---|---|
| Stone effect model 1 | 54398 |
| Stone effect model 2 | 54328 |
| Stone effect model 3 | 54344 |
| Stone effect model 4 | 54231 |

54328

# White


Mod. 1 - 60020

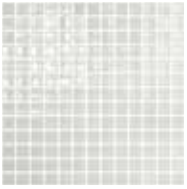
Mod. 2 - 54369


Mod. 3 - 54256
(Matt - C3)

| | Code |
|---|---|
| White model 1 | 60020 |
| White model 2 | 54369 |
| White model 3 | 54256 |

54369

# Anti-slip

Mod. 1 - 54282
(Matt - C3)

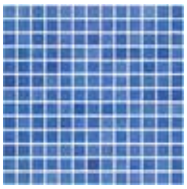
Mod. 2 - 54278
(Matt - C3)

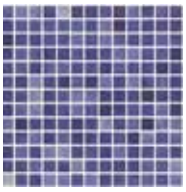
Mod. 3 - 54279
(Matt - C3)

| | Code |
|---|---|
| Anti-slip model 1 | 54282 |
| Anti-slip model 2 | 54278 |
| Anti-slip model 3 | 54279 |

# Blue

Mod. 1 - 54403

Mod. 2 - 54399

Mod. 3 - 54400

Mod. 4 - 54365

Mod. 5 - 54364

Mod. 6 - 54363

| | Code |
|---|---|
| Blue model 1 | 54403 |
| Blue model 2 | 54399 |
| Blue model 3 | 54400 |
| Blue model 4 | 54365 |
| Blue model 5 | 54364 |
| Blue model 6 | 54363 |

# Premium Pearl Finish Mix

| | Code |
|---|---|
| **33.4 x 33.4 cm / 13.15" x 13.15"** | |
| Tokyo | TOKY25Y |
| Montreal | MONT25Y |
| Paris | PARI25Y |
| Milan | MILA25Y |
| Sydney | SYDN25Y |
| Boston | BOST25Y |
| Durban | DURB25Y |

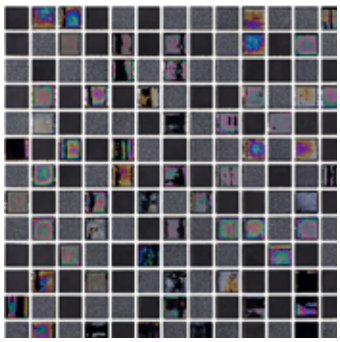

33% MA33 / 33% MT05 / 33% G312

TOKYO

TOKIO

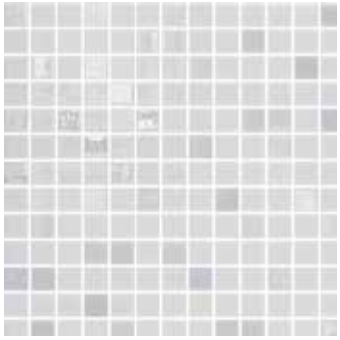

80% BLANCO / 20% G305

MONTREAL

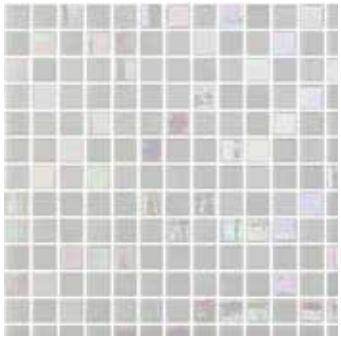

33% G305 / 33% MT04 / 33% NIEBLA BLANCO

PARIS

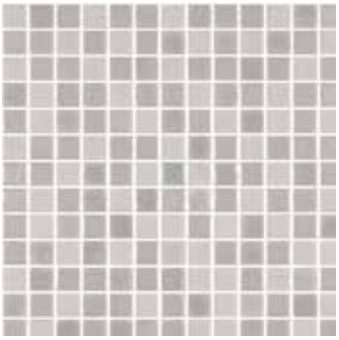

33% MA35 / 33% MT07 / 33% G329

MILAN

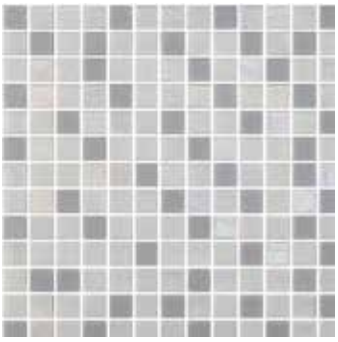

33% NIEBLA BLANCO / 33% MT01 / 33% G328

SYDNEY

33% MT01 / 33% G311 / 33% BLANCO

BOSTON

33% MA34 / 33% MT08 / 33% G330

DURBAN

# Premium Pearl Finish Mix

| | Code |
|---|---|
| **33.4 x 33.4 cm / 13.15" x 13.15"** | |
| Baltic | BALT25Y |
| Adriatic | ADRI25Y |
| Artic | ARTI25Y |
| Pacific | PACI25Y |
| Indico | INDI25Y |
| Bali | BALI25Y |
| Bahamas | BAHA25Y |
| Murano | MURA25Y |
| Martinique | MART25Y |

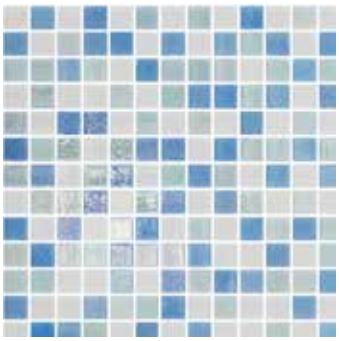

33% G322 / 33% G320 / 33% BLANCO

BALTIC

33% G322 / 33% G305 / 33% NIEBLA FUERTE

ADRIATIC

BALTIC

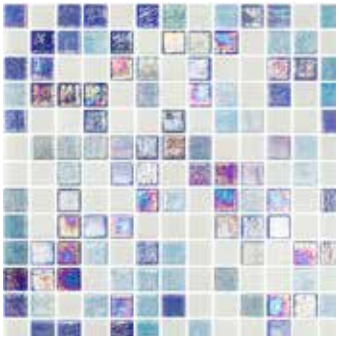

33% G325 / 33% G322 / 33% NIEBLA BLANCO

ARTIC

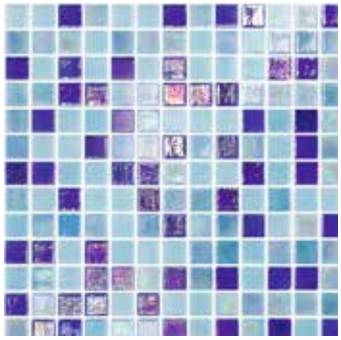

33% G325 / 33% G322 / 33% NIEBLA PISCINA

PACIFIC

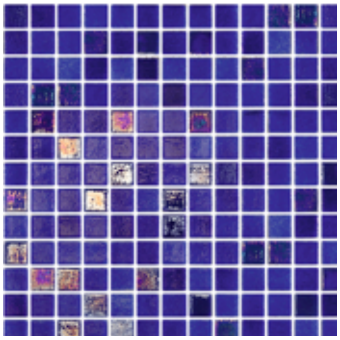

INDICO

33% G320 / 33% MT04 / 33% G328

BALI

33% G320 / 33% G305 / 33% NIEBLA MENTA

BAHAMAS

80% 202 / 20% G326

MURANO

BAHAMAS

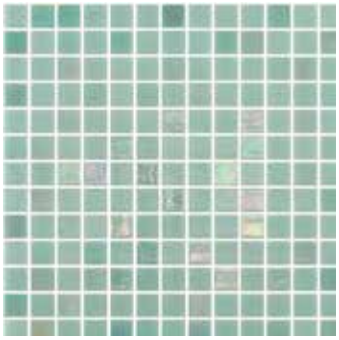

MARTINIQUE

GLASS TILING FOR POOLS

# DIGITAL

5X5 UNNION POLYURETHANE SYSTEM

| | Code |
|---|---|
| **31 x 31 cm / 13.15" x 13.15"** | |
| Matt Jade 5x5 | JADE50AY |
| Matt Hanoi 5x5 | HANO50AY |
| Matt Snow 5x5 | SNOW50AY |
| Matt Cloud 5x5 | CLOU50AY |
| Matt Sand 5x5 | SAND50AY |
| **33.4 x 33.4 cm / 13.15" x 13.15"** | |
| Itaca | ITAC25Y |
| Corfú | CPRF25Y |
| Delfos | DLFS25Y |
| Elba | ELBA25Y |

MATT JADE

MATT HANOI

ITACA

CORFÚ



MATT SNOW

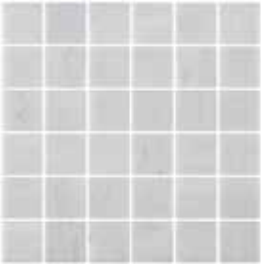

MATT CLOUD

DELFOS

ELBA

MATT SAND

# Sixties

## Sixties

WHITE

GREY

TURQUOISE

BLUE

| | Code |
|---|---|
| **32 x 29 cm / 12,60" x 11,42"** | |
| White | WHIT60Y |
| Grey | GREY60Y |
| Turquoise | TURQ60Y |
| Blue | BLUE60Y |

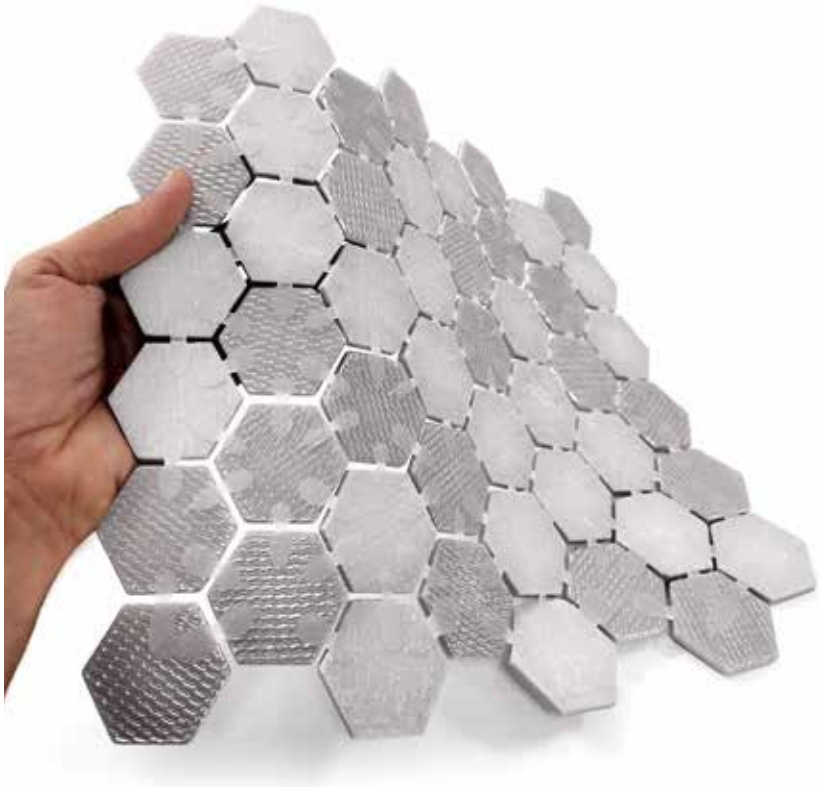

# Customized projects

We create drawings and designs in the shapes and colours of your choice. The limits are in your imagination!

BLUE



GREEN

## Luminescent

Our luminescent mosaic is ideal for signage. It shines in the dark!

| | Code |
|---|---|
| **33,4 x 33,4 cm / 13,15" x 13,15"** | |
| Blue | LU0125Y2 |
| Green | LU0225Y2 |

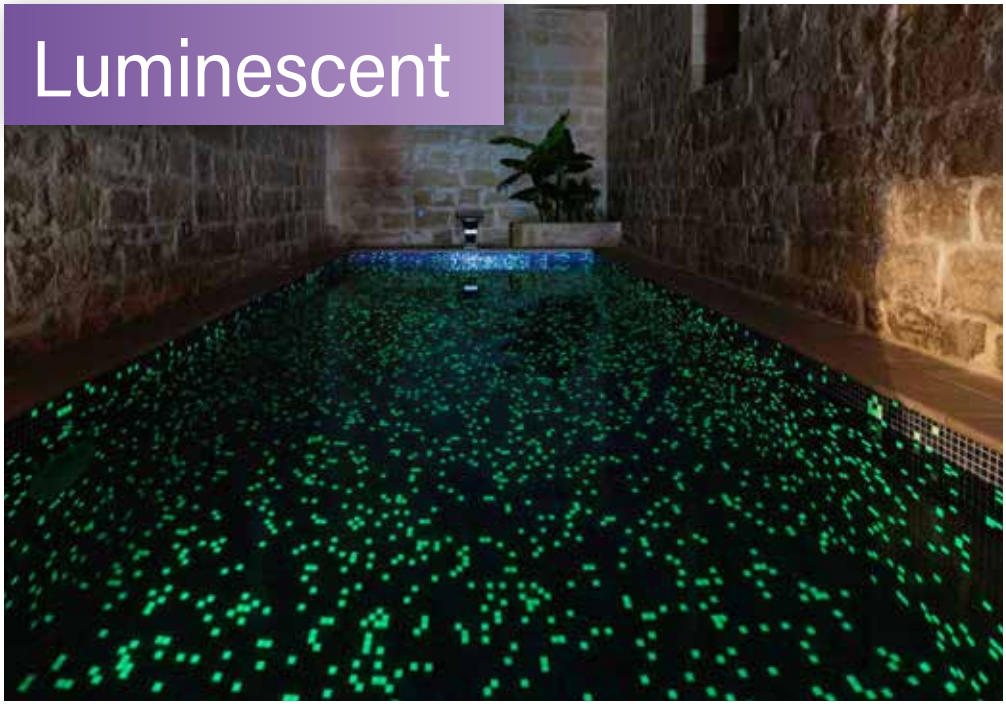

**+ PLAIN / FOG / TOGAMA MIX / MATT - NON-SLIP / PEARL / LUMINESCENT/DRAWINGS***

## PACKING LIST

| Packaging list | Dimensions/Plate | m² / Box | Kg / Box | Box / Pallet | m² / Pallet | Kg / Pallet |
|---|---|---|---|---|---|---|
| 2.5 x 2.5 cm | 33.4 x 33.4 cm | 2 | 18 | 72 | 144 | 1306 |
| 5 x 5 cm | 30.7 x 30.7 cm | 2 | 22 | 54 | 108 | 1198 |
| Sixties | 32.5 x 29.4 cm | 1 | 11 | 54 | 54 | 604 |

## TECHNICAL SPECIFICATIONS

| Standard | Description of standard | Plain | Fog | Non-slip matt | Pearl |
|---|---|---|---|---|---|
| UNE-EN 10545-3:1997 | Water absorption | < 0,10% | < 0,10% | | < 0,10% |
| UNE-EN 10545-12:1997 | Scratch resistance | Resistant | Resistant | Resistant | Resistant |
| UNE-EN 10545-13:1997 | Chemical resistance | UA/ULA/UHA | UA/ULA/UHA | UA/ULA/UHA | UA/ULA/UHA |
| UNE-EN 10545-14:1998 | Stain resistance | Class 5 | Class 5 | | Class 5 |
| UNE 67-101:1985+1M:92 | Mohs scale resistance to surface scratching | 4 | 4 | 7 | 5 |
| UNE-ENV 12633:2003 ANNEX A | Resistance to slipping (Pendulum) | | | Class 3 | |
| DIN 51130:2010 Section 5 | Critical angle of displacement (ramp) | | | R11 | |
| DIN 51097:1992 | Critical slip angle in wet areas where people walk barefoot | | | Class C | |
| ISO/DIS 10545-17:1998 ANNEX A | Dynamic friction coefficient (Tortus) | | | Excellent | |

# Recycled product - Sustainable product

## ENVIRONMENTAL PRODUCT SELF-DECLARATION PURSUANT TO UNE-EN ISO 14021

| 1 m² of glass mosaic tiling (including mesh) | |
|---|---|
| Total solid content (kg/m²) | 9.97 |
| Content of solid virgin matter | 1.25 |
| Minimum content of after-consumption recycled material (kg/m²) | 8.72 |
| MINIMUM CONTENT OF RECYCLED MATERIAL (%) [X = A / A.P.100] | 87.4 |

# Finishes - Polyurethane knit

UNNION POLYURETHANE SYSTEM

- Resistance
- Durability
- Does not get into joints
- Flexibility
- Easy to place
- Excellent grip

MADE IN SPAIN

87 %

* The borders and patterns are on paper. (Once applied to the mosaic tiling the paper must be removed).

# Hydronet

## DESCRIPTION

Is a cementitious , single component mortar that protects and waterproofs all types of brick, concrete and mortar joints from water and humidity. Formulated with hydraulic cements and modified with polymers. Resistant to freeze-thaw cycles and to contact with chlorinated water. Membrane suitable for contact with drinking water.

Sealing product suitable for pools made with Mosaic or ceramic and liner.

| | Code | Standard Pack | Standard weight in kg | Standard volume in $m^3$ |
|---|---|---|---|---|
| **Hidronet** | 65059 | - | - | - |

## TECHNICAL SPECIFICATIONS

| Code | Description | Contents (kg/pack) | Color | Density ($g/cm^3$) |
|---|---|---|---|---|
| 65059 | Hidronet | 25 | Grey | 1.3 |

# SB-Pool Sealer

## DESCRIPTION

Chemical product specially formulated to seal leaks or leaks from swimming pools, spas, hot tubs, wells, cisterns, pipes, etc.

| | Code | Standard Pack | Standard weight in kg | Standard volume in m³ |
|---|---|---|---|---|
| SB-Pool Sealer | 74725 | - | - | - |

# SB-Pool Sealer Free

## DESCRIPTION

Chemical product INNOCOUS specially formulated to seal leaks or leaks from swimming pools, spas, hot tubs, wells , cisterns. Pipes , etc

| | Code | Standard Pack | Standard weight in kg | Standard volume in m³ |
|---|---|---|---|---|
| | 76797 | - | - | - |

# SB-Pool Super40

## DESCRIPTION

Two-component adhesive, structural, flexible and fast that bonds most materials. Bonds, repairs and seals under all conditions, even underwater. Really easy to use.

| | Code | Standard Pack | Standard weight in kg | Standard volume in m³ |
|---|---|---|---|---|
| SB-Pool Super40 | 72876 | 12 | 0.101 | 0.0120 |

# SB Pool 40 24 ML

## DESCRIPTION

Two-component adhesive, structural, flexible and fast that bonds most materials. Bonds, repairs and seals under all conditions, even underwater. Really easy to use.

- New Syringe , easy to apply .

| | Code | Standard Pack | Standard weight in kg | Standard volume in m³ |
|---|---|---|---|---|
| | 76392 | - | - | - |

# SB-Pool Superplast Light

## DESCRIPTION

Adhesive putty of high mechanical properties, filled inside of an innovative flexible mono-use packaging system for several components. Bonds, repairs and seals under all conditions, even underwater. Really easy to use.

| | Code | Standard Pack | Standard weight in kg | Standard volume in m³ |
|---|---|---|---|---|
| SB-Pool Superplast Light | 72877 | 10 | 0.027 | 0.0002 |

# SB Surface Mastic

## DESCRIPTION

2-Component spreadable epoxy putty , spceially designed for permanent repairs and restorations of allmost all materials

- Weight : 400d (200+200)
- Asprect : Grey
- Hearding Time :2 h

| | Code | Standard Pack | Standard weight in kg | Standard volume in m³ |
|---|---|---|---|---|
| | 76393 | - | - | - |

# SB-Pool Sealant Tape

## DESCRIPTION

PVC tape , works in and out of the water , specially designedto repair all types of water leaks

| | Code | Standard Pack | Standard weight in kg | Standard volume in m³ |
|---|---|---|---|---|
| SB Pool Sealant Tape | 75214 | - | - | - |

# SB-Pool Epoxy Stic

## DESCRIPTION

Repair bar

| | Code | Standard Pack | Standard weight in kg | Standard volume in m³ |
|---|---|---|---|---|
| | 75215 | - | - | - |

# SPAS AND SAUNAS


608 Our range of spas
610 Coding structure for private spas with cabinet
610 Colour chart for spas
612 Optional equipment
614 Standard equipment
618 Spas - Ocean Dreams
621 Spas - Essential
623 Spas - Origins
625 Spas - Swimspas
628 Spas - In-ground
630 Compact filtration housing for spas
631 Spa accessories
634 Spa white goods & plumbing
642 Air blowers
645 Saunas
651 Saunas accessories

# ORIGINS

## THE DESIRED SIMPLICITY

## DISCOVER THE THREE NEW MODELS:

Alexandria

Malea

Baia

# THESE BASIC SPAS OFFER:

green layer

Insulating layer as a standard

COST-PRICE € RATIO

The best cost-price ratio range

APPROVED QUALITY

All the AstralPool quality

2 YEARS WARRANTY
Components

3 YEARS WARRANTY
Acrylic

5 YEARS WARRANTY
Frame

ASTRALPOOL

# Our range of spas

## Ocean Dreams range

+ Premium spa range with unlimited benefits, intended for the most demanding users.
+ Ergonomic spas, with numerous features and configuration settings.

## Swimspas range

+ Swimspas are small residential pools.
+ Versatile, powerful and compact. A health and wellness centre available all year round.

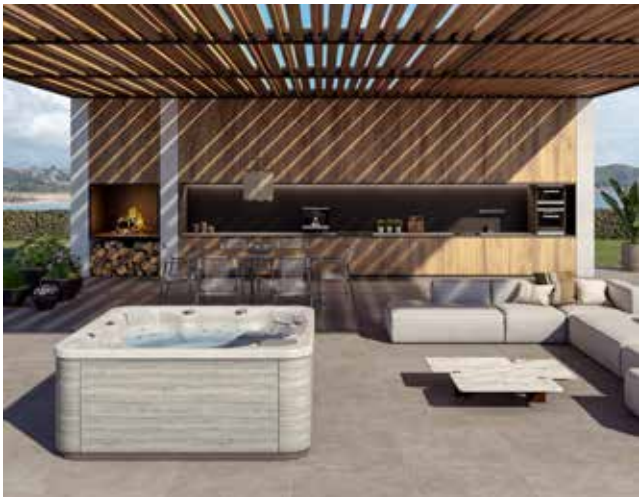

## Essential range

+ Seeking to strike a balance between performance and features, offering an optimal massage experience.
+ Functional spas able to customize the cabinet and acrylic.

## Origins range

+ An ideal range for those seeking a basic solution.
+ Basic spas with all the AstralPool quality in a variety of formats.

# Our range of spas

| | Characteristics | Acrylic colour | Cabinet colour |
|---|---|---|---|

## Ocean Dreams

★★★

### Unlimited benefits

+ Smart Hot Tubs

blue connect plus — WIFI Touch Panel

+ Energy awareness:

Ecospa — NORDIC INSULATION SYSTEM

+ Superior massage experience
+ Ultraviolet disinfection system
+ Wide range of accessories: Touch Panel, Chromatherapy, Aromatherapy and Bluetooth Audio (4.1)

Acrylic colour: N° 44 White, N° 59 Sterling, N°65 Alba, N°64 Pearl Shadow, N° 46 Blue Marble, N° 27 Silver

Cabinet colour: Graphite, Thunder, Creek, Butterfly

Pure and New'Art models

Acrylic colour: N° 44 White

Cabinet colour: Solid Surface

## Essential

★★☆

### Balance between performance and features

+ Functionality in the product
+ Insulation system:

Ecospa

+ Optimal massage experience
+ Ozone disinfection
+ Accessories: Bluetooth Audio(2.1)

Acrylic colour: N° 44 White, N° 59 Sterling, N° 65 Alba, N° 64 Pearl Shadow, N° 46 Blue Marble, N° 27 Silver

Cabinet colour: Graphite, Thunder

Balance E and Equilibre E models

Acrylic colour: N° 44 White, N° 59 Sterling

Cabinet colour: Infinity

## Origins

★☆☆

### The desired simplicity

+ The best cost-price ratio
+ Insulating layer as a standard:

green layer

+ Ideal massage experience
+ Ozone disinfection
+ Accessories: Bluetooth Audio (2.0)

Acrylic colour: N° 44 White, N° 59 Sterling

Cabinet colour: Ash

# Coding structure for private spas with cabinet

The coding structure for the wood cabinet spas is made up of 10 digits. The first 5 digits refer to the Spa model and the following ones indicate the coating type, the colour of the accessories, the equipment options and the colour of the acrylic.

This coding system will be structured in the following way:

| XXXXX | XX | X | XX | CL | XX |
|---|---|---|---|---|---|
| Spa Model | Coating type | Accessories | Equipment | Variation | Colour chart |

**Position 1 to 5: Standard code 5 figure code**

**Position 6 to 7: Coating type definition**

| | |
|---|---|
| A1 | Coastal Grey portable spa with cabinet |
| A4 | Portable spa without cabinet |
| SE | In-ground spa, compact kit version |
| AB | Urban Grey cabinet |
| AK | Graphite cabinet |
| AP | Graphite cabinet with screw |
| AR | Thunder cabinet |
| AQ | Thunder cabinet with screw |
| AT | Creek cabinet |
| AC | Infinity cabinet old timber |
| SS | Solid Surface cabinet |
| AW | Butterfly cabinet |
| BA | Ash cabinet |

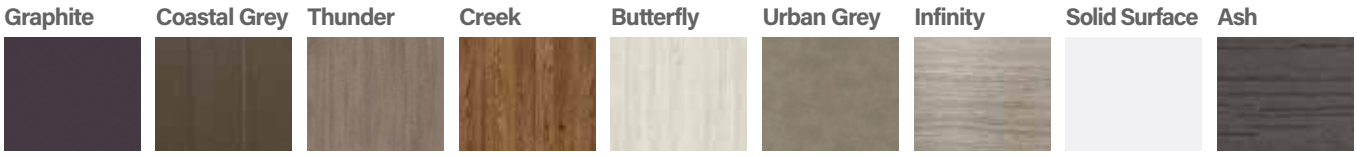


**Position 8: Accessories colour definition**

| | |
|---|---|
| 3 | Stainless steel |

**Positions 9 to 10: Options configuration definition**

| | |
|---|---|
| 00 | Std + Cover |
| 05 | Std + Cover + EcoSpa |
| 20 | Std + Cover + LumiPlus |
| 21 | Std + Cover + EcoSpa + LumiPlus |
| 23 | Std + Cover + LumiPlus + Audio |
| 32 | Std + Cover + LumiPlus + Stainless steel bar on cabinet |
| 27 | Std + Cover + LumiPlus + EcoSpa + Stainless steel bar on cabinet |
| 33 | Std + Cover + LumiPlus + Audio + Stainless steel bar on cabinet |
| 34 | Std + Cover + LumiPlus + EcoSpa + Audio |
| 35 | Std + Cover + LumiPlus + EcoSpa + Audio + Stainless steel bar on cabinet |
| 56 | Std + Cover + LumiPlus + EcoSpa + Audio + Stainless steel bar on cabinet + Wi-Fi Touch Panel |
| 55 | Std + Cover + LumiPlus + EcoSpa + Nordic Insulation System + Audio + Stainless steel bar on cabinet + Wi-Fi Touch Panel |
| 0J | Std + Cover + LumiPlus + EcoSpa + Stainless steel bar on cabinet + Blue Connect Plus |

# Colour chart for spas

N° 44 WHITE

N° 59 STERLING

N°65 ALBA

N° 64 PEARL SHADOW
**While stocks last**

N° 46 BLUE MARBLE
**While stocks last**

N° 27 SILVER

OPTIONAL EQUIPMENT

# EcoSpa thermal insulation

EcoSpa is one of the best thermal insulation systems currently available in the market. This comprehensive system manages to minimize heat loss by convection and conduction, and to use the heat generated by the heater and pumps found in the spa. The walls have an exclusive 30 mm thick layer of polyurethane foam insulation. A strong ABS substructure of insulating plastic at the bottom of the spa ensures total water tightness. Finally, an isothermal cover of between 100 and 130 cm thick gives extra insulation.

All of these features reduce heat loss to a minimum and maximize the recovery of the heat generated by the spa's components, thus reducing energy consumption by up to 67%. With EcoSpa, consumption to maintain the water at 38º with a room temperature of 20º is 6.48 kW/h, while without this system it is 19.52 kW/h.

EcoSpa option

# Nordic Insulation System

NORDIC INSULATION SYSTEM is designed for cold environments and can enhance your spa's energy efficiency.

The Nordic Insulation System comprises a 10mm insulating material composed of five layers. This insulation layer is positioned in the sides and curves of the spa to create an insulating air chamber inside. The five layers are made from:

- Aluminium.
- RC9 bubble + low-density polyethylene (double layer).
- FONPEX non-crosslinked polyethylene foam (20 kg/m$^3$).
- RC9 bubble + low-density polyethylene (double layer).
- Aluminium.

This system is an improvement over the EcoSpa class as it minimizes temperature leak zones and optimizes spa energy performance in extreme temperature situations.

Difference between the EcoSpa and Nordic Insulation System in thermal imaging:

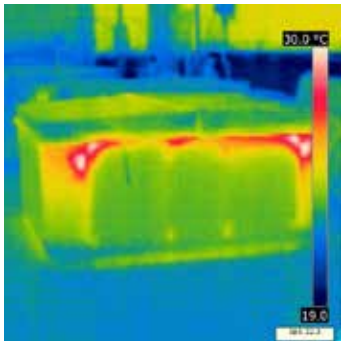


Spa with EcoSpa

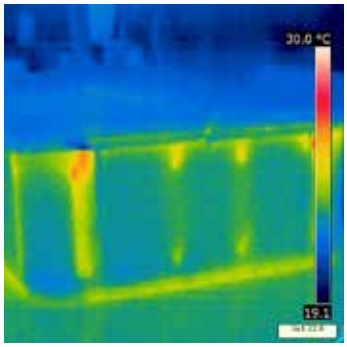


Spa with Nordic Insulation System

# Wi-Fi Touch panel

The Balboa Wi-Fi control panel is an app for your smart device (Android™ or iPhone®) which lets you access your spa over the internet from anywhere, home or away. All you need is a 3G, 4G or Wi-Fi connection to access and control your spa over your mobile phone or tablet.

By using the Wi-Fi control panel, you can make sure that your spa is ready for use every time you want to take a dip. Instead of having to go outside and fiddle around with the buttons on the control panel, this app will enable you to change your spa's settings from your mobile phone or tablet.

The app has a full control interface so you can set the water temperature, run the massage pumps and even control the filtration cycle.

OPTIONAL EQUIPMENT

# LumiPlus + Bluetooth Audio System,

## only available for fully skirted portable spas

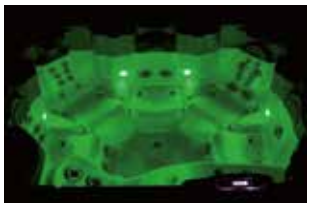

Natural treatments are one of the main sources of health provided by a spa. Chromotherapy and music therapy are the perfect accompaniment to any hot tub.

Chromotherapy is the natural technique based on the use of colours to help your mind and body find their natural physical, mental and emotional balance. By choosing the LumiPlus option, 5 LED spotlights are added to your spa so that you can enjoy a spectacular ambient lighting system. Thanks to the 5 LED spotlights, you can choose the colours that match your mood at any given time.

The Bluetooth Audio System enables music to be played from any mobile phone, MP4 Player or audio equipment via a simple Bluetooth connection, without the need for any cables and with coverage of up to 7 metres. Now you can truly make your spa a centre of relaxation, health and beauty.

The Ocean Dreams range has a 4.1 Bluetooth Audio system made up of 4 external loudspeakers, an internal subwoofer and a Bluetooth receiver.

The Essential range has a 2.1 Bluetooth Audio system made up of 2 external loudspeakers, an internal subwoofer and a Bluetooth receiver.

The Origins range has a 2.0 Bluetooth Audio system made up of 2 external loudspeakers and a Bluetooth reciever.

LumiPlus + Bluetooth Audio System option

# Blue Connect Plus

### Enjoy your Hot Tub with peace of mind

Blue Connect analyzes the quality of the water and shows you the needed chemicals for the maintenance of your Hot Tub.

### Advanced technology connected to your smartphone

Blue Connect Plus is a smart hot tub water analyser that controls the quality of your water and informs you about the number of products available for your hot tub. All from your smartphone.

### Sit back and relax. Thanks to Blue Connect, your Hot Tub is at your fingertips

Monitor your Hot Tub wherever you are with the connected Hot Tub water analyzer and the free Blue Connect app.

For more info check page 352.

STANDARD EQUIPMENT

# Balboa Electronics,

## standard in all spas

AstralPool only uses new generation control systems made by BALBOA, a leading supplier of electronic controls for hydromassage tubs and spas.

With the continual improvement made to its designs and its innovative solutions to increase the quality and reliability of its systems, the Balboa EL/GL and VS/GS family of control systems has been designed using patented M7 technology for temperature and flow sensors, and its new universal control system increases the flexibility of its functions and reduces installation and configuration problems.

These characteristics make the controls even more reliable, easier to install and easier to use.

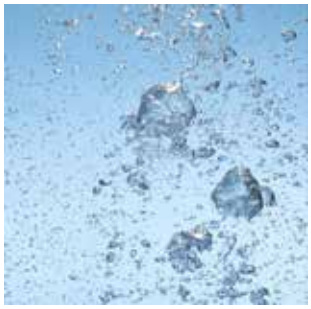

# Ozone disinfection system

Ozone is "active oxygen", a special element found in nature. Ozone is a powerful oxidising agent and, unlike traditional chemical products, it does not leave toxic waste behind, and when it has done its work it simply turns back into oxygen. Moreover, tests have proved that it effectively kills bacteria and mould.

AstralPool manufactures spas that give high quality performance and supplies an integrated ozone generator as a standard feature in all of its portable spas. The ozonator has numerous benefits: the water in spas will be safer, cleaner, purer, free of chloramines, trihalomethane and other chlorine by-products, with a high redox potential. Greater water clarity and algae control are obtained using lower concentrations of chemical substances.

A spa with water purified with ozone is one of the most pleasant relaxation and hydrotherapy experiences.

STANDARD EQUIPMENT

# Ultraviolet disinfection system

Spas equipped with the ultraviolet system are disinfected using UV technology. Thanks to a UV lamp, all bacteria in the water are destroyed. The advantages of the ultraviolet system can be summarized as follows:

- It ensures water remains fresh, clean and clear.
- It is an efficient and safe way of disinfecting the water.
- Its UV-C light breaks down combined chlorine.
- It protects the water from germs.
- It keeps the formation of mould, bacteria and algae under control.
- It can reduce the amount of chlorine and other chemical products used by up to 80%.
- It prevents the smell of chlorine and irritation to the skin and eyes (bloodshot eyes).
- It is more environmentally friendly than traditional methods.

Using this system, all bacteria, mould and algae will automatically be removed from your spa, and it will be protected from germs without the need for any kind of maintenance.

# Aromatherapy

## only available for spas with a blower

Aromatherapy offers the therapeutic properties of pure aromas for a natural treatment and makes a significant contribution in helping to restore your natural state of balance and harmony.

Nobody is indifferent to smells. They bring to mind emotions, memories and ideas. Increase the relaxing effect of your tub by adding a fragrance!

# Model comparison

| | Ocean Dreams range | | | | | | Essential range | | | | Origins range | | |
|---|---|---|---|---|---|---|---|---|---|---|---|---|---|
| **MODELS** | **Pure** | **New'Art** | **Evolution** | **Atlantida 70** | **Pacific 70** | **Ocean 70** | **Select E** | **Emotion E** | **Equilibre E** | **Balance E** | **Alexandria** | **Baia** | **Malea** |
| **Code** | **68450** | **68449** | **32474** | **62399** | **69130** | **69863** | **76894** | **69122** | **73076** | **74134** | **76307** | **76173** | **76306** |
| **General Information** | | | | | | | | | | | | | |
| Size cm (± 2 cm) | 220 x 220 x 78 | 220 x 220 x 78 | 233 x 233 x 91 | 216 x 216 x 90 | 216 x 216 x 90 | 216 x 167 x 74 | 216 x 216 x 90 | 216 x 216 x 90 | 216 x 167 x 74 | 198 x 198 x 74 | 216 x 167 x 74 | 216 x 216 x 90 | 198 x 198 x 74 |
| Places (Seats/Loungers) | 4 (4 / -) | 5 (3 / 2) | 5 (3 / 2) | 5 (3 / 2) | 6 (5 / 1) | 3 (1 / 2) | 6 (5 / 1) | 5 (3 / 2) | 3 (2 / 1) | 5 (3 / 2) | 3 (1 / 2) | 5 (3 / 2) | 5 (3 / 2) |
| Graphite Cabinet | - | - | Optional | Optional | Optional | Optional | Optional | Optional | - | - | - | - | - |
| Coastal Grey Cabinet | - | - | - | - | - | - | - | - | - | - | - | - | - |
| Thunder Cabinet | - | - | Optional | Optional | Optional | Optional | Optional | Optional | - | - | - | - | - |
| Creek Cabinet | - | - | Optional | Optional | Optional | Optional | - | - | - | - | - | - | - |
| Butterfly Cabinet | - | - | Optional | Optional | Optional | Optional | - | - | - | - | - | - | - |
| Inifinity Cabinet | - | - | - | - | - | - | - | - | Optional | Optional | - | - | - |
| Solid surface Cabinet | • | • | - | - | - | - | - | - | - | - | - | - | - |
| Ash Cabinet | - | - | - | - | - | - | - | - | - | - | • | • | • |
| Without Cabinet | - | - | Optional | Optional | Optional | Optional | Optional | Optional | Optional | Optional | - | - | - |
| **Options** | | | | | | | | | | | | | |
| Nordic Insulation System | Optional | Optional | Optional | Optional | Optional | Optional | - | - | - | - | - | - | - |
| EcoSpa thermal insulation | • | • | Optional | Optional | Optional | Optional | Optional | Optional | Optional | Optional | – | – | - |
| Green Layer Insulation | - | - | - | - | - | - | - | - | - | - | • | • | • |
| Bluetooth Audio system | Optional (Sist. 4.1) | Optional (Sist. 4.1) | Optional (Sist. 4.1) | Optional (Sist. 4.1) | Optional (Sist. 4.1) | Optional (Sist. 4.1) | Optional (Sist. 2.1) | Optional (Sist. 2.1) | - | Optional (Sist. 2.1) | Optional (Sist. 2.0) | Optional (Sist. 2.0) | Optional (Sist. 2.0) |
| LumiPlus LED lighting system | • | • | • | • | • | • | Optional | Optional | - | - | – | – | - |
| Stainless steel jets | • | • | • | • | • | • | • | • | • | • | • | • | • |
| Stainless steel bar | - | - | • | • | • | • | - | - | - | - | - | - | - |
| Wi-Fi Touch Panel | Optional | Optional | Optional | Optional | Optional | Optional | - | - | - | - | - | - | - |
| Blue Connect Plus | - | - | Optional | Optional | Optional | Optional | - | - | - | - | - | - | - |
| **Configurations** | | | | | | | | | | | | | |
| No of jets | 27 | 28 | 56 | 52 | 51 | 42 | 51 | 32 | 26 | 31 | 26 | 62 | 31 |
| No. of blower nozzles | 12 | 14 | 16 | 14 | 10 | - | - | 12 | - | 12 | - | - | 12 |
| Waterfalls | - | - | - | 2 | 2 | - | 1 | - | - | - | - | - | - |
| Water Fountain | - | - | 2 | - | - | - | - | - | - | - | - | - | - |
| Headrests | 2 | 3 | 3 | 3 | 3 | 3 | 3 | 3 | 3 | 3 | 3 | 3 | 3 |
| Digital control panel | 1 | 1 | 2 | 1 | 1 | 1 | 1 | 1 | 1 | 1 | 1 | 1 | 1 |
| Oxynator | - | - | - | - | - | - | • | • | • | • | • | • | • |
| Ultraviolet | • | • | • | • | • | • | - | - | - | - | – | – | – |
| Aromatherapy | • | – | • | • | • | - | - | - | - | - | – | – | – |
| Chromotherapy | 5 LEDs + light Tab | 5 LEDs + light Tab | 5 LEDs + light Tab | 5 LEDs + light Tab | 5 LEDs + light Tab | 5 LEDs + light Tab | 1 LED | 1 LED | 1 LED | 1 LED | 1 LED | 1 LED | 1 LED |
| **Structure and Cover** | | | | | | | | | | | | | |
| High-resistance metal structure | • | • | • | • | • | • | • | • | • | • | • | • | • |
| Insulating ABS base | • | • | • | • | • | • | • | • | • | • | • | • | • |
| Isothermal cover | • | • | • | • | • | • | • | • | • | • | • | • | • |
| **Technical equipment** | | | | | | | | | | | | | |
| Filter pump | 200 W | 200 W | 200 W | 200 W | 200 W | 200 W | 200 W | 200 W | - | - | - | 200W | - |
| Massage pump | 1.8 kW / 2.5 HP | 1.8 kW / 2.5 HP | 2 x 2.2 kW / 3 HP | 2 x 1.8 kW / 2.5 HP | 2 x 1.8 kW / 2.5 HP | 2.2 kW / 3 HP | 2 x 1.8 kW / 2.5 HP | 1 x 1.8 kW / 2.5 HP | 1.8 kW / 2.5 HP, 2 Vel | 1.8 kW / 2.5 HP, 2 Vel. | 1.8 kW / 2.5 HP | 2 x 1.8 kW / 2.5 HP | 1.8 kW / 2.5 HP |
| Blower pump | 1150 W | 1150 W | 400 W | 400 W | 400 W | - | - | 400 W | - | 400 W | - | - | 400 W |
| Electric heater | 3 kW | 3 kW | 3 kW | 3 kW | 3 kW | 3 kW | 3 kW | 3 kW | 3 kW | 3 kW | 2 kW | 3 kW | 2 kW |
| **Power consumption and capacity** | | | | | | | | | | | | | |
| Consumption in low amps (W) | 3400 W | 3400 W | 5200 W | 4400 W | 4400 W | 3400 W | 3780 W | 3400 W | 3400 W | 3400 W | 2400 W | 3800 W | 2650 W |
| Required power (A) at 230 V | 14.6 A | 14.6 A | 22.4 A | 19.1 A | 19.1 A | 14.6 A | 16.8 A | 14.6 A | 14.6 A | 14.6 A | 10.4 A | 16.5 A | 11.5 A |
| 230 V or 400 V III connection | • | • | • | • | • | • | • | • | • | • | • | • | • |
| Water capacity (litres) | 975 l | 975 l | 1.610 l | 1.138 l | 1.138 l | 780 l | 930 l | 930 l | 780 l | 935 l | 780 l | 980 l | 935 l |
| Spa weight (Empty / Full) | 450 kg / 1425 kg | 450 kg / 1425 kg | 378 kg / 1988 kg | 327 kg / 1227 kg | 327 kg / 1465 kg | 229 kg / 1009 kg | 327 kg / 1257 kg | 327 kg / 1257 kg | 307 kg / 1087 kg | 246 kg / 1181 kg | 229 kg / 1009 kg | 330 kg / 1310 kg | 253 kg / 1181 kg |

SPA RANGE

# Model comparison

| | | | | | | | | |
|---|---|---|---|---|---|---|---|---|
| | Swimspa range | | | | | In-ground range | | |
| **MODELS** | **Swimspa Dual** | **Swimspa Mediterranea** | **Swimspa Creta** | **Swimspa Compact** | **Swimspa Lagoon** | **Evolution 70** | **Thalassa E** | **Ronda 30** |
| **Code** | **74238** | **64414** | **67203** | **69128** | **74237** | **49722** | **78678** | **49859** |
| **General Information** | | | | | | | | |
| Size cm (± 2 cm) | 600 x 230 x 138 | 500 x 230 x 138 | 400 x 230 x 138 | 400 x 230 x 138 | 400 x 230 x 138 | 216 x 216 x 90 | 216 x 216 x 90 | Ø 205 |
| Places (Seats/Loungers) | 1 Vertical + 4 (2 / 2) | 4 (2 / 2) | 4 (2 / 1 / 1) | 1 Vertical | 1 Vertical | 5 (3 / 2) | 6 (5 / 1) | 5 (5 / 0) |
| Graphite Cabinet | - | - | - | - | - | - | - | - |
| Coastal Grey Cabinet | Optional | Optional | Optional | Optional | Optional | - | - | - |
| Thunder Cabinet | - | - | - | - | - | - | - | - |
| Creek Cabinet | - | - | - | - | - | - | - | - |
| Butterfly Cabinet | - | - | - | - | - | - | - | - |
| Urban Grey Cabinet | Optional | Optional | Optional | Optional | - | - | - | - |
| Solid surface Cabinet | - | - | - | - | - | - | - | - |
| Without Cabinet | Optional | Optional | Optional | Optional | Optional | • | • | • |
| **Options** | | | | | | | | |
| EcoSpa thermal insulation | Optional | Optional | Optional | Optional | Optional | - | - | - |
| Nordic Insulation System | - | - | - | - | - | - | - | - |
| Bluetooth Audio system | Optional (Sist. 4.1) | Optional (Sist. 4.1) | Optional (Sist. 4.1) | Optional (Sist. 4.1) | - | - | - | - |
| LumiPlus LED lighting system | • | • | • | • | • | - | - | - |
| Stainless steel jets | • | • | • | • | • | • | • | • |
| Stainless steel bar | • | • | • | • | - | - | - | - |
| Wi-Fi Spa Control | Optional | Optional | Optional | Optional | - | - | - | - |
| Blue Connect Plus | Optional | Optional | Optional | Optional | Optional | Optional | Optional | Optional |
| Rowing Kit | Optional. Code: 74496 | - | Optional | - | Optional | - | - | - |
| **Configurations** | | | | | | | | |
| No of jets | 16 + 5 Turbo Jets + 30 Jets | 27 + 5 Turbo Jets | 54 + 4 Turbo Jets | 16+5 Turbo Jets | 12 | 56 | 28 | 20 + 10 |
| No. of blower nozzles | - | - | - | - | - | 16 | 16 | 20 |
| Waterfalls | - | 1 | - | - | - | - | - | 10 |
| Headrests | 3 | 2 | 3 | - | - | 3 | 3 | - |
| Touch Panel | 2 | 1 +aux | 1 | 1 | Balboa TP600 | 1 | 1 | 1 |
| Oxynator | - | - | - | - | - | Optional | Optional | Optional |
| Ultraviolet | • | • | • | • | • | - | - | - |
| Aromatherapy | - | - | - | - | - | - | - | - |
| Chromotherapy | 5 LEDs + light Tab | 5 LEDs + light Tab | 5 LEDs + light Tab | 5 LEDs + light Tab | 1 LED | 1 LED | 1 LED | 1 LED |
| **Structure and Cover** | | | | | | | | |
| High-resistance metal structure | • | • | • | • | • | • | • | • |
| Insulating base | • | • | • | • | • | • | • | • |
| Isothermal cover | • | • | • | • | • | Optional | Optional | Optional |
| **Technical equipment** | | | | | | | | |
| Filter pump | 400 W + 200 W | 400 W | 400 W | 400 W | 400 W | 600 W | 600 W | 600 W |
| Massage pump | 3 x 2.2 kW / 3 HP + 2.2 kW / 3 HP | 3 x 2.2 kW / 3 HP | 3 x 2.2 kW / 3 HP | 3 x 2.2 kW / 3 HP | 1,5 kW / 2HP | 2 x 2.2 kW / 3 HP | 1 x 1.8 kW / 2.5 HP | 1 x 1.8 kW / 2.5 HP |
| Blower pump | - | - | - | - | - | 900 W | 900 W | 900 W |
| Electric heater | 3 kW + 3 kW | 3 kW | 3 kW | 3 kW | 3 kW | 3 kW | 3 kW | 3 kW |
| **Power consumption and capacity** | | | | | | | | |
| Consumption in low amps (W) | 9500 W | 7000 W | 7000 W | 7000 W | 3400 W | 5927 W | 3650 W | 3650 W |
| Required power (A) at 230 V | 41.3 A | 30.4 A | 30.4 A | 30.4 A | 14.78 A | 25.8 A | 15.9 A | 15.9 A |
| 230 V or 400 V III connection | • | • | • | • | • | • | • | • |
| Water capacity (litres) | 6780 l | 8500 l | 6000 l | 6000 l | 6000 l | 1610 l | 980 l | 780 l |
| Spa weight (Empty / Full) | 1379 kg / 8159 kg | 1177 kg / 9677 kg | 1177 kg / 7177 kg | 1150 kg / 7150 kg | 1150 kg / 7150 kg | 378 Kg / 1988 Kg | 330 kg / 1310 kg | 307 kg / 1445 kg |

# Pure - Code 68450

White (44)
Solid surface Cabinet

| TECHNICAL FEATURES | |
|---|---|
| Size in cm (± 2cm) | 220 x 220 x 78 |
| Positions (Seats / Loungers) | 4 (4 / -) |
| Jets + blower nozzles | 27 + 12 |
| Maximum consumption in low amp - (A) at 230 V | 3400 W - 14.6 A |

**ACRYLIC COLOURS**

N° 44

**Spa coding with options generated from the table on page 610.**

**Options:**
- **Audio Bluetooth 4.1**
- **Nordic Insulation System**
- **Wi-Fi Touch Panel**

| | Code | Standard Pack | Standard weight in kg | Standard volume in m³ |
|---|---|---|---|---|
| **PURE** | | | | |
| White Solid Surface cabinet + PureLine + ECOSpa | 68450SS336 | - | - | - |
| White Solid Surface cabinet + PureLine + Bluetooth Audio+ ECOSpa | 68450SS337 | - | - | - |

# New'Art - Code 68449

White (44)
Solid surface Cabinet

| TECHNICAL FEATURES | |
|---|---|
| Size in cm (± 2cm) | 220 x 220 x 78 |
| Positions (Seats / Loungers) | 5 (3 / 2) |
| Jets + blower nozzles | 28 + 14 |
| Maximum consumption in low amp - (A) at 230 V | 3400 W - 14.6 A |

**ACRYLIC COLOURS**

N° 44

**Spa coding with options generated from the table on page 610.**

**Options:**
- **Audio Bluetooth 4.1**
- **Nordic Insulation System**
- **Wi-Fi Touch Panel**

| | Code | Standard Pack | Standard weight in kg | Standard volume in m³ |
|---|---|---|---|---|
| **NEW'ART** | | | | |
| White Solid Surface cabinet + PureLine + ECOSpa | 68449SS336 | - | - | - |
| White Solid Surface cabinet + PureLine + Bluetooth Audio + ECOSpa | 68449SS337 | - | - | - |

We reserve the right to change, wholly or partially, the features of our products and the contents of this document, without prior notice

SPAS - OCEAN DREAMS

# Evolution - Code 32474

White (44)
Graphite cabinet

## ACRYLIC COLOURS

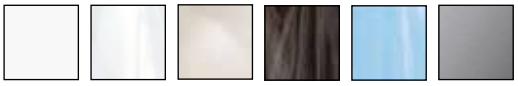

N° 44 N° 59 N°65 N° 64 N° 46 N° 27

## TECHNICAL FEATURES

| | |
|---|---|
| Size in cm (± 2cm) | 233 x 233 x 90 |
| Positions (Seats / Loungers) | 5 (3 / 2) |
| Jets + blower nozzles | 56+16+2 water fountains |
| Maximum consumption in low amp - (A) at 230 V | 5200 W - 22.4 A |

**Spa coding with options generated from the table on page 610.**

**Options:**
- **EcoSpa**
- **Audio Bluetooth 4.1**
- **Nordic Insulation System**
- **Wi-Fi Touch Panel**
- **Blue Connect Plus**

| | Code | Standard Pack | Standard weight in kg | Standard volume in m³ |
|---|---|---|---|---|
| **EVOLUTION** | | | | |
| Metallic structure without furniture + Stainless steel jets + LumiPlus + Cover | 32474A4320 | - | - | - |
| Graphite cabinet + Stainless steel jets + Stainless steel bar + LumiPlus + Cover | 32474AK332 | - | - | - |
| Thunder cabinet + Stainless steel jets + Stainless steel bar + LumiPlus + Cover | 32474AR332 | - | - | - |
| Creek cabinet + Stainless steel jets + Stainless steel bar + LumiPlus + Cover | 32474AT332 | - | - | - |
| Butterfly cabinet + Stainless steel jets + Stainless steel bar + LumiPlus + Cover | 32474AW332 | - | - | - |

# Atlantida 70 - Code 62399

Silver (27)
Thunder Cabinet

## ACRYLIC COLOURS

N° 44 N° 59 N°65 N° 64 N° 46 N° 27

## TECHNICAL FEATURES

| | |
|---|---|
| Size in cm (± 2cm) | 216 x 216 x 90 |
| Positions (Seats / Loungers) | 5 (3 / 2) |
| Jets + blower nozzles | 52 + 14 + 2 waterfalls |
| Maximum consumption in low amp - (A) at 230 V | 4400 W - 19.1 A |

**Spa coding with options generated from the table on page 610.**

**Options:**
- **EcoSpa**
- **Audio Bluetooth 4.1**
- **Nordic Insulation System**
- **Wi-Fi Touch Panel**
- **Blue Connect Plus**

| | Code | Standard Pack | Standard weight in kg | Standard volume in m³ |
|---|---|---|---|---|
| **ATLANTIDA 70** | | | | |
| Metallic structure without furniture + Stainless steel jets + LumiPlus + Cover | 62399A4320 | - | - | - |
| Graphite cabinet + Stainless steel jets + Stainless steel bar + LumiPlus + Cover | 62399AK332 | - | - | - |
| Thunder cabinet + Stainless steel jets + Stainless steel bar + LumiPlus + Cover | 62399AR332 | - | - | - |
| Creek cabinet + Stainless steel jets + Stainless steel bar + LumiPlus + Cover | 62399AT332 | - | - | - |
| Butterfly cabinet + Stainless steel jets + Stainless steel bar + LumiPlus + Cover | 62399AW332 | - | - | - |

We reserve the right to change, wholly or partially, the features of our products and the contents of this document, without prior notice

# Pacific 70 - Code 69130

White (44)
Butterfly Cabinet

## ACRYLIC COLOURS

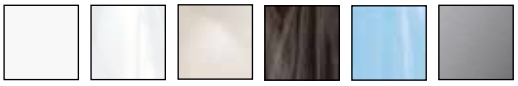

N° 44 | N° 59 | N°65 | N° 64 | N° 46 | N° 27

## TECHNICAL FEATURES

| | |
|---|---|
| Size in cm (± 2cm) | 216 x 216 x 90 |
| Positions (Seats / Loungers) | 6 (5 / 1) |
| Jets + blower nozzles | 51+10 + 2 waterfalls |
| Maximum consumption in low amp - (A) at 230 V | 4400 W - 19.1 A |

**Spa coding with options generated from the table on page 610.**

**Options:**
- **EcoSpa**
- **Audio Bluetooth 4.1**
- **Nordic Insulation System**
- **Wi-Fi Touch Panel**
- **Blue Connect Plus**

| | Code | Standard Pack | Standard weight in kg | Standard volume in m³ |
|---|---|---|---|---|
| **PACIFIC 70** | | | | |
| Metallic structure without furniture + Stainless steel jets + LumiPlus + Cover | 69130A4320 | - | - | - |
| Graphite cabinet + Stainless steel jets + Stainless steel bar + LumiPlus + Cover | 69130AK332 | - | - | - |
| Thunder cabinet + Stainless steel jets + Stainless steel bar + LumiPlus + Cover | 69130AR332 | - | - | - |
| Creek cabinet + Stainless steel jets + Stainless steel bar + LumiPlus + Cover | 69130AT332 | - | - | - |
| Butterfly cabinet + Stainless steel jets + Stainless steel bar + LumiPlus + Cover | 69130AW332 | - | - | - |

# Ocean 70 - Code 69863

White (44)
Creek Cabinet

## ACRYLIC COLOURS

N° 44 | N° 59 | N°65 | N° 64 | N° 46 | N° 27

## TECHNICAL FEATURES

| | |
|---|---|
| Size in cm (± 2cm) | 216 x 167 x 74 |
| Positions (Seats / Loungers) | 3 (1 / 2) |
| Jets | 42 |
| Maximum consumption in low amp - (A) at 230 V | 3400 W - 14.6 A |

**Spa coding with options generated from the table on page 610.**

**Options:**
- **EcoSpa**
- **Audio Bluetooth 4.1**
- **Nordic Insulation System**
- **Wi-Fi Touch Panel**
- **Blue Connect Plus**

| | Code | Standard Pack | Standard weight in kg | Standard volume in m³ |
|---|---|---|---|---|
| **OCEAN 70** | | | | |
| Metallic structure without furniture + Stainless steel jets + LumiPlus + Cover | 69863A4320 | - | - | - |
| Graphite cabinet + Stainless steel jets + Stainless steel bar + LumiPlus + Cover | 69863AK332 | - | - | - |
| Thunder cabinet + Stainless steel jets + Stainless steel bar + LumiPlus + Cover | 69863AR332 | - | - | - |
| Creek cabinet + Stainless steel jets + Stainless steel bar + LumiPlus + Cover | 69863AT332 | - | - | - |
| Butterfly cabinet + Stainless steel jets + Stainless steel bar + LumiPlus + Cover | 69863AW332 | - | - | - |

We reserve the right to change, wholly or partially, the features of our products and the contents of this document, without prior notice

SPAS - ESSENTIAL

# Select E - Code 76894

White (44)
Thunder Cabinet

## ACRYLIC COLOURS

N° 44 | N° 59 | N°65 | N° 64 | N° 46 | N° 27

## TECHNICAL FEATURES

| | |
|---|---|
| Size in cm (± 2cm) | 216 x 216 x 90 |
| Positions (Seats / Loungers) | 6 (5 / 1) |
| Jets | 51 + 1 waterfall |
| Maximum consumption in low amp - (A) at 230 V | 3.780 W - 16.8 A |

**Spa coding with options generated from the table on page 610.**

**Options:**
- **LumiPlus**
- **EcoSpa**
- **Audio Bluetooth 2.1**

| | Code | Standard Pack | Standard weight in kg | Standard volume in m³ |
|---|---|---|---|---|
| **SELECT E** | | | | |
| Metallic structure without furniture + Stainless steel jets + Cover | 76894A4300 | - | - | - |
| Graphite cabinet + Stainless steel jets + Cover | 76894AP300 | - | - | - |
| Thunder cabinet + Stainless steel jets + Cover | 76894AQ300 | - | - | - |

# Emotion E - Code 69122

White (44)
Thunder cabinet

## ACRYLIC COLOURS

N° 44 | N° 59 | N°65 | N° 64 | N° 46 | N° 27

## TECHNICAL FEATURES

| | |
|---|---|
| Size in cm (± 2cm) | 216 x 216 x 90 |
| Positions (Seats / Loungers) | 5 (3 / 2) |
| Water Jets | 32 |
| Air Jets | 12 |
| Maximum consumption in low amp - (A) at 230 V | 3.400 W - 14.8 A |

**Spa coding with options generated from the table on page 610.**

**Options:**
- **EcoSpa**
- **LumiPlus**
- **Audio Bluetooth 2.1**

| | Code | Standard Pack | Standard weight in kg | Standard volume in m³ |
|---|---|---|---|---|
| **EMOTION E** | | | | |
| Metallic structure without furniture + Stainless steel jets + Cover | 69122A4300 | - | - | - |
| Graphite cabinet + Stainless steel jets + Cover | 69122AP300 | - | - | - |
| Thunder cabinet + Stainless steel jets + Cover | 69122AQ300 | - | - | - |

We reserve the right to change, wholly or partially, the features of our products and the contents of this document, without prior notice

# Equilibre E - Code 73076

PROFESSIONAL ADVICE RECOMMENDED

White (44)
Infinity Cabinet

| TECHNICAL FEATURES | |
|---|---|
| Size in cm (± 2cm) | 216 x 167 x 74 |
| Positions (Seats / Loungers) | 3 (1 / 2) |
| Jets | 26 |
| Maximum consumption in low amp - (A) at 230 V | 3400 W - 14.8 A |

**Spa coding with options generated from the table on page 610.**

**Options:**
- **EcoSpa**

ACRYLIC COLOURS

N° 44 N° 59

| | Code | Standard Pack | Standard weight in kg | Standard volume in m³ |
|---|---|---|---|---|
| **EQUILIBRE E** | | | | |
| Metallic structure without furniture + Stainless steel jets + Cover | 73076A4300 | - | - | - |
| Infinity cabinet + Stainless steel jets + Cover | 73076AC300 | - | - | - |

# Balance E - Code 74134

PROFESSIONAL ADVICE RECOMMENDED

White (44)
Infinity Cabinet

| TECHNICAL FEATURES | |
|---|---|
| Size in cm (± 2cm) | 198 x 198 x 74 |
| Positions (Seats / Loungers) | 5 (3 / 2) |
| Jets | 31 |
| Maximum consumption in low amp - (A) at 230 V | 3400 W - 14.6 A |

**Spa coding with options generated from the table on page 610.**

**Options:**
- **EcoSpa**
- **Audio Bluetooth 2.1**

ACRYLIC COLOURS

N° 44 N° 59

| | Code | Standard Pack | Standard weight in kg | Standard volume in m³ |
|---|---|---|---|---|
| **BALANCE E** | | | | |
| Metallic structure without furniture + Stainless steel jets + Cover | 74134A4300 | - | - | - |
| Infinity cabinet + Stainless steel jets + Cover | 74134AC300 | - | - | - |

We reserve the right to change, wholly or partially, the features of our products and the contents of this document, without prior notice

# Alexandria - Code 76307

White (44)
Ash Cabinet

## ACRYLIC COLOURS

N° 44 N° 59

## TECHNICAL FEATURES

| | |
|---|---|
| Size in cm (± 2cm) | 216 x 167 x 74 |
| Positions (Seats / Loungers) | 3 (1 / 2) |
| Jets | 26 |
| Maximum consumption in low amp - (A) at 230 V | 2.400 W - 10.4 A |

**Spa coding with options generated from the table on page 610.**

**Options:**
- **Audio Bluetooth 2.0**

| | Code | Standard Pack | Standard weight in kg | Standard volume in m³ |
|---|---|---|---|---|
| **ALEXANDRIA**<br>Ash cabinet + Stainless steel jets + Cover | 76307BA369 | - | - | - |

# Baia - Code 76173

White (44)
Ash cabinet

## ACRYLIC COLOURS

N° 44 N° 59

## TECHNICAL FEATURES

| | |
|---|---|
| Size in cm (± 2cm) | 216 x 216 x 90 |
| Positions (Seats / Loungers) | 5 (3/2) |
| Water Jets | 62 |
| Maximum consumption in low amp - (A) at 230 V | 3.800 W - 16.5 A |

**Spa coding with options generated from the table on page 610.**

**Options:**
- **Audio Bluetooth 2.0**

| | Code | Standard Pack | Standard weight in kg | Standard volume in m³ |
|---|---|---|---|---|
| **BAIA**<br>Ash cabinet + Stainless steel jets + Cover | 76173BA369 | - | - | - |

We reserve the right to change, wholly or partially, the features of our products and the contents of this document, without prior notice

# Malea - Code 76306

White (44)
Ash Cabinet

## TECHNICAL FEATURES

| | |
|---|---|
| Size in cm (± 2cm) | 198 x 198 x 74 |
| Positions (Seats / Loungers) | 5 (3 / 2) |
| Jets | 31 |
| Maximum consumption in low amp - (A) at 230 V | 2.650 W - 11.5 A |

**Spa coding with options generated from the table on page 610.**

**Options:**
- **Audio Bluetooth 2.0**

## ACRYLIC COLOURS

N° 44 N° 59

| | Code | Standard Pack | Standard weight in kg | Standard volume in m³ |
|---|---|---|---|---|
| **MALEA**<br>Ash cabinet + Stainless steel jets + Cover | 76306BA369 | - | - | - |

We reserve the right to change, wholly or partially, the features of our products and the contents of this document, without prior notice

# Swimspa Dual - Code 74238

| TECHNICAL FEATURES | |
|---|---|
| Size in cm (± 2cm) | 600 x 230 x 138 |
| Places (Seats/Loungers)<br>- Swimming area:<br>- Spa area: | 1 Vertical<br>4 (2/2) |
| Places (Seats/Loungers)<br>- Swimming area:<br>- Spa area: | 30 Jets<br>16+5 Turbo jets |
| Maximum consumption in low amp - (A) at 230 V | 9500 W - 41.3 A |

**Coding generated with the initial table on page 610.**

**Options:**
- **EcoSpa**
- **Audio Bluetooth 4.1**
- **Blue Connect Plus**
- **Rowing Kit code 74496**
- **Wi-Fi Spa Control**

ACRYLIC COLOURS

N° 44 N° 59 N° 46

| | Code | Standard Pack | Standard weight in kg | Standard volume in m³ |
|---|---|---|---|---|
| **DUAL** | | | | |
| Metallic structure without furniture + Stainless steel jets + LumiPlus + Cover | 74238A4320 | - | - | - |
| Coastal grey cabinet + Stainless steel jets + LumiPlus + Cover | 74238A1320 | - | - | - |
| Urban Grey cabinet + Stainless steel jets + LumiPlus + Cover | 74238AB320 | - | - | - |

# Swimspa Mediterranea - Code 64414

| TECHNICAL FEATURES | |
|---|---|
| Size in cm (± 2cm) | 500 x 230 x 138 |
| Positions (Seats / Loungers) | 4 (2 / 2) |
| Jets | 27 jets +<br>5 Turbo jets |
| Maximum consumption in low amp - (A) at 230 V | 7000 W - 30.5 A |

**Coding generated with the initial table on page 610.**

**Options:**
- **EcoSpa**
- **Audio Bluetooth 4.1**
- **Blue Connect Plus**
- **Wi-Fi Spa Control**

ACRYLIC COLOURS

N° 44 N° 59 N° 46

| | Code | Standard Pack | Standard weight in kg | Standard volume in m³ |
|---|---|---|---|---|
| **MEDITERRANEA** | | | | |
| Metallic structure without furniture + Stainless steel jets + LumiPlus + Cover | 64414A4320 | - | - | - |
| Coastal grey cabinet + Stainless steel jets + LumiPlus + Cover | 64414A1320 | - | - | - |
| Urban Grey cabinet + Stainless steel jets + LumiPlus + Cover | 64414AB320 | - | - | - |
| For Kit + Stainless steel jets + Colour LEDS + Digital Control Panel + Cover | 65353SE311 | - | - | - |

Model 65353 must be supplied with the compact kit, code 64972CE001.

We reserve the right to change, wholly or partially, the features of our products and the contents of this document, without prior notice

# Swimspa Creta - Code 67203

White (44)
Coastal Grey cabinet

White (44)
Urban Grey Cabinet

| TECHNICAL FEATURES | |
|---|---|
| Size in cm (± 1cm) | 400 x 230 x 138 |
| Positions (Seats / Loungers) | 4 (2 / 1 / 1) |
| Jets + blower nozzles | 54 jets + 4 Turbo jets |
| Maximum consumption in low amp - (A) at 230 V | 7000 W - 30.5 A |

**Coding generated with the initial table on page 610.**

**Options:**
- **EcoSpa**
- **Audio Bluetooth 4.1**
- **Blue Connect Plus**
- **Rowing Kit**
- **Wi-Fi Spa Control**

ACRYLIC COLOURS

N° 44 N° 59 N° 46

| | Code | Standard Pack | Standard weight in kg | Standard volume in m³ |
|---|---|---|---|---|
| **CRETA** | | | | |
| Metallic structure without furniture + Stainless steel jets + LumiPlus + Cover | 67203A4320 | - | - | - |
| Coastal grey cabinet + Stainless steel jets + LumiPlus + Cover | 67203A1320 | - | - | - |
| Urban grey cabinet + Stainless steel jets + LumiPlus + Cover | 67203AB320 | - | - | - |
| For Kit + Stainless steel jets + Colour LEDS + Digital Control Panel + Cover | 67587SE311 | - | - | - |

Model Creta must be supplied with the compact kit, code 64972CE001

# Swimspa Compact - Code 69128

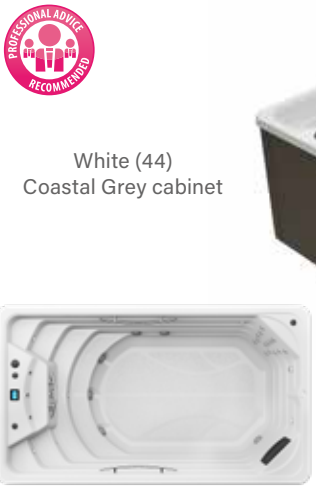

White (44)
Coastal Grey cabinet

White (44)
Urban Grey Cabinet

| TECHNICAL FEATURES | |
|---|---|
| Size in cm (± 2cm) | 400 x 230 x 138 |
| Positions (Seats / Loungers) | 1 Vertical |
| Jets + blower nozzles | 16+5 Turbo Jets |
| Maximum consumption in low amp - (A) at 230 V | 7000 W - 30.5 A |

**Coding generated with the initial table on page 610.**
**Options:**
- **EcoSpa**
- **Audio Bluetooth 4.1**
- **Blue Connect Plus**
- **Wi-Fi Spa Control**

ACRYLIC COLOURS

N° 44 N° 59 N° 46

| | Code | Standard Pack | Standard weight in kg | Standard volume in m³ |
|---|---|---|---|---|
| **COMPACT** | | | | |
| Metallic structure without furniture + Stainless steel jets + LumiPlus + Cover | 69128A4320 | - | - | - |
| Coastal grey cabinet + Stainless steel jets + LumiPlus + Cover | 69128A1320 | - | - | - |
| Urban grey cabinet + Stainless steel jets + LumiPlus + Cover | 69128AB320 | - | - | - |
| For Kit + Stainless steel jets + Colour LEDS + Digital Control Panel + Cover | 69129SE311 | - | - | - |

Model Compact must be supplied with the compact kit, code 64972CE001

We reserve the right to change, wholly or partially, the features of our products and the contents of this document, without prior notice

# Swimspa Lagoon - Code 74237

White (44)
Coastal Grey cabinet

Blue Marble (46)
Coastal grey cabinet

## TECHNICAL FEATURES

| | |
|---|---|
| Size in cm (± 1cm) | 400 x 230 x 138 |
| Positions (Seats / Loungers) | 1 vertical |
| Jets + blower nozzles | 12 |
| Maximum consumption in low amp - (A) at 230 V | 3400 W - 14.78 A |

**Coding generated with the initial table on page 610.**

**Options:**
- **EcoSpa**
- **Blue Connect Plus**
- **Fitness Kit and Swimming Kit**

## ACRYLIC COLOURS

N° 44 N° 59 N° 46

| | Code | Standard Pack | Standard weight in kg | Standard volume in m³ |
|---|---|---|---|---|
| **LAGOON** | | | | |
| Metallic structure without furniture + Stainless steel jets + LumiPlus + Cover | 74237A4300 | - | - | - |
| Coastal grey cabinet + Stainless steel jets + LumiPlus + Cover | 74237A1300 | - | - | - |

# Evolution 70 inground - Code 49722

White (44)

## TECHNICAL FEATURES

| Compact Kit: 41849CE000 | |
|---|---|
| Size in cm (± 2cm) | 233 x 233 x 90 |
| Positions (Seats / Loungers) | 5 (3 / 2) |
| Jets + blower nozzles | 56+16 |
| Maximum consumption in low amp - (A) at 230 V | 5200 W - 25.4 A |

## ACRYLIC COLOURS

N° 44 N° 59 N°65 N° 64 N° 46 N° 27

| | Code | Standard Pack | Standard weight in kg | Standard volume in m³ |
|---|---|---|---|---|
| **EVOLUTION 70** | | | | |
| Standard + Light + Digital control panel | 49722SE310 | - | - | - |
| Standard + Light + Digital control panel + Cover | 49722SE311 | - | - | - |

The Spa must be supplied with the filter kit, code 49849CE000

We reserve the right to change, wholly or partially, the features of our products and the contents of this document, without prior notice

# Thalassa E inground - Code 78678

Blue Marble (46)

## TECHNICAL FEATURES

| Compact Kit: 41993CE000 | |
|---|---|
| Size in cm (± 2cm) | 216 x 216 x 90 |
| Positions (Seats / Loungers) | 6 (5 / 1) |
| Jets + blower nozzles | 28+16 |
| Maximum consumption in low amp - (A) at 230 V | 3600 W - 15.7 A |

## ACRYLIC COLOURS

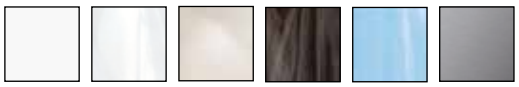

N° 44 N° 59 N°65 N° 64 N° 46 N° 27

| | Code | Standard Pack | Standard weight in kg | Standard volume in m³ |
|---|---|---|---|---|
| **THALASSA E** | | | | |
| Standard + Light + Digital control panel | 78678SE310 | - | - | - |
| Standard + Light + Digital control panel + Cover | 78678SE311 | - | - | - |

The Spa must be supplied with the filter kit, code 41993CE000 or 41993CE001.

Spa cover sold separately. See section "Spa accessories".

# Ronda 30 - Code 49859

White (44)

## ACRYLIC COLOURS

N° 44 | N° 59 | N°65 | N° 64 | N° 46 | N° 27

## TECHNICAL FEATURES

| Compact Kit: 41993CE000 | |
|---|---|
| Size in cm (± 2cm) | Ø 205 (± 2 cm) |
| Positions (Seats / Loungers) | 5 (5 / 0) |
| Jets + blower nozzles | 20 + 10 |
| Maximum consumption in low amp - (A) at 230 V | 3600 W - 15.7 A |

| | Code | Standard Pack | Standard weight in kg | Standard volume in m³ |
|---|---|---|---|---|
| **RONDA 30** | | | | |
| Standard + Light + Digital control panel | 49859SE310 | - | - | - |
| Standard + Light + Digital control panel + Cover | 49859SE311 | - | - | - |

The Spa must be supplied with the filter kit. code 41993CE000 or 41993CE001.

We reserve the right to change, wholly or partially, the features of our products and the contents of this document, without prior notice

COMPACT FILTRATION HOUSING FOR SPAS

# Compact kit

## for Thalassa, Evolution 70 and Ronda 30

| | Code | Standard Pack | Standard weight in kg | Standard volume in m³ |
|---|---|---|---|---|
| Compact kit | 41993CE000 | - | - | - |
| Compact kit | 41993CE001 | - | - | - |
| Compact kit | 41993 | - | - | - |

### TECHNICAL FEATURES

| Code | Oxynator | Digital control panel* | Compact weight | Assembly volume | Max. spa volume | Massage pump |
|---|---|---|---|---|---|---|
| 41993CE000 | | - | 60 kg | 2.05 m³ | 1000 l | 2.2 kW |
| 41993CE001 | • | - | | | | |

| Code | Filter (mm) | Filtration pump | Blower pump | Electric heater | Voltage | Power requirements | Length x width x height |
|---|---|---|---|---|---|---|---|
| 41993 | 500 | 0.6 kW 7000 l/h | 0.9 kW | 3 kW | 230 V or 400 V III | 3852 W / 16.7 A* | 115 x 75 x 105 mm |

Consumption in Low Amp at 230 V.
* In the Spa + Compact Kit option, the digital control option must be selected.

# Compact kit

## for Evolution 70 inground

| | Code | Standard Pack | Standard weight in kg | Standard volume in m³ |
|---|---|---|---|---|
| Compact kit | 41849 | - | - | - |

### TECHNICAL FEATURES

| Code | Oxynator | Digital control panel* | Chromotherapy | Compact weight | Assembly volume | Max. spa volume | Massage pump |
|---|---|---|---|---|---|---|---|
| 41849 | Optional | - | • | 70 kg | 2.05 m³ | 1610 l | 2.2 kW x 2 |

* In the Spa + Compact Kit option, the digital control option must be selected.

# Compact kit

## for Swimspa Mediterranea

| | Code | Standard Pack | Standard weight in kg | Standard volume in m³ |
|---|---|---|---|---|
| Compact kit | 64972CE001 | - | - | - |
| Compact kit | 64972 | - | - | - |

### TECHNICAL FEATURES

| Code | Oxynator | Digital control panel* | Chromotherapy | Compact weight | Assembly volume | Max. spa volume | Massage pump |
|---|---|---|---|---|---|---|---|
| 64972CE001 | • | - | • | 70 kg | 2.05 m³ | 8500 l | 3 x 2.2 kW / 3hp |

| Code | Filter (mm) | Filtration pump | Electric heater | Voltage | Power requirements | Length x width x height |
|---|---|---|---|---|---|---|
| 64972 | 500 | 0.6 kW 7000 l/h | 3 kW | 230 V or 400 V III | 7352 W / 31.9 A* | 114 x 100 x 112 mm |

Consumption in Low Amp at 230 V.
* In the Spa + Compact Kit option, the digital control option must be selected.

We reserve the right to change, wholly or partially, the features of our products and the contents of this document, without prior notice

# Covers for spas

Portable spa cover

## DESCRIPTION

| | Code | Standard Pack | Standard weight in kg | Standard volume in m³ |
|---|---|---|---|---|
| THALASSA E spa cover | 65977 | 1 | 17 | 0.40 |
| EVOLUTION 70 inground spa cover | 32690 | 1 | 16 | 0.36 |
| RONDA 30 spa cover | 51288 | 1 | 15 | 0.27 |

# Cover Stand

## DESCRIPTION

Metal Stand for simple handling of the cover.

| | Code | Standard Pack | Standard weight in kg | Standard volume in m³ |
|---|---|---|---|---|
| Cover Stand | 28462 | 1 | 10 | 0.118 |

# Spa access steps

| | Code | Standard Pack | Standard weight in kg | Standard volume in m³ |
|---|---|---|---|---|
| Basic staircase coastal grey | 60194 | 1 | 5 | 0.07 |
| Swimspa staircase | 57000CL01 | 1 | 35 | 0.59 |
| **Synthetic wood staircase** | | | | |
| In Graphite | 42002CL0K | 1 | 15 | 0.09 |
| In Thunder | 42002CL0R | 1 | 15 | 0.09 |
| In Creek | 42002CL0T | 1 | 15 | 0.09 |
| In Butterfly | 42002CL0W | 1 | 15 | 0.09 |

42002CL0K

60194

57000CL01

42002CL0R

42002CL0T

42002CL0W

# Portable spa handrail holder

| | Code | Standard Pack | Standard weight in kg | Standard volume in m³ |
|---|---|---|---|---|
| Portable spa handrail holder | 60226 | 2 | 8 | 0.95 |

# Clim8Zone Heat Pump

| | Code | Standard Pack | Standard weight in kg | Standard volume in m³ |
|---|---|---|---|---|
| Heat Pump* | 73001HP | 1 | 50 | 0.175 |

*Available for the spas with the following measures: 216 x 216 x 90 cm.
Please consult with BackOffice for models that are outside the presented sizes.

# Spa filter cartridge cleaner

| | Code | Standard Pack | Standard weight in kg | Standard volume in m³ |
|---|---|---|---|---|
| Spa filter cartridge cleaner | 60197 | 1 | 2 | 0.04 |

# Programmable digital thermostat

## DESCRIPTION

To operate ON/OFF contactor.

| | Code | Standard Pack | Standard weight in kg | Standard volume in m³ |
|---|---|---|---|---|
| | 11288 | 20 | 0.5 | 0.003 |

# Electric press button

## DESCRIPTION

230 V 50 Hz.

| | Code | Standard Pack | Standard weight in kg | Standard volume in m³ |
|---|---|---|---|---|
| | 74467 | 1 | 1.5 | 0.003 |

# Electropneumatic equipment

## DESCRIPTION

With two switches. Up to 1.47 kW (2HP).

| | Code | Standard Pack | Standard weight in kg | Standard volume in m³ |
|---|---|---|---|---|
| | 04053 | 2 | 4.0 | 0.028 |

# Pneumatic switch

## DESCRIPTION

For starting and stopping massage and hydromassage functions.

| | Code | Standard Pack | Standard weight in kg | Standard volume in m³ |
|---|---|---|---|---|
| Pneumatic switch | 04050 | 25 | 1.0 | 0.028 |
| Pneumatic switch and presostat | 11290 | 6 | 0.5 | 0.028 |
| Pneumatic presostat | 11291 | 12 | 1.0 | 0.028 |

# 2 ½" adjustable jet

## DESCRIPTION

Regulates proportion of air-water outlet. 50 mm diameter water inlet and 32 mm air inlet. Flow: 4 m³/hour. Pressure 0.8 a.t.m.

| Code | Standard Pack | Standard weight in kg | Standard volume in m³ |
|---|---|---|---|
| 32641 | 12 | 7.625 | 0.028 |

# 2" threaded jet

## DESCRIPTION

Water inlet diameter of 50 mm and air inlet diameter of 32 mm. Flow rate of 4 m³/hour. Atm pressure of 0.8.

| Code | Standard Pack | Standard weight in kg | Standard volume in m³ |
|---|---|---|---|
| 33586 | 12 | 7.625 | 0.028 |

# 2" jet thread for liner

## DESCRIPTION

Water inlet diameter of 50 mm and air inlet diameter of 32 mm. Flow rate of 4 m³/hour Atm pressure of 0.8.

| Code | Standard Pack | Standard weight in kg | Standard volume in m³ |
|---|---|---|---|
| 70532 | 12 | 7.625 | 0.028 |

# 2" main drain

## DESCRIPTION

With elbow for gluing to Ø 50 mm pipe.

| Code | Standard Pack | Standard weight in kg | Standard volume in m³ |
|---|---|---|---|
| 04042 | 15 | 4.8 | 0.028 |

# Adjustable air inlet

## DESCRIPTION

1"for air regulation to Venturi system for jet function.

| Code | Standard Pack | Standard weight in kg | Standard volume in m³ |
|---|---|---|---|
| 04045 | 25 | 6.0 | 0.028 |

# Adjustable silent air inlet

## DESCRIPTION

Silent Venturi for jet air flow control. Air intake is through embedded part. Attaches to air distributor code 33937.

| Code | Standard Pack | Standard weight in kg | Standard volume in m³ |
|---|---|---|---|
| 33938 | 25 | 8.5 | 0.028 |

# 5 outlet air distributor

## for Venturi system

## DESCRIPTION

5 outlet air distributor for gluing to Venturi system with code 33938. Outlets for clamping a flexible hosepipe of 10 mm inner diameter.

| Code | Standard Pack | Standard weight in kg | Standard volume in m³ |
|---|---|---|---|
| 33937 | 25 | 8.5 | 0.028 |

# 6 outlet air distributor

## for Venturi system

## DESCRIPTION

6 outlet air distributor  to attach to pipes with a 10 mm inner diameter and glue to 15 mm pipes.

| Code | Standard Pack | Standard weight in kg | Standard volume in m³ |
|---|---|---|---|
| 33936 | 25 | 8.5 | 0.028 |

# 10 outlet air distributor

## DESCRIPTION

10 outlet air distributor  to attach to pipes with a 10 mm inner diameter and glue to 50 mm pipes.

| Code | Standard Pack | Standard weight in kg | Standard volume in m³ |
|---|---|---|---|
| 35346 | 25 | 8.5 | 0.028 |

# 4 water outlet manifold

## DESCRIPTION

Manifold for gluing to 50 mm pipe, 4 outlets for clamping a hosepipe of 20 mm inner diameter.

| | Code | Standard Pack | Standard weight in kg | Standard volume in m³ |
|---|---|---|---|---|
| | 33934 | 25 | 8.5 | 0.028 |

# 8 water outlet manifold

## DESCRIPTION

Manifold for gluing to 50 mm pipe, 8 outlets for clamping a hosepipe of 20 mm inner diameter.

| | Code | Standard Pack | Standard weight in kg | Standard volume in m³ |
|---|---|---|---|---|
| | 33935 | 25 | 8.5 | 0.028 |

# Threaded blower nozzle

## DESCRIPTION

For air distribution into the SPA from the blowers. Flow rate 5.4 to 7.5 m³/h.

| | Code | Standard Pack | Standard weight in kg | Standard volume in m³ |
|---|---|---|---|---|
| White plastic front panel | 27602 | 80 | 1.6 | 0.03 |
| Stainless steel front panel | 43440 | 80 | 1.6 | 0.03 |

# Blower nozzle for gluing

## DESCRIPTION

For air distribution into the SPA from the blowers. Flow rate 5.4 to 7.5 m³/h.

| | Code | Standard Pack | Standard weight in kg | Standard volume in m³ |
|---|---|---|---|---|
| White plastic front panel | 28460 | 80 | 1.6 | 0.03 |
| Stainless steel front panel | 43441 | 80 | 1.6 | 0.03 |

# Blower nozzle lateral outlet 3/8"

## DESCRIPTION

For air distribution into the SPA from the blowers. Flow rate 5.4 to 7.5 m³/h.

| | Code | Standard Pack | Standard weight in kg | Standard volume in m³ |
|---|---|---|---|---|
| White plastic front panel | 34318 | 80 | 1.6 | 0.03 |
| Stainless steel front panel | 43442 | 80 | 1.6 | 0.03 |

# 2" return unit

## DESCRIPTION

For return line and massage.

| | Code | Standard Pack | Standard weight in kg | Standard volume in m³ |
|---|---|---|---|---|
| | 04034 | 25 | 5.0 | 0.028 |

# Pneumatic push button

## DESCRIPTION

For starting and stopping massage and hydromassage functions.

| | Code | Standard Pack | Standard weight in kg | Standard volume in m³ |
|---|---|---|---|---|
| For max. 15 m | 04047 | 20 | 0.5 | 0.028 |
| For max. 7 m simple | 04048 | 40 | 1.6 | 0.028 |
| For max. 7 m simple, with thread | 09667 | 20 | 0.5 | 0.028 |

# Plastic tube

## DESCRIPTION

For pneumatic signal from press button to switch. Inner Ø 3.5 mm.

| | Code | Standard Pack | Standard weight in kg | Standard volume in m³ |
|---|---|---|---|---|
| | 04054 | 50 | 3.33 | 0.006 |

**Stainless steel accessories should not be used in pools with salt electrolysis systems**

# Rotating jet

## DESCRIPTION

Flow rate 2 to 2.5 m³/h.

| Code | Standard Pack | Standard weight in kg | Standard volume in m³ |
|---|---|---|---|
| 20297 | 25 | 3.33 | 0.028 |

# Twin rotating jet

## DESCRIPTION

Flow rate 2 to 2.5 m³/h.

| Code | Standard Pack | Standard weight in kg | Standard volume in m³ |
|---|---|---|---|
| 20296 | 25 | 3.83 | 0.028 |

# Rotating jet housing

| Code | Standard Pack | Standard weight in kg | Standard volume in m³ |
|---|---|---|---|
| 20299 | 15 | 3.33 | 0.028 |

# Jet housing for linear pool

| Code | Standard Pack | Standard weight in kg | Standard volume in m³ |
|---|---|---|---|
| 63144 | 12 | 3.33 | 0.028 |

# 2 ½" wall conduit for rotating jet

## DESCRIPTION

Made up of: The jet body, 20 cm wall conduit, niche, threaded fitting, front body. Jet not included.

Flow rate 5 m³/h at 1 bar.

| Code | Standard Pack | Standard weight in kg | Standard volume in m³ |
|---|---|---|---|
| 20295 | 4 | 4 | 0.018 |

**Chrome accessories only suitable for tubs that do not use any chemical treatment. Not suitable for pools.**

**Pool Jet accessories are designed for pools that have a hydromassage section.**

# Pool Jet 1 Directional Jet

## DESCRIPTION

Flow rate 2.4 to 3.6 m³/h. Accessories compatible with 2½" handrail for Pool Jet.

| | Code | Standard Pack | Standard weight in kg | Standard volume in m³ |
|---|---|---|---|---|
| Stainless steel finish* | 63148 | 25 | 3.83 | 0.028 |
| White finish | 63149 | 25 | 3.83 | 0.028 |

# Pool Jet 1 Rotating Jet

## DESCRIPTION

Flow rate 2.4 to 3.6 m³/h. Accessories compatible with 2½" handrail for Pool Jet.

| | Code | Standard Pack | Standard weight in kg | Standard volume in m³ |
|---|---|---|---|---|
| Stainless steel finish* | 63150 | 25 | 3.83 | 0.028 |
| White finish | 63151 | 25 | 3.83 | 0.028 |

# Pool Jet 2 Rotating Jets

## DESCRIPTION

Flow rate 2.4 to 3.6 m³/h. Accessories compatible with 2½" handrail for Pool Jet.

| | Code | Standard Pack | Standard weight in kg | Standard volume in m³ |
|---|---|---|---|---|
| Stainless steel finish* | 63152 | 25 | 3.83 | 0.028 |
| White finish | 63153 | 25 | 3.83 | 0.028 |

# Pool Jet Rotating Beehive

## DESCRIPTION

Flow rate 2.4 to 3.6 m³/h. Accessories compatible with 2½" handrail for Pool Jet.

| | Code | Standard Pack | Standard weight in kg | Standard volume in m³ |
|---|---|---|---|---|
| Stainless steel finish* | 63154 | 25 | 3.83 | 0.028 |
| White finish | 63155 | 25 | 3.83 | 0.028 |

# Wall conduit for Pool Jet

## DESCRIPTION

Made up of: The jet Straight body (20 mm Air x 32 mm Water), 20 cm wall conduit, niche, front body. Jet not included.

| | Code | Standard Pack | Standard weight in kg | Standard volume in m³ |
|---|---|---|---|---|
| | 63146 | 4 | 4 | 0.018 |

**Chrome accessories only suitable for tubs that do not use any chemical treatment. Not suitable for pools.**

# 1 ½" main drain

## DESCRIPTION

With elbow for gluing Ø 50 mm pipe.

| | Code | Standard Pack | Standard weight in kg | Standard volume in m³ |
|---|---|---|---|---|
| Chrome-plated bronze front panel | 04104 | 3 | 7.5 | 0.028 |

# Adjustable air inlet

## DESCRIPTION

¾" to control air massage to Venturi system for jet function.

| | Code | Standard Pack | Standard weight in kg | Standard volume in m³ |
|---|---|---|---|---|
| Chrome-plated bronze front panel | 04108 | 10 | 9.0 | 0.028 |
| White plastic front panel | 04110 | 10 | 3.0 | 0.028 |

# Pneumatic push button

## DESCRIPTION

For starting and stopping massage and hydromassage functions.

| | Code | Standard Pack | Standard weight in kg | Standard volume in m³ |
|---|---|---|---|---|
| Chrome-plated bronze front panel | 04111 | 10 | 6.0 | 0.028 |
| White plastic front panel | 04113 | 12 | 6.0 | 0.028 |

# Blower Inlet

## DESCRIPTION

For minispa air distribution from the blower. 1 ½" thread.

| | Code | Standard Pack | Standard weight in kg | Standard volume in m³ |
|---|---|---|---|---|
| Chrome-plated bronze front panel | 04114 | 20 | 7.5 | 0.028 |

**Chrome accessories only suitable for tubs that do not use any chemical treatment. Not suitable for pools.**

# 1¼" jet with adaptor to water return

## DESCRIPTION

Jet with adaptor to return water to pipe. Also adaptor to connect to water return and air circulation pipe, solvent for inner Ø 32 mm, directional.

| | Code | Standard Pack | Standard weight in kg | Standard volume in m³ |
|---|---|---|---|---|
| Chrome-plated bronze front panel | 04095 | 8 | 12.0 | 0.028 |
| White plastic front panel | 04097 | 12 | 12.0 | 0.028 |

# 1¼" jet

## DESCRIPTION

With adaptor to connect to return water pipe and Venturi system to glue to Ø 32 mm pipe, directional.

| | Code | Standard Pack | Standard weight in kg | Standard volume in m³ |
|---|---|---|---|---|
| Chrome-plated bronze front panel | 04092 | 8 | 10.0 | 0.028 |
| White plastic front panel | 04094 | 24 | 5.0 | 0.028 |

# 1¼" return inlet

| | Code | Standard Pack | Standard weight in kg | Standard volume in m³ |
|---|---|---|---|---|
| Built in chrome brass | 04100 | 4 | 15.0 | 0.028 |
| Built in white plastic | 04103 | 12 | 3.5 | 0.028 |

AIR BLOWERS

# Continuous operation

## lateral turbo blower pump

### DESCRIPTION

Air pump designed for spas, hydromassage tubs and similar which produces a constant stream of air bubbles at medium and high air volume levels. It can also be used to stir up the filter bed, for example in backwash cycles where a low intensity air current is required. The filter casing and impeller are made from an injected aluminium alloy whilst the motor spindle is manufactured from stainless steel, with the impeller dynamically balanced and directly adapted to the spindle. The motors, 2 single phase or 3 phase for continuous use, are made from steel in compliance with CEI 2/3 1988 regulations, and feature IP54 external protection and class-F insulation. The pumps can be mounted horizontally or vertically. Moreover, since there is no contact between the mobile parts and the pump static discharges, neither lubrication nor maintenance is necessary and it also doesn't cause wear on the parts.

The turbines have a maximum working temperature of 40ºC. Do not use in conjunction with aggressive, inflammable or explosive gases.

| Model | Code | Frequency (Hz) | Power supply (V) | Phase | Flow rate ($m^3/h$) | Maximum pressure (mbar) | Standard weight (kg) | Standard volume ($m^3$) |
|---|---|---|---|---|---|---|---|---|
| Blower 0.4 kW | 33970-2450 | 50 | Δ 200-240 Y 345-415 | 3 | 80 | 130 | 10 | 0.045 |
| Blower 0.5 kW | | 60 | Δ 220-275 Y 380-480 | 3 | 98 | 170 | | |
| Blower 0.85 kW | 35388-2450 | 50 | 200-240 | 1 | 145 | 160 | 17 | 0.059 |
| Blower 0.95 kW | | 60 | 200-240 | 1 | 175 | 160 | | |
| Blower 0.85 kW | 35387-2450 | 50 | Δ 200-240 Y 345-415 | 3 | 145 | 160 | 16 | 0.045 |
| Blower 0.95 kW | | 60 | Δ 220-275 Y 380-480 | 3 | 175 | 160 | | |
| Blower 1.3 kW | 31090-2450 | 50 | 200-240 | 1 | 210 | 170 | 23 | 0.059 |
| Blower 1.5 kW | | 60 | 200-240 | 1 | 255 | 140 | | |
| Blower 1.3 kW | 31091-2450 | 50 | Δ 200-240 Y 345-415 | 3 | 210 | 170 | 22 | 0.059 |
| Blower 1.5 kW | | 60 | Δ 220-275 Y 380-480 | 3 | 255 | 140 | | |
| Blower 1.5 kW | 33971-2450 | 50 | 200-240 | 1 | 210 | 220 | 24 | 0.064 |
| Blower 1.75 kW | | 60 | 200-240 | 1 | 255 | 220 | | |
| Blower 1.6 kW | 31092-2450 | 50 | Δ 200-240 Y 345-415 | 3 | 210 | 220 | 23 | 0.064 |
| Blower 2.1 kW | | 60 | Δ 220-275 Y 380-480 | 3 | 255 | 220 | | |
| Blower 1.6 kW 2V | 35389-2450 | 50 | Δ 200-240 Y 345-415 | 3 | 150 | 300 | 25 | 0.087 |
| Blower 2.06 kW 2V | | 60 | Δ 220-275 Y 380-480 | 3 | 180 | 310 | | |
| Blower 2.2 kW | 31093-2450 | 50 | Δ 200-240 Y 345-415 | 3 | 318 | 230 | 30 | 0.097 |
| Blower 2.55 kW | | 60 | Δ 220-275 Y 380-480 | 3 | 376 | 220 | | |
| Blower 3.0 kW 2V | 31094-2450 | 50 | Δ 200-240 Y 345-415 | 3 | 230 | 410 | 40 | 0.126 |
| Blower 3.45 kW 2V | | 60 | Δ 220-275 Y 380-480 | 3 | 275 | 400 | | |
| Blower 3.0 kW | 31095-2450 | 50 | Δ 200-240 Y 345-415 | 3 | 318 | 280 | 36 | 0.097 |
| Blower 3.45 kW | | 60 | Δ 220-275 Y 380-480 | 3 | 376 | 280 | | |
| Blower 4.3 kW 2V | 31096-2450 | 50 | Δ 345-415 Y 600-720 | 3 | 520 | 600 | 54 | 0.217 |
| Blower 4.8 kW 2V | | 60 | Δ 380-480 Y 660-720 | 3 | 385 | 320 | | |
| Blower 5.5 kW | 31097-2450 | 50 | Δ 345-415 Y 600-720 | 3 | 530 | 320 | 63 | 0.16 |
| Blower 6.3 kW | | 60 | Δ 380-480 Y 660-720 | 3 | 620 | 340 | | |
| Blower 5.5 kW 2V | 33972-2450 | 50 | Δ 345-415 Y 600-720 | 3 | 320 | 515 | 66 | 0.201 |
| Blower 6.3 kW 2V | | 60 | Δ 380-480 Y 660-720 | 3 | 385 | 530 | | |
| Blower 7.5 kW | 31098-2450 | 50 | Δ 345-415 Y 600-720 | 3 | 530 | 400 | 66 | 0.16 |
| Blower 8.6 kW | | 60 | Δ 380-480 Y 660-720 | 3 | 620 | 400 | | |
| Blower 11 kW 2V | 33973-2450 | 50 | Δ 345-415 Y 600-720 | 3 | 520 | 600 | 104 | 0.353 |
| Blower 12.6 kW 2V | | 60 | Δ 380-480 Y 660-720 | 3 | 620 | 600 | | |
| Blower 12.5 kW | 33974-2450 | 50 | Δ 345-415 Y 600-720 | 3 | 1050 | 270 | 116 | 0.353 |
| Blower 14.5 kW | | 60 | Δ 380-480 Y 660-720 | 3 | 1250 | 260 | | |

AIR BLOWERS

# Intermittent operation

## air blower, 900 W

| | Code | Standard Pack | Standard weight in kg | Standard volume in m³ |
|---|---|---|---|---|
| 0.90 kW flow 54 m³/h at 1.5 m water head | 19289 | 1 | 3.5 | 0.028 |

# Water pump

## DESCRIPTION

ABS (25%) and fibreglass (75%) housing. A 0.37 kW (0.5 hp) motor. IP-55 electrical connection rating of 24 V 220 V 1~ 50Hz . 2" male suction connection. 1½" male return connection.

| | Code | Standard Pack | Standard weight in kg | Standard volume in m³ |
|---|---|---|---|---|
| Water pump | 04091 | 1 | 6.0 | 0.016 |

## TECHNICAL FEATURES

| Water head | m³/h |
|---|---|
| 2 | 16.5 |
| 4 | 14.8 |
| 6 | 12.6 |
| 8 | 10 |
| 10 | 7 |

# Intermittent operation

## air blower

| | Code | Standard Pack | Standard weight in kg | Standard volume in m³ |
|---|---|---|---|---|
| **At 1 m water head** | | | | |
| 0.74 kW, Flow 65 m³/h | 06862 | 1 | 3.5 | 0.028 |
| 1.10 kW, Flow 133 m³/h | 06863 | 1 | 3.5 | 0.028 |

AIR BLOWERS

# Cala Pump

## DESCRIPTION

Centrifugal pump for spas, backwashes and other applications.

- Pump body manufactured in polypropylene reinforced with fibreglass, resistant to pool chemical products thus guaranteeing long and excellent duration.
- Turbine in Noryl.
- Graphite and ceramic mechanical seal.
- AISI 316L stainless steel motor spindle.
- Enclosed motor, completely silent, with IP-55 protection at 2850 r.p.m. Single phase power voltage at 230V-50Hz or triphase at 230/400-50Hz.
- Versions from 1.5 to 4.5 HP.
- Suction and return connections for gluing hoses included with the pump.
- Suction and return at Ø63.

| | Code | Standard Pack | Standard weight in kg | Standard volume in $m^3$ |
|---|---|---|---|---|
| Single phase 1.1 kW Cala Pump | CA150M | 1 | 15.0 | 0.058 |
| Tri phase 1.1 kW Cala Pump | CA150T | 1 | 15.0 | 0.058 |
| Single phase 1.5 kW Cala Pump | CA200M | 1 | 16.5 | 0.058 |
| Tri phase 1.5 kW Cala Pump | CA200T | 1 | 16.5 | 0.058 |
| Single phase 2.2 kW Cala Pump | CA300M | 1 | 19.5 | 0.058 |
| Tri phase 2.2 kW Cala Pump | CA300T | 1 | 19.5 | 0.058 |
| Single phase 2.9 kW Cala Pump | CA400M | 1 | 22.5 | 0.058 |
| Tri phase 3.3 kW Cala Pump | CA450T | 1 | 22.5 | 0.058 |

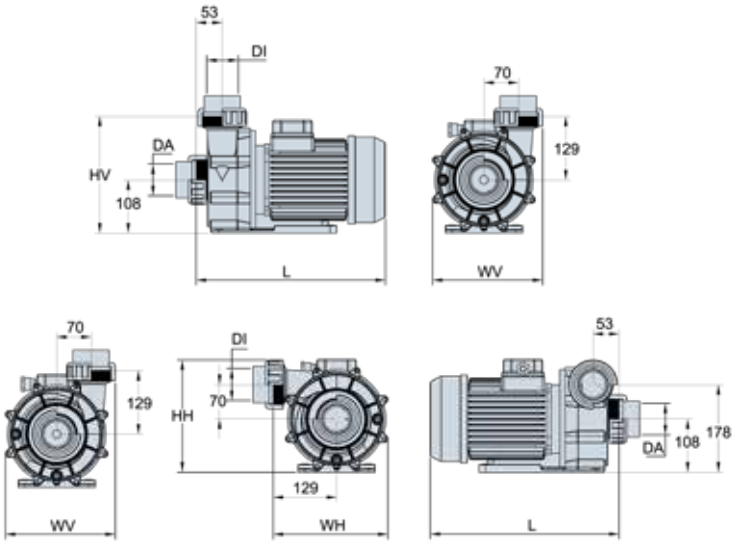


## TECHNICAL FEATURES

| Code | Power | | Size | | | | | | |
|---|---|---|---|---|---|---|---|---|---|
| | kW | HP | L | WV | HV | WH | HH | DA | DI |
| CA150M | 1.1 | 1.5 | 350 | 225 | 237 | 235 | 228 | Ø63 | Ø63 |
| CA150T | | | | | | | | | |
| CA200M | 1.5 | 2.0 | 365 | 225 | 237 | 235 | 228 | Ø63 | Ø63 |
| CA200T | | | | | | | | | |
| CA300M | 2.2 | 3.0 | 385 | 225 | 237 | 235 | 228 | Ø63 | Ø63 |
| CA300T | | | | | | | | | |
| CA400M | 2.9 | 4.0 | 415 | 225 | 237 | 235 | 228 | Ø63 | Ø63 |
| CA450T | 3.3 | 4.5 | | | | | | | |

The sauna pictures do not show the standard product (some accessories can be included from table Accessories Summary).

Please note the codes of the accessories when ordering.

- The benefits of an AstralPool sauna range from muscle relaxation to sweat stimulation thanks to their hot and dry environment (relative humidity between 20% and 50%).
- AstralPool saunas are made from prefabricated panels with interior insulation in mineral wool and aluminium.
- The wall coating is covered with pre-treated wood that has been fired and dried to last for many years.

2 seats, code 70470-70471

4 seats, code 70439-70442

The Miramonte sauna can be made to order in the following woods: spruce, thermo Aspen, Canadian spruce and red cedar.

# Miramonte sauna

## DESCRIPTION

Miramonte sauna reflects the excellence of a Finnish sauna formed of high-quality white pinewood vertical panels and abachi timber flooring. The entire front panel of the Miramonte sauna is glazed to showcase the LED lighting inside. Also includes 2 benches with abachi headrests and a heater adapted to each size.

| Dimensions (mm) | Code | Standard Pack | Standard weight in kg | Standard volume in m³ |
|---|---|---|---|---|
| **Saunas** | | | | |
| 200 x 150 x 210 | 70470 | - | - | - |
| 200 x 200 x 210 | 70471 | - | - | - |
| 250 x 200 x 210 | 70439 | - | - | - |
| 250 x 250 x 210 | 70440 | - | - | - |
| 300 x 250 x 210 | 70441 | - | - | - |
| 300 x 300 x 210 | 70442 | - | - | - |
| **Accessories** | | | | |
| Stainless steel accessories set | 70443 | un. | - | - |
| Set of decorative salt elements | 70444 | un. | - | - |
| Outside wall finished with vertical timber panels | 70447 | metre length | - | - |
| Stone-based decorative wall protection | 70456 | un. | - | - |
| Remote control kit for RGB colours | 70457 | un. | - | - |

## TECHNICAL FEATURES

| Code | Type | Dimensions (cm) | Heating (kW) | Control unit |
|---|---|---|---|---|
| 70470 | Miramonte sauna | 200 x 150 x 210 | 7 kW 230/400V 3~ | Touchscreen / Exterior |
| 70471 | Miramonte sauna | 200 x 200 x 210 | 7 kW 230/400V 3~ | Touchscreen / Exterior |
| 70439 | Miramonte sauna | 250 x 200 x 210 | 9 kW 230/400V 3~ | Touchscreen / Exterior |
| 70440 | Miramonte sauna | 250 x 250 x 210 | 9 kW 230/400V 3~ | Touchscreen / Exterior |
| 70441 | Miramonte sauna | 300 x 250 x 210 | 10.8 kW 230/400V 3~ | Touchscreen / Exterior |
| 70442 | Miramonte sauna | 300 x 300 x 210 | 13.5 kW 230/400V 3~ | Touchscreen / Exterior |

# Classic Select sauna

## DESCRIPTION

The Classic sauna is designed with vertical panels and spruce wood flooring. It has a timber-framed glass door, two seats with a backrest against the wall and an abachi headrest. Includes: Wooden accessories kit, ergonomic seating, rounded backrest, heater with premium protection.

**The Classic sauna can be made to order in the following woods: white pine, thermo Aspen, Canadian spruce and red cedar.**

**Optional: glass panel follow-on from door.**

| Dimensions (mm) | Code | Standard Pack | Standard weight in kg | Standard volume in $m^3$ |
|---|---|---|---|---|
| **Saunas** | | | | |
| 150 x 150 x 210 | 70431 | - | - | - |
| 200 x 150 x 210 | 70432 | - | - | - |
| 200 x 200 x 210 | 70433 | - | - | - |
| 250 x 200 x 210 | 70455 | - | - | - |
| 250 x 250 x 210 | 70434 | - | - | - |
| 300 x 250 x 210 | 70436 | - | - | - |
| 300 x 300 x 210 | 70437 | - | - | - |
| 400 x 300 x 210 | 70438 | - | - | - |
| **Accessories** | | | | |
| Stainless steel accessories set | 70443 | un. | - | - |
| Set of decorative salt elements | 70444 | un. | - | - |
| Remote control kit for RGB LED colours | 70445 | un. | - | - |
| Touchscreen control unit for sauna heater | 70446 | un. | - | - |
| Outside wall finished with vertical timber panels | 70447 | metre length | - | - |
| Roof extension | 70448 | $m^2$ | - | - |
| Tinted/transparent glass window | 70449 | $m^2$ | - | - |
| Concealed heater for sauna up to 300 x 250 cm | 70450 | un. | - | - |
| Concealed heater for sauna more than 300 x 250 cm | 70451 | un. | - | - |
| Extra wall for concealed heater | 70452 | metre length | - | - |
| Aroma dosing system | 70453 | un. | - | - |

## TECHNICAL FEATURES

| Code | Type | Dimensions (cm) | Heating (kW) | Control unit |
|---|---|---|---|---|
| 70431 | Classic sauna | 150 x 150 x 210 | 4.5kW 230/400 3~ | Exterior |
| 70432 | Classic sauna | 200 x 150 x 210 | 6kW 230/400 3~ | Exterior |
| 70433 | Classic sauna | 200 x 200 x 210 | 6kW 230/400 3~ | Exterior |
| 70455 | Classic sauna | 250 x 200 x 210 | 8kW 230/400 3~ | Exterior |
| 70434 | Classic sauna | 250 x 250 x 210 | 9kW 230/400 3~ | Exterior |
| 70436 | Classic sauna | 300 x 250 x 210 | 10.5kW 230/400 3~ | Exterior |
| 70437 | Classic sauna | 300 x 300 x 210 | 13.5kW 230/400 3~ | Exterior |
| 70438 | Classic sauna | 400 x 300 x 210 | 16.5kW 230/400 3~ | Exterior |

# St. Moritz sauna

**The St. Moritz sauna can be made to order in the following woods:**

**- Standard wood: Hemlock Playwood**
**- Bench wood: Abichi**

## DESCRIPTION

- Hemlock playwood panels 14 mm.
- Console benches and backrest of Abichi 21 mm.
- Secured transparent glass 8 mm.
- Wall mounted Harvia sauna heater.
- Outfoor touch control panel.
- Led light Warm White 3000 K.

| Dimensions (mm) | Code | Standard Pack | Standard weight in kg | Standard volume in m³ |
|---|---|---|---|---|
| **Saunas** | | | | |
| 180 x 180 x 210 | 72908 | - | - | - |
| 220 x 220 x 210 | 72909 | - | - | - |
| 260 x 220 x 210 | 72910 | - | - | - |
| 300 x 250 x 210 | 72911 | - | - | - |
| **Accessories** | | | | |
| Stainless steel accessories set | 70443 | un. | - | - |
| RGB Led lighting kit with remote control | 70445 | un. | - | - |
| Salt decorative elements set | 70444 | lin.m | - | - |
| Hidden heater | 70450 | un. | - | - |
| Additional Wall for hidden heater | 70452 | lin.m | - | - |

## TECHNICAL FEATURES

| Code | Dimensions (cm) | Light | Control Unit | Heater |
|---|---|---|---|---|
| 72908 | 180 x 180 x 210 | Led White / RGB | Touchscreen Exterior | 6 kW 230 / 400 3~ |
| 72909 | 220 x 220 x 210 | Led White / RGB | Touchscreen Exterior | 8 kW 230 / 400 3~ |
| 72910 | 260 x 220 x 210 | Led White / RGB | Touchscreen Exterior | 9 kW 230 / 400 3~ |
| 72911 | 300 x 250 x 210 | Led White / RGB | Touchscreen Exterior | 10.5 kW 230 / 400 3~ |

# Innsbruck sauna

## DESCRIPTION

- Hemlock playwood panels 14 mm.
- Ergonomic benches and backrest of Abichi 21 mm.
- Secured transparent glass 8 mm.
- Wall mounted Harvia sauna heater.
- Outfoor touch control panel.
- Led light Warm White 3000 K.
- Ceiling led light with optional chromotherapy.

**The Innsbruck sauna can be made to order in the following woods:**

**- Standard wood: Hemlock Playwood**
**- Bench wood: Abichi**

| Dimensions (mm) | Code | Standard Pack | Standard weight in kg | Standard volume in $m^3$ |
|---|---|---|---|---|
| **Saunas** | | | | |
| 135 x 135 x 210 | 72901 | - | - | - |
| 180 x 180 x 210 | 72902 | - | - | - |
| 220 x 220 x 210 | 72903 | - | - | - |
| 260 x 220 x 210 | 72904 | - | - | - |
| 300 x 250 x 210 | 72905 | - | - | - |
| **Accessories** | | | | |
| Stainless steel accessories set | 70443 | un. | - | - |
| RGB Led lighting kit with remote control | 70445 | un. | - | - |
| Outside Wall finished with vertical playwood panels | To consult | lin.m | - | - |
| Salt decorative elements set | To consult | un. | - | - |
| Hidden heater | To consult | un. | - | - |
| Additional Wall for hidden heater | To consult | lin.m | | |

## TECHNICAL FEATURES

| Code | Dimensions (cm) | Light | Control Unit | Heater |
|---|---|---|---|---|
| 72901 | 135 x 135 x 210 | Led White / RGB | Touchscreen Exterior | 6 kW 230 / 400 3~ |
| 72902 | 180 x 180 x 210 | Led White / RGB | Touchscreen Exterior | 6 kW 230 / 400 3~ |
| 72903 | 220 x 220 x 210 | Led White / RGB | Touchscreen Exterior | 8 kW 230 / 400 3~ |
| 72904 | 260 x 220 x 210 | Led White / RGB | Touchscreen Exterior | 9 kW 230 / 400 3~ |
| 72905 | 300 x 250 x 210 | Led White / RGB | Touchscreen Exterior | 10.5 kW 230 / 400 3~ |

# Bella sauna

**The Bella sauna can be made to order in the following woods:**

**- Standard wood: Hemlock Playwood**
**- Bench wood: Thermo Aspen**

## DESCRIPTION

- Hemlock playwood panels 14 mm.
- Curved decorative elements of Thermo Aspen 21 mm.
- Benches of thermos Aspen 21 mm.
- Secured transparent glass 8 mm.
- Harvia design sauna heater.
- Outdoor touch control panel.
- Aromatherapy/Salt Metal Bowl.
- Led light warm white 3000 K.
- Option for glass ceiling.

| Dimensions (mm) | Code | Standard Pack | Standard weight in kg | Standard volume in m³ |
|---|---|---|---|---|
| **Saunas** | | | | |
| 180 x 180 x 210 | 72916 | - | - | - |
| 230 x 180 x 210 | 72917 | - | - | - |
| 230 x 230 x 210 | 72918 | - | - | - |
| 280 x 230 x 210 | 72919 | - | - | - |
| **Accessories** | | | | |
| Stainless steel accessories set | 70443 | un. | - | - |
| RGB Led lighting kit with remote control | 70445 | un. | - | - |
| Outside wall finished with vertical playwood panels | To consult | lin.m | - | - |
| Glass roof panel | To consult | sq.m | - | - |
| Heater safety railing | To consult | un. | - | - |

## TECHNICAL FEATURES

| Code | Dimensions (cm) | Light | Control Unit | Heater |
|---|---|---|---|---|
| 72916 | 180 x 180 x 210 | Led White / RGB | Touchscreen Exterior | 6.9 kW 230 / 400 3~ |
| 72917 | 230 x 180 x 210 | Led White / RGB | Touchscreen Exterior | 6.9 kW 230 / 400 3~ |
| 72918 | 230 x 230 x 210 | Led White / RGB | Touchscreen Exterior | 10.5 kW 230 / 400 3~ |
| 72919 | 280 x 230 x 210 | Led White / RGB | Touchscreen Exterior | 10.5 kW 230 / 400 3~ |

# Lobos sauna

## DESCRIPTION

- Hemlock playwood panels 14 mm.
- Benches of Abachi 21 mm.
- Secured transparent glass 8 mm.
- Exclusive Harvia sauna heater.
- Outfoor touch control panel.
- Led light Warm White 3000 K.

**The Lobos sauna can be made to order in the following woods:**

**- Standard wood: Hemlock Playwood**
**- Bench wood: Abichi**

| Dimensions (mm) | Code | Standard Pack | Standard weight in kg | Standard volume in m³ |
|---|---|---|---|---|
| **Saunas** | | | | |
| 134 x 254 x 210 | 72913 | - | - | - |
| 194 x 195 x 210 | 72914 | - | - | - |
| 254 x 254 x 210 | 72915 | - | - | - |
| **Accessories** | | | | |
| Stainless steel accessories set | 70443 | un. | - | - |
| Salt decorative elements set | 70444 | un. | - | - |
| Remote control kit for RGB LED colours | 70445 | un. | - | - |
| Outside wall finished with vertical timber panels | 70447 | lin.m | - | - |
| Roof extension | 70448 | sq.m | - | - |
| Tintes/transparent glass window | 70449 | sq.m | - | - |

## TECHNICAL FEATURES

| Code | Dimensions (cm) | Light | Control Unit | Heater |
|---|---|---|---|---|
| 72913 | 134 x 254 x 210 | Led White / RGB | Touchscreen Exterior | 6 kW 230 / 400 3~ |
| 72914 | 194 x 195 x 210 | Led White / RGB | Touchscreen Exterior | 8 kW 230 / 400 3~ |
| 72915 | 254 x 254 x 210 | Led White / RGB | Touchscreen Exterior | 9 kW 230 / 400 3~ |

# Sauna accessories

70443

70444

70446

70447

70450
70451

70453

70456

70457

2nd full glass side

Heater safety railing

## TECHNICAL FEATURES

| Code | Accessory type | Measure | CLASSIC | MIRAMONTE | INNSBRUCK | ST.MORITZ | LOBOS | BELLA |
|---|---|---|---|---|---|---|---|---|
| 70443 | Stainless steel sauna accessories set | un. | optional | optional | optional | optional | optional | optional |
| 70444 | Salt decorative elements set | un. | optional | optional | optional | optional | optional | N/A |
| 70445 | RGB Led lighting kit with remote control | un. | optional | optional | optional | optional | optional | optional |
| 70446 | Touchscreen control unit for sauna heater | un. | optional | Standard | Standard | Standard | Standard | Standard |
| 70447 | Outside wall finished with vertical timber panels | lin.m. | optional | optional | optional | optional | optional | optional |
| 70448 | Roof extension | sq.m. | optional | optional | optional | optional | optional | optional |
| 70449 | Tintes / transparent glass window | sq.m. | optional | optional | optional | optional | optional | optional |
| 70450 | Concealed heater for sauna up to 300 x 250 cm | un. | optional | optional | optional | optional | optional | N/A |
| 70451 | Concealed heater for sauna more than 300 x 250 cm | un. | optional | optional | optional | optional | optional | N/A |
| 70452 | Additional wall for hidden heater | lin.m. | optional | optional | optional | optional | optional | N/A |
| 70453 | Aroma dosing system | un. | optional | optional | optional | optional | optional | optional |
| 70456 | Decorative wall protection made of stones | un. | optional | optional | optional | optional | optional | N/A |
| 70457 | RGB Chromo therapy kit with remote control | un. | optional | optional | optional | optional | optional | N/A |
| Request | 2nd full glass side | sq.m. | N/A | N/A | N/A | N/A | optional | optional |
| Request | Glass roof panel | sq.m. | optional | optional | optional | optional | optional | optional |
| Request | Heater safety railing | un. | Standard | optional | Standard | Standard | Standard | optional |

Standard: Included with sauna code.
Optional: Additional code.
N/A: Not available.

# Harvia Helix steam generators

## DESCRIPTION

Includes control panel and temperature sensor.

| | Code | Standard Pack | Standard weight in kg | Standard volume in m³ |
|---|---|---|---|---|
| **Steam generator Harvia Helix** | | | | |
| 4.5 kW | HGX45XW | 1 | - | - |
| 6 kW | HGX60XW | 1 | - | - |
| 9 kW | HGX90XW | 1 | - | - |
| 11 kW | HGX110XW | 1 | - | - |
| 15 kW | HGX150XW | 1 | - | - |

# Harvia Helix Pro steam generators

## DESCRIPTION

Includes control panel, temperature sensor, automatic discharge valve and fragrance pump.

| | Code | Standard Pack | Standard weight in kg | Standard volume in m³ |
|---|---|---|---|---|
| **Steam generator Harvia Helix Pro** | | | | |
| 22 kW | HGP220XW | 1 | - | - |
| 30 kW | HGP300XW | 1 | - | - |
| Auto Clean Valve Harvia | 60328 | 1 | - | - |

# Steam Pack

## DESCRIPTION

The new generation of Steam room equipment. Single unit with metal structure. Compact design. Easy and simple installation.

| Description | Heating (kW) |
|---|---|
| Steam pack for room 2-5 m³ | 4.5 kW 230/400V 3~ |
| Steam pack for room 3-8 m³ | 5.7 kW 230/400V 3~ |
| Steam pack for room 6-12 m³ | 9 kW 230/400V 3~ |
| Steam pack for room 10-15 m³ | 10.8 kW 230/400V 3~ |
| Steam pack for room 12-20 m³ | 15 kW 230/400V 3~ |
| Steam pack for room 20-29 m³ | 22 kW 230/400V 3~ |
| Steam pack for room 20-29 m³ | 30 kW 230/400V 3~ |

# Harvia Vega sauna heater

## DESCRIPTION

Stones included.

| | Code | Standard Pack | Standard weight in kg | Standard volume in m³ |
|---|---|---|---|---|
| **Harvia Vega sauna heater** | | | | |
| 4.5 kW | 61387 | 1 | - | - |
| 4.5 kW E | 61388 | 1 | - | - |
| 6 kW | 61389 | 1 | - | - |
| 6 kW E | 61390 | 1 | - | - |
| 8 kW | 60323 | 1 | - | - |
| 8 kW E | 60325 | 1 | - | - |
| 9 kW | 60324 | 1 | - | - |
| 9 kW E | 60326 | 1 | - | - |

# Xenio Control

## DESCRIPTION

Harvia Xenio is a control unit with a touch control panel. Xenio provides a modern and subtly stylish user interface for controlling the heart of the sauna, the heater. The stylishly small yet clear touch control panel is easy to install where you want it: in the sauna, the shower room, the dressing room, or even the living room. The control panel enables you to see with just one look when your sauna is at the right temperature for you.

| | Code | Standard Pack | Standard weight in kg | Standard volume in m³ |
|---|---|---|---|---|
| XENIO 110 max. for 11 kW electric heathers | 74733 | 1 | - | - |
| XENIO 170 for up to 17 kW heaters | 72500 | 1 | - | - |

FLUIDRA

Notes

FLUIDRA

Notes

**FLUIDRA**
Avda. Alcalde Barnils 69 | 08174 Sant Cugat del Vallés (Barcelona) | Spain

Code: **WL210556-24**